Executive Order VR-203-M
VST Phase II EVR System

EXHIBIT 1[1]

Hanging Hardware
Equipment List

Component	*Manufacturer / Model*
Nozzle	VST Model VST-EVR-NB, VST-EVR-NB (Rebuilt) Or EMCO Models A4005EVR, RA4005EVR (Rebuilt) (Figure 1A-1)
Coaxial Curb Hose	VST Model VDV-EVR Series Or Goodyear Model Maxxim Premier Plus *("NV" stamped on nozzle end)* (Figure 1A-2)
Coaxial Whip Hose	VST Model VSTA-EVR Series Or Goodyear Model Maxxim Premier Plus (Figure 1A-2)
Breakaway Coupling	VST Model VSTA-EVR-SBK, VSTA-EVR-SBK (Rebuilt) Or EMCO Model A4119EVR (Figure 1A-2)

Allowable Hanging Hardware Combinations

	Nozzle		Hose		Breakaway	
Processor	VST	EMCO	VST	Goodyear	VST	EMCO
VST Membrane	●		●	●	●	
Veeder Root Vapor Polisher	●	●	●	●	●	●
FFS Clean Air Separator	●		●	●	●	
Hirt VCS 100	●	●	●	●	●	●

[1] The local air district may require a permit application when changing between alternate components.

ONLY ONE OF THE FOLLOWING FOUR (4) PROCESSOR GROUPS IS REQUIRED

VST - Membrane
Processor Equipment List #1

Component	*Manufacturer / Model*
Veeder-Root TLS-350 Series, including but not limited to TLS-350, TLS-350 Plus, TLS-350R, Red Jacket ProMax, Gilbarco EMC consoles	Veeder-Root 8482XX-XXX, 8470XX-XXX, Promax 847097-XXX EMC PAO2620X000X X = Any digit
RS232 Interface Module	Veeder-Root RS232 Interface Module Series (Figure 1A-3)
VST Membrane Processor	VST Model VST-ECS-CS3-XXX (Figure 1A-4) where XXX represents motor phase and HC Sensor 110 =Single-Phase with HC Sensor 310=Three-Phase with HC Sensor
Pressure Management Control (PMC) Software Version Number	1.04
Vapor Pressure Sensor (1 per GDF)	Veeder-Root 331946-001 (Figure 1A-5)
Multiport Card	Veeder-Root 330586-018

Veeder-Root - Vapor Polisher
Processor Equipment List #2

Component	Manufacturer / Model
Veeder-Root TLS-350 Series, including but not limited to TLS-350, TLS-350 Plus, TLS-350R, Red Jacket ProMax, Gilbarco EMC consoles	Veeder-Root 8482XX-XXX, 8470XX-XXX, Promax 847097-XXX EMC PAO2620X000X X = Any digit
RS232 Interface Module	Veeder-Root RS232 Interface Module Series (Figure 1A-3)
Veeder-Root Vapor Polisher	Veeder Root Vapor Polisher 332761-002 (Figure 1A-6)
PMC Software Version Number	1.04
Vapor Pressure Sensor **(1 per GDF)**	Veeder-Root 331946-001 (Figure 1A-5)
Smart Sensor Interface Module **(1 per GDF)** With Atmospheric Sensor	Veeder-Root 329356-004 (Figure 1A-7) Veeder-Root 332250-001
TLS RF Console-2 Box[2] (1 per GDF)	Veeder-Root 332242-002 (Figure 1A-8)
RF Transmitter-2[2] (1 per Vapor Polisher)	Veeder-Root 332235-016 (Figure 1A-8)
RF Transmitter Battery Pack[2] **(**1 per Transmitter)	Veeder-Root 332425-011 (Figure 1A-8)
RF Repeater-2[2] (1 per GDF)	Veeder-Root 332440-030 (Figure 1A-8)
RF Receiver-2[2] (1 per GDF)	Veeder-Root 332440-029 (Figure 1A-8)
Universal Enclosure Kit[2]	Veeder-Root 330020-716 (Figure 1A-8)

[2] Optional wireless components for Veeder-Root Vapor Polisher

Hirt - Thermal Oxidizer
Processor Equipment List #3

Component	Manufacturer / Model
Hirt Thermal Oxidizer With Indicator Panel	Hirt Model VCS 100 (Figure 1A-9) Leg Attachments: 5” – M39 48”- M40
Hirt 1/4" Check Valve (optional component)	Hirt P65

Franklin Fueling Systems - Healy Clean Air Separator
Processor Equipment List #4

Component	Manufacturer / Model
Franklin Fueling Systems Clean Air Separator	Healy Model 9961 Clean Air Separator (Figures 1A-10 and 1A-11) Healy Model 9961H Clean Air Separator (Figures 1A-12 and 1A-13)

Liquid Condensate Trap
Equipment List

Component	Manufacturer / Model
Riser Adapter	INCON model TSP-K2A (Figure 1A-14)
In-Line Filter	140 micron, Swagelok B-4F2-140 or SS-4F2-140, or equivalent (Figure 1A-14)
Screen	Aluminum Insect screen (18X14 mesh), or Stainless Steel Insect screen (18X18 mesh). (Figure 1A-14)
Stainless Steel Hose Clamp	Sized to secure screen to suction tube. (Figure 1A-14)
Liquid Sensor[3]	Must have an audible and visual alarm (Figure 1A-14)
Liquid Condensate Trap[3]	Any capacity, manufacturer, make and model (Figure 1A-14)

[3]Must meet applicable State Water Resources Control Board requirements (*e.g.* LG-113, LG-167 and LG-169) and any local authority having jurisdiction which includes the Certified Unified Program Agency (CUPA

Figure 1A-1
VST Model VST-EVR- NB Nozzle

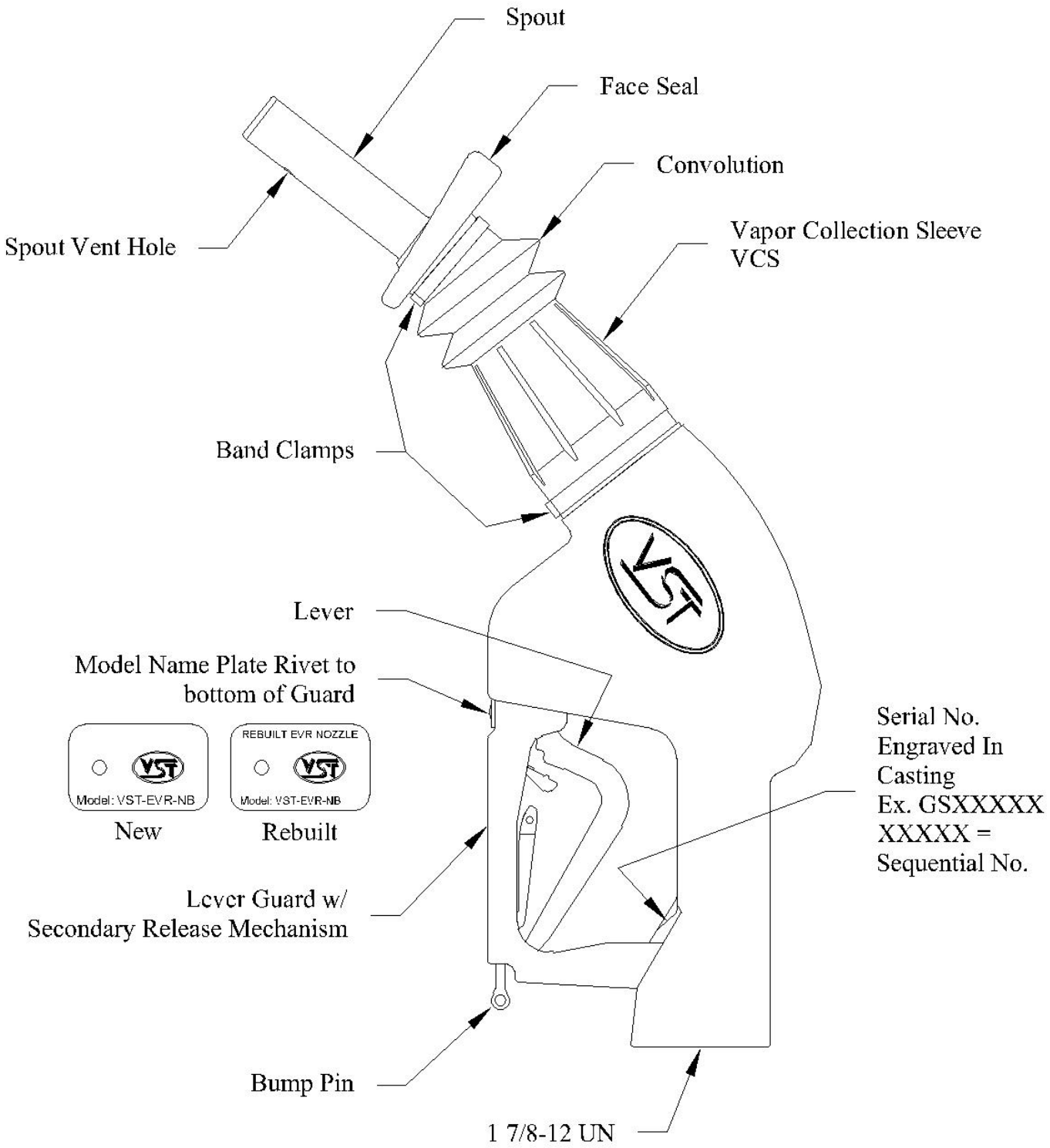

Figure 1A-1 (continued)
EMCO Model A4005EVR Nozzle

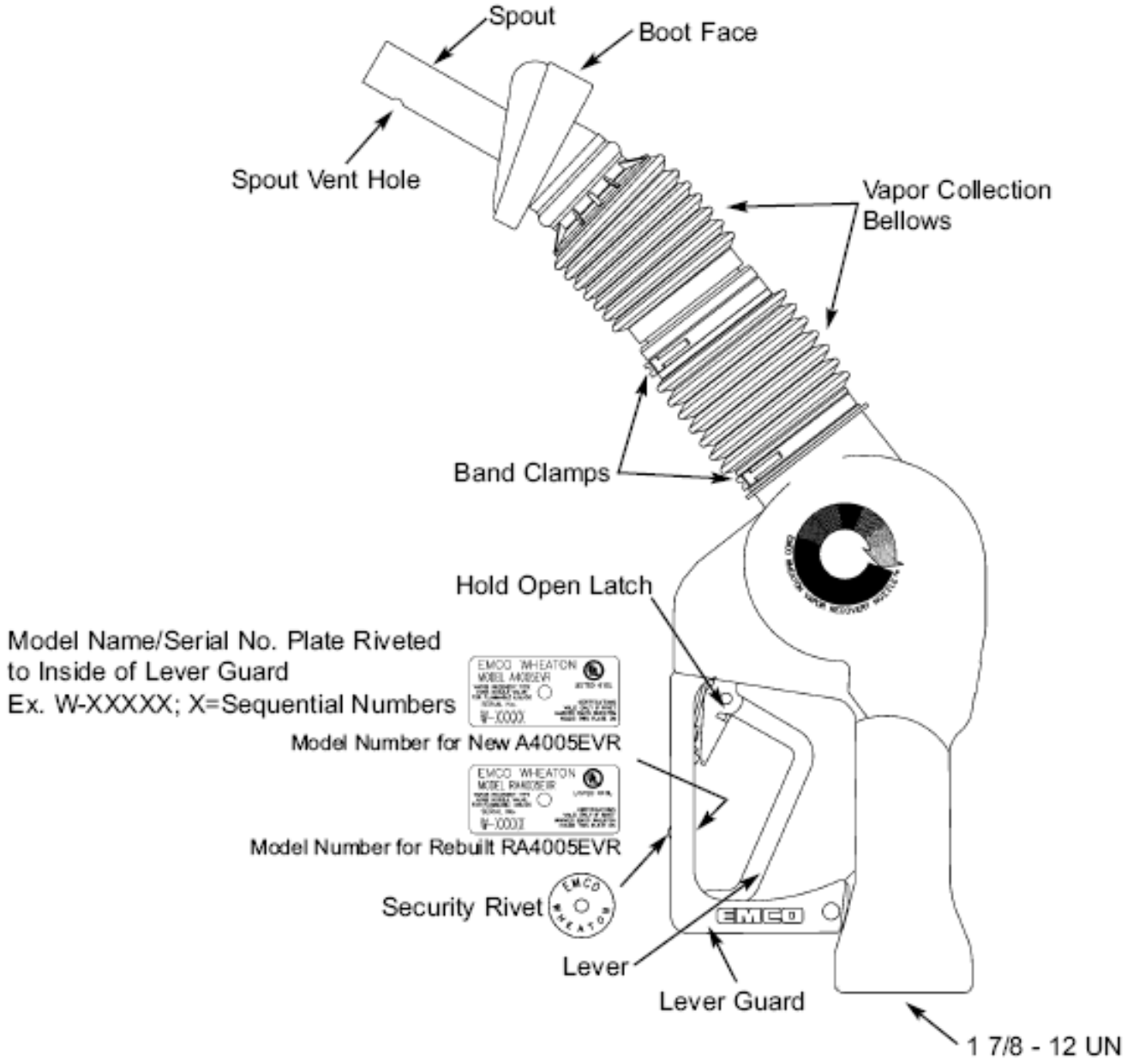

Figure 1A-2
Hanging Hardware
(Nozzle, Coaxial Curb Hose, Breakaway, and Coaxial Whip Hose)

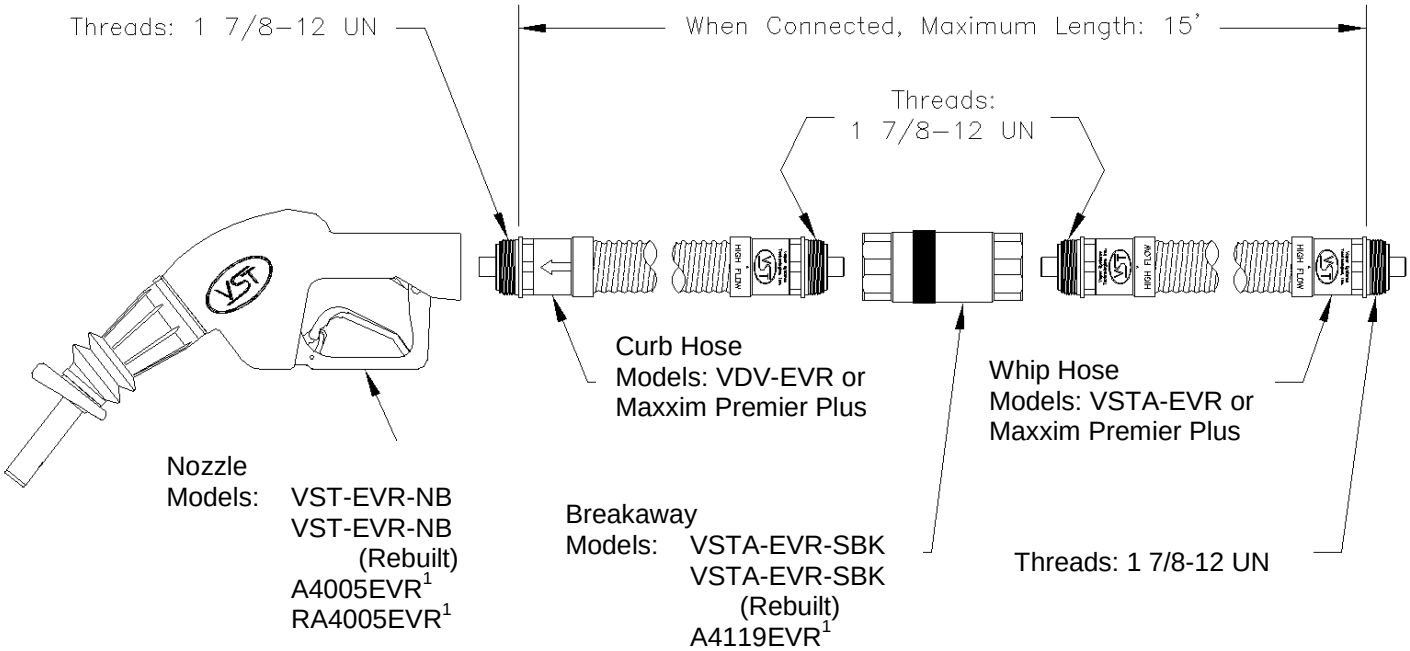

[1] Alternate component for use with the Veeder-Root Vapor Polisher or Hirt Thermal Oxidizer processors

Figure 1A-2 (continued)
VST Hanging Hardware
(Nozzle and Breakaway)

Vapor Systems Technologies, Inc.

Nozzle
VST Model VST-EVR-NB,
VST Model VST-EVR-NB (Rebuilt)

Vapor Systems
Technologies, Inc.

BREAKAWAY COUPLING
VST Model VSTA-EVR-SBK

Rebuilt Breakaway Coupling
VST Model VSTA-EVR-SBK

Figure 1A-2 (continued)
VST Hanging Hardware
(Coaxial Curb Hose and Coaxial Whip Hose)

Figure 1A-2 (continued)
EMCO Hanging Hardware
(Nozzle and Safe Break Valve)

EMCO Wheaton Retail

Nozzle
EMCO Model A4005EVR

EMCO Wheaton Retail

Safe Break Valve
EMCO Model A4119EVR

Figure 1A-2 (continued)
Goodyear Hanging Hardware
(Curb and Whip Hoses**)**

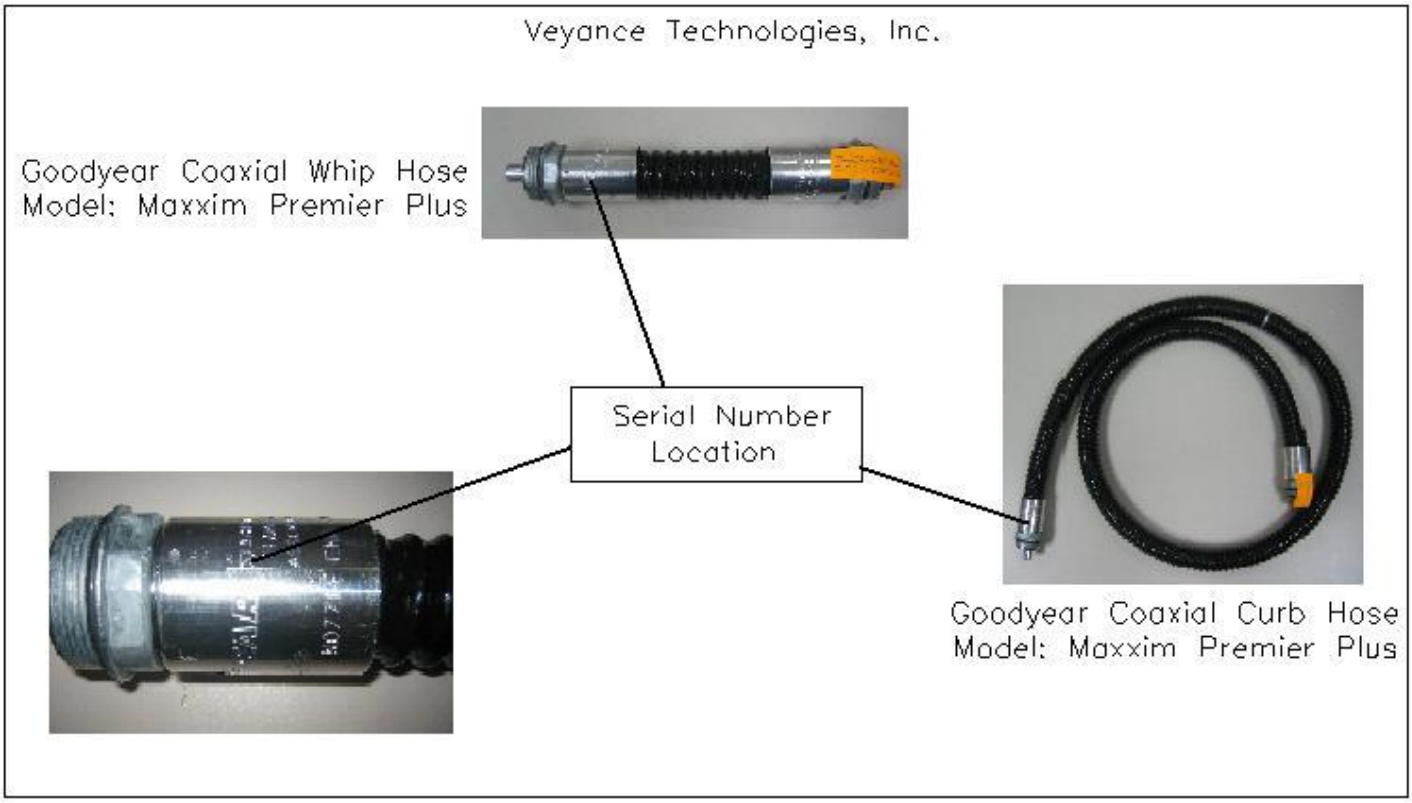

Figure 1A-3
Veeder-Root RS232 Interface Module Series
RS232 Interface Module

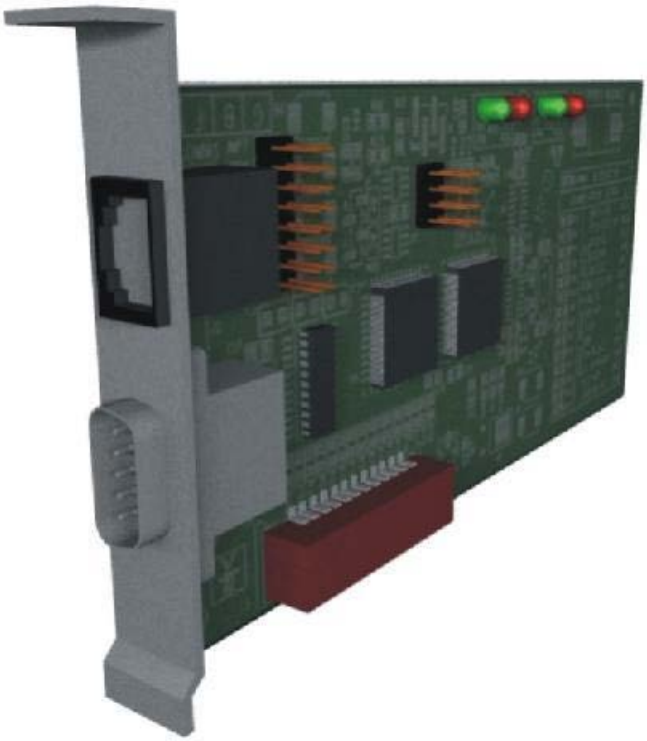

Figure 1A-4
Typical VST-ECS-CS3 Membrane Processor

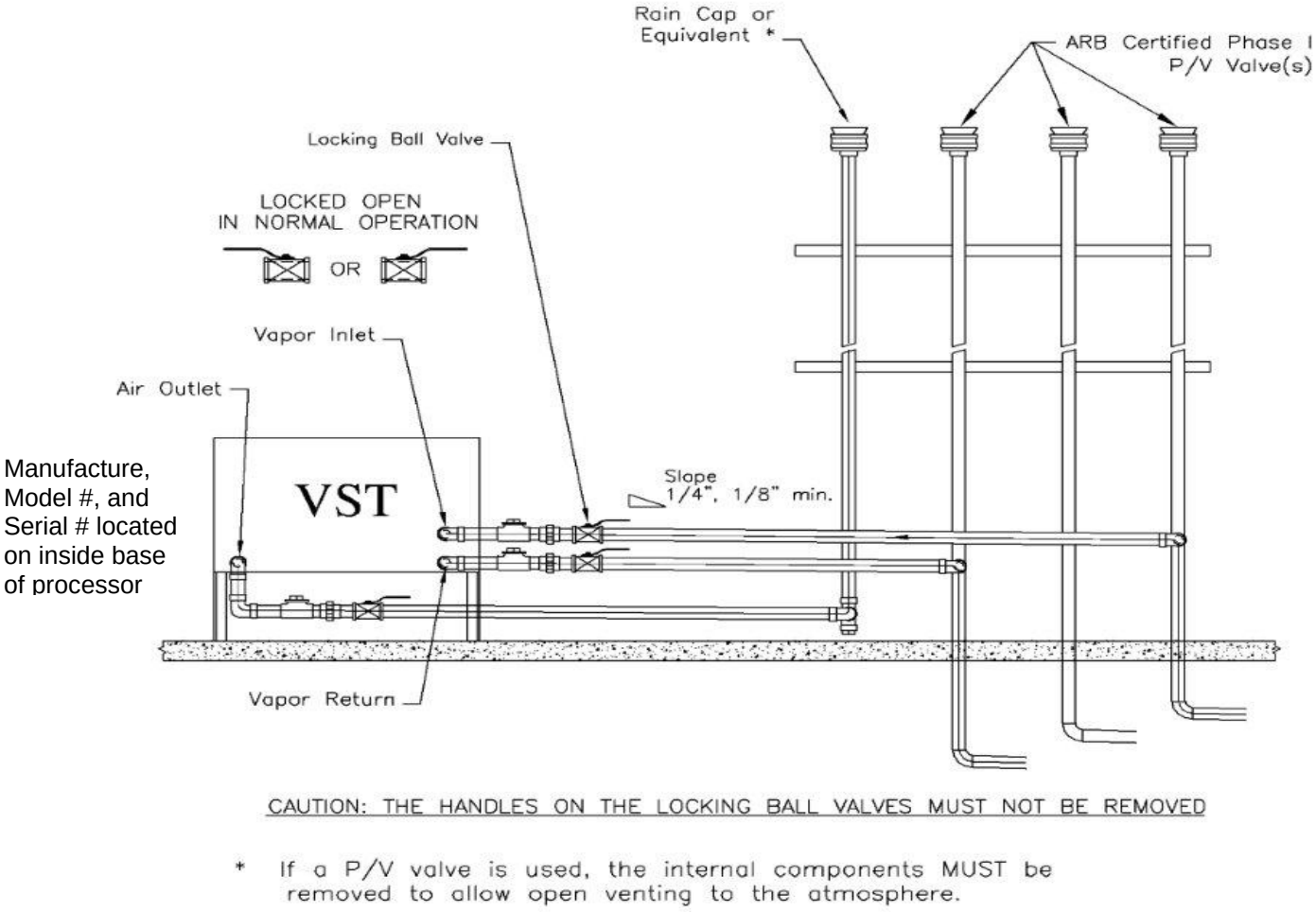

Figure 1A-5
Veeder-Root 331946-001
Vapor Pressure Sensor

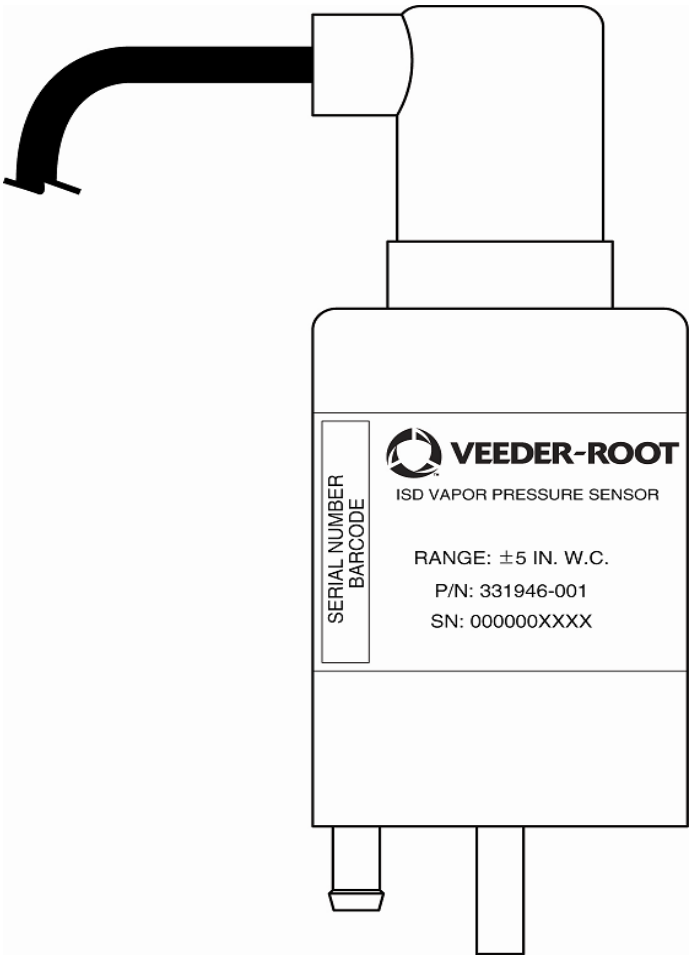

Figure 1A-6
Typical Veeder-Root Vapor Polisher

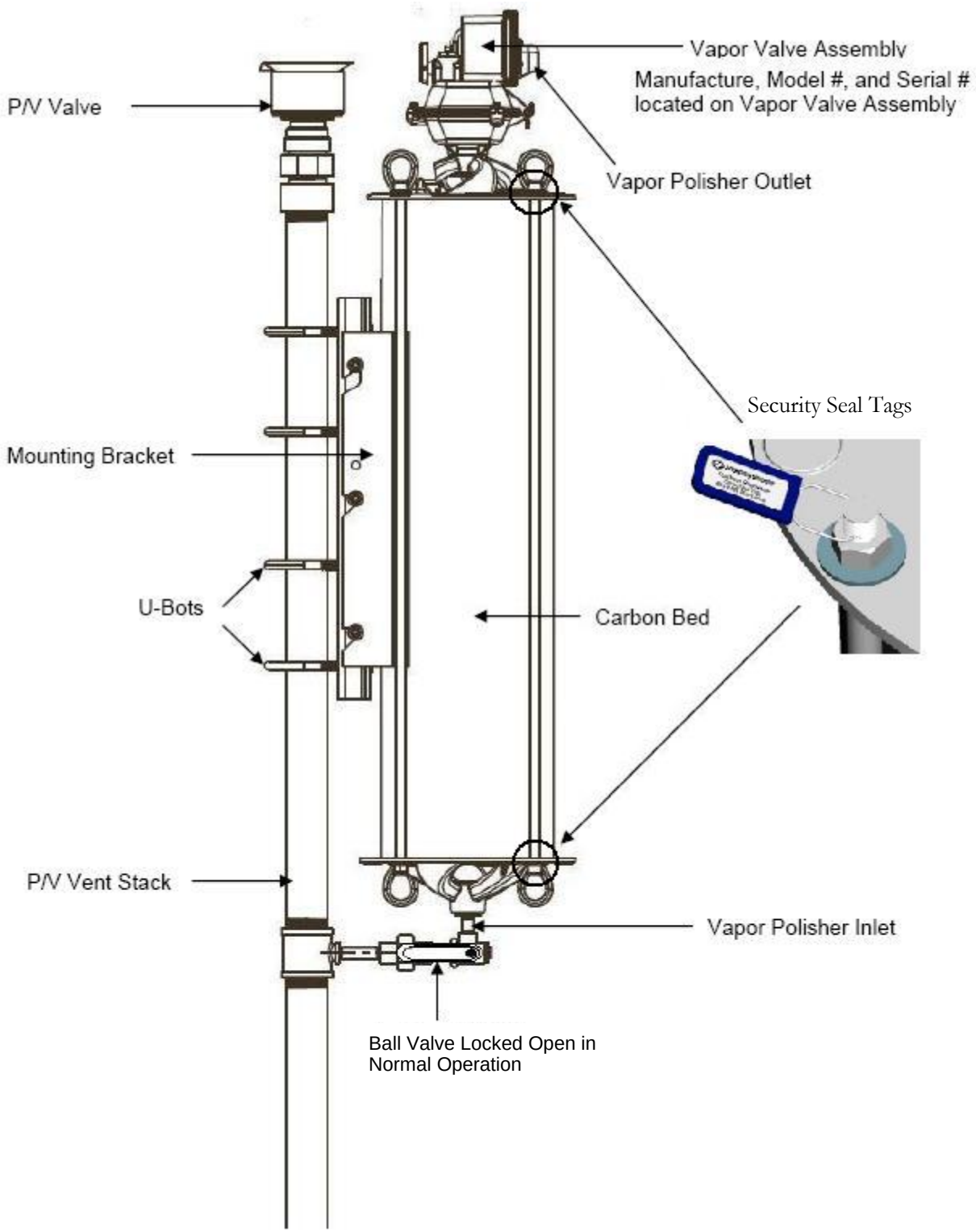

Figure 1A-7
Veeder-Root 329356-004, 332250-001
Smart Sensor Interface Module

Figure 1A-8
Wireless Components for Veeder-Root Vapor Polisher

Wireless TLS RF Console

Wireless Receiver

Wireless Repeater

Wireless Transmitter

Wireless Battery Pack

Wireless Enclosure

Figure 1A-8 (continued)
Typical Wireless Configuration for Veeder-Root Vapor Polisher

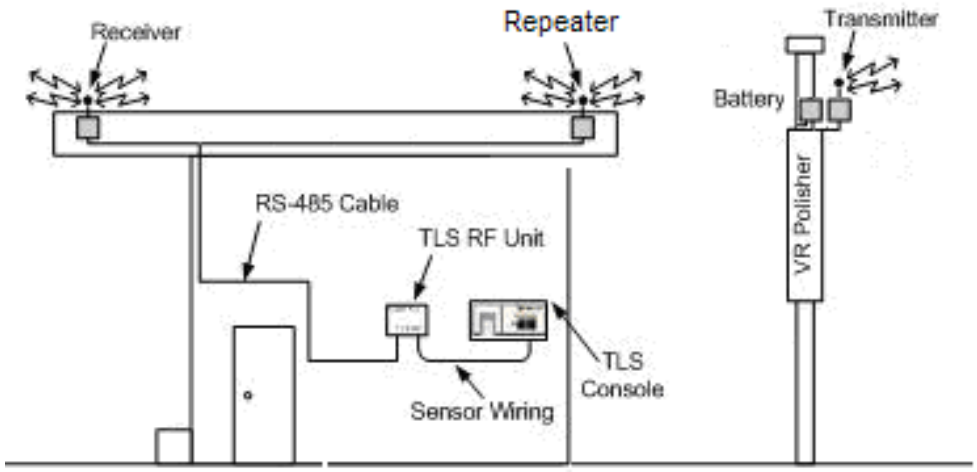

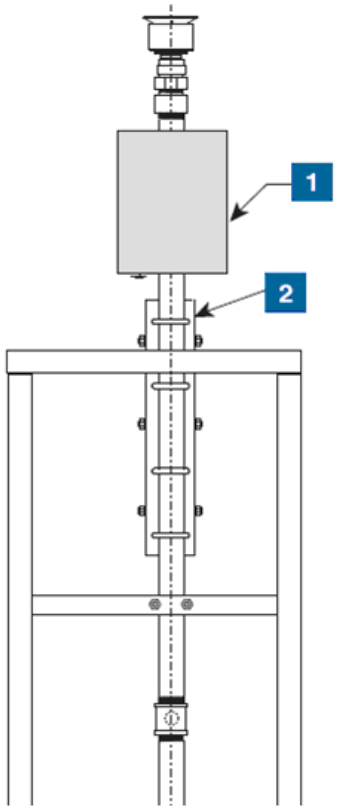

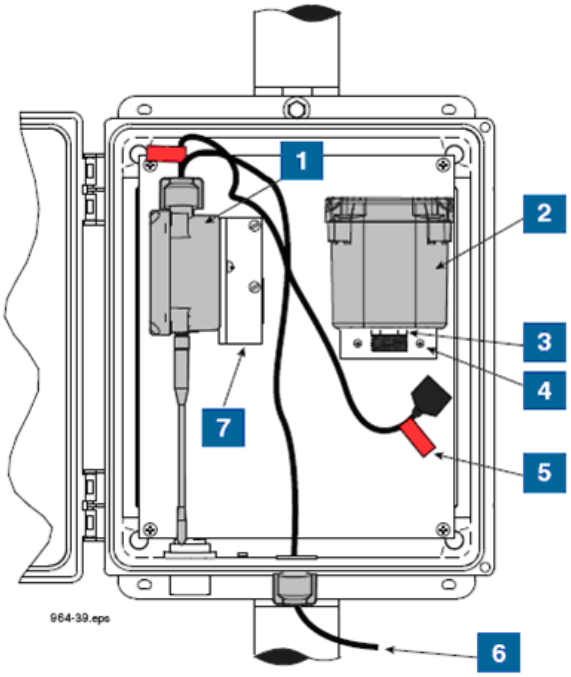

1. CCVP transmitter/battery enclosure on vent stack
2. CCVP support bracket

1. Transmitter
2. Battery pack
3. Thin hex nut
4. Attach Battery L bracket using two #10 taptite screws
5. Battery caution label attached to battery cable (2 places)
6. Cable from CCVP
7. Attached Transmitter L bracket using two #10 taptite screws

Figure 1A-9
Hirt VCS 100 Thermal Oxidizer and Indicator Panel

VCS 100 Identification Plate

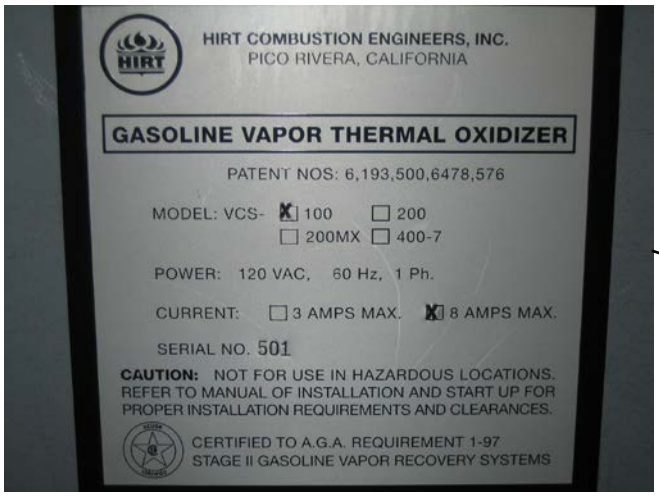

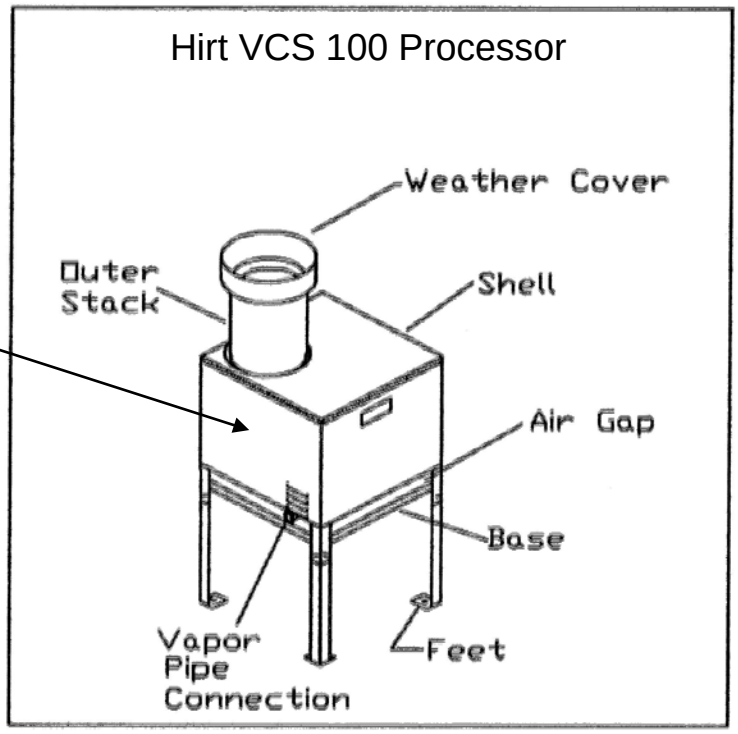

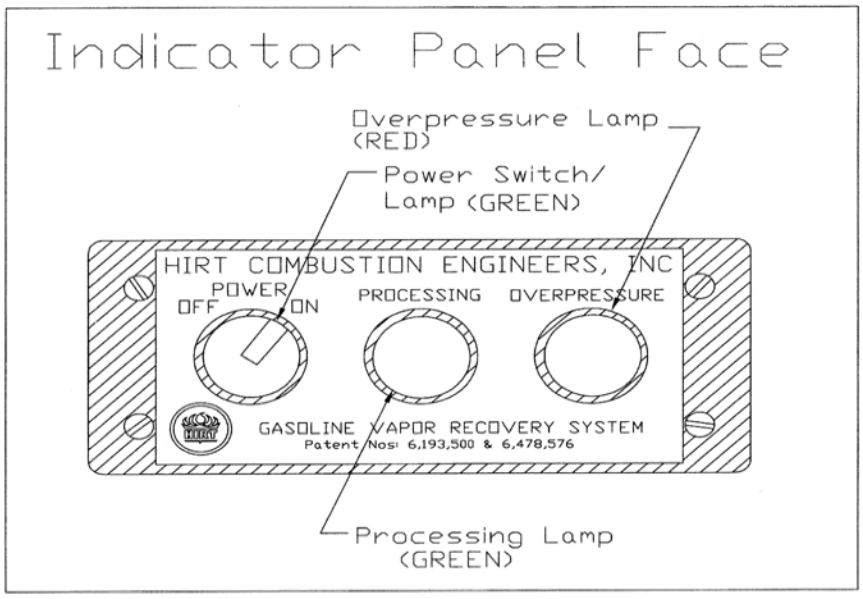

Figure 1A-9 (continued)
Typical Hirt VCS100 Thermal Oxidizer Processor

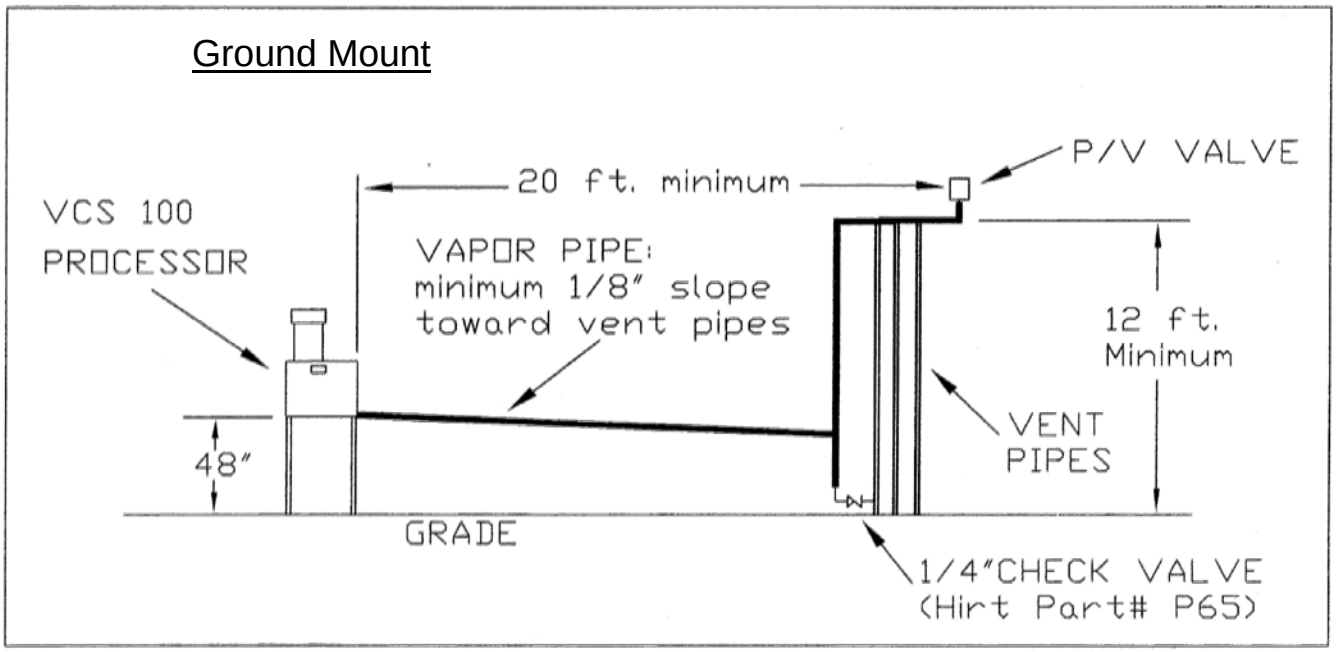

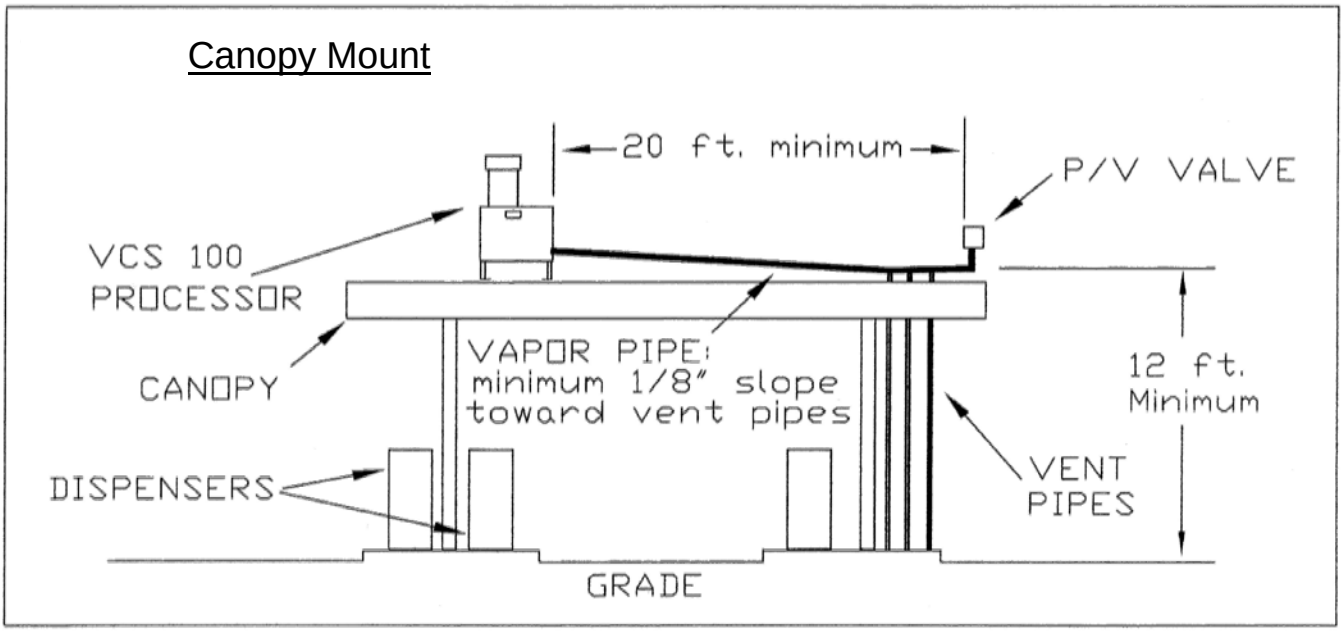

Figure 1A-10
Healy Model 9961 Clean Air Separator

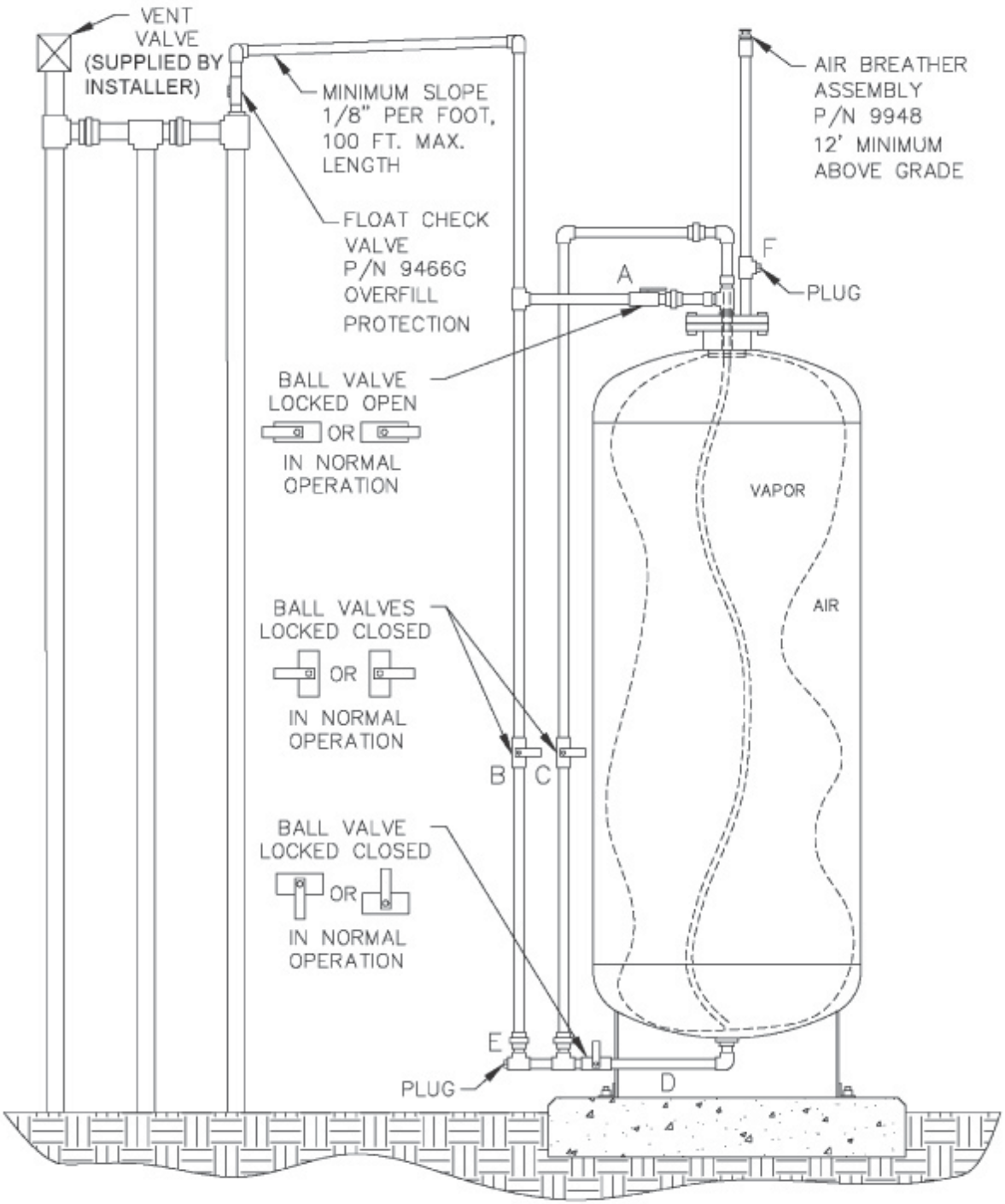

Figure 1A-11
Healy Model 9961 Clean Air Separator

Figure 1A-12
Healy Model 9961H Clean Air Separator

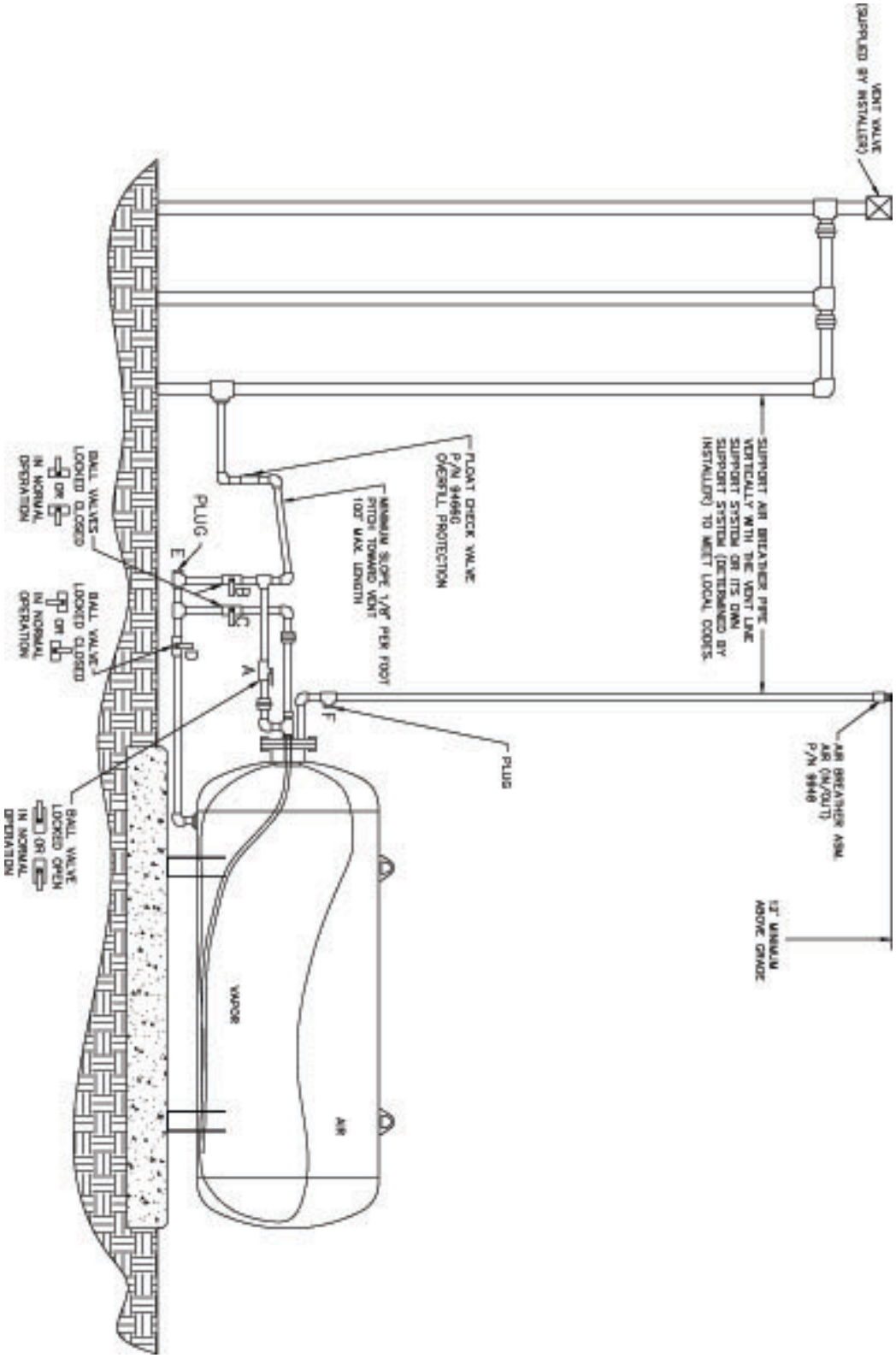

Figure 1A-13
Healy Model 9961H Clean Air Separator

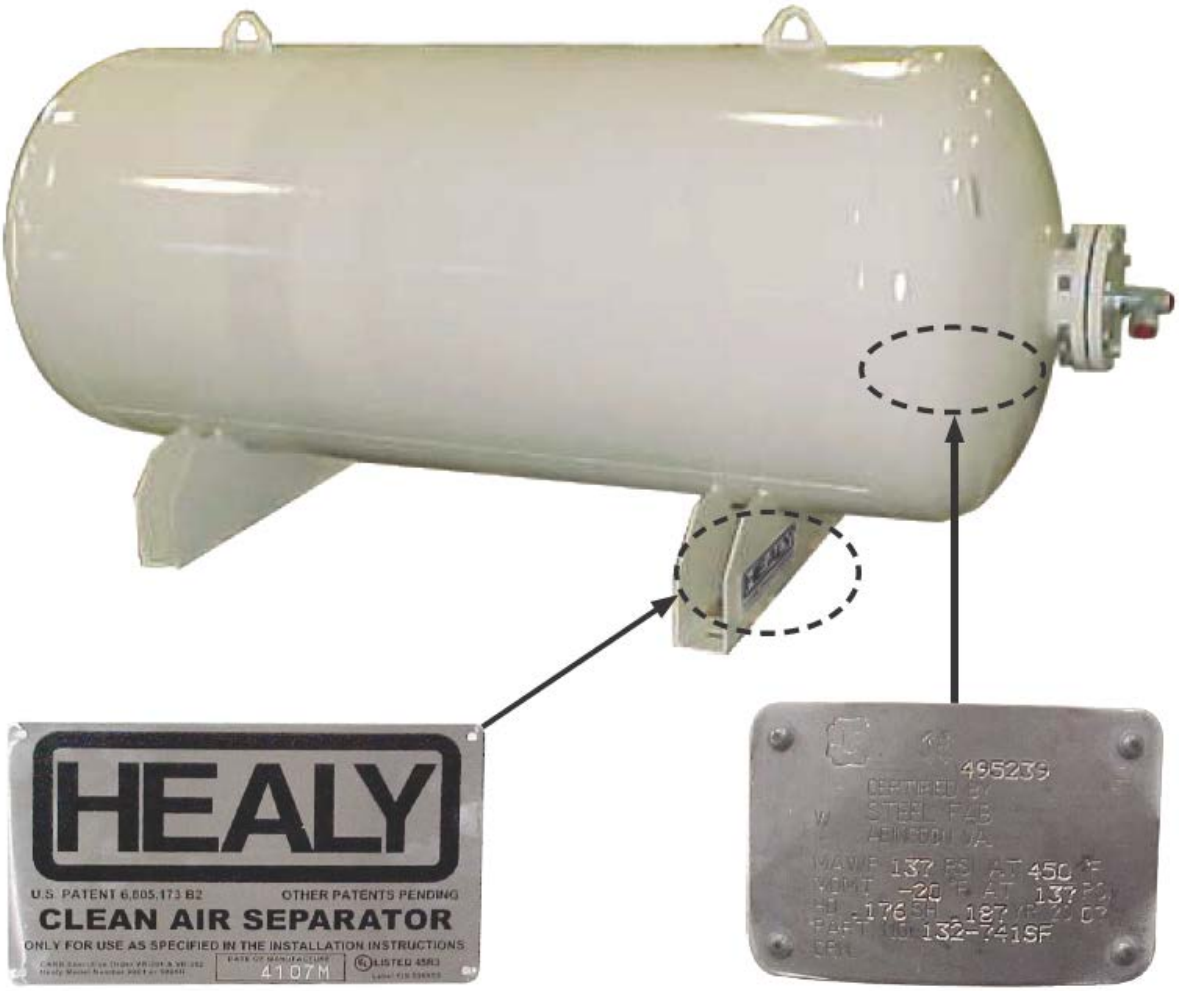

Clean Air Separator Name Plate

Clean Air Separator Data Plate
(not pictured on far side of base)

Figure 1A-14
Typical Liquid Condensate Trap Installed Below the Transition Sump

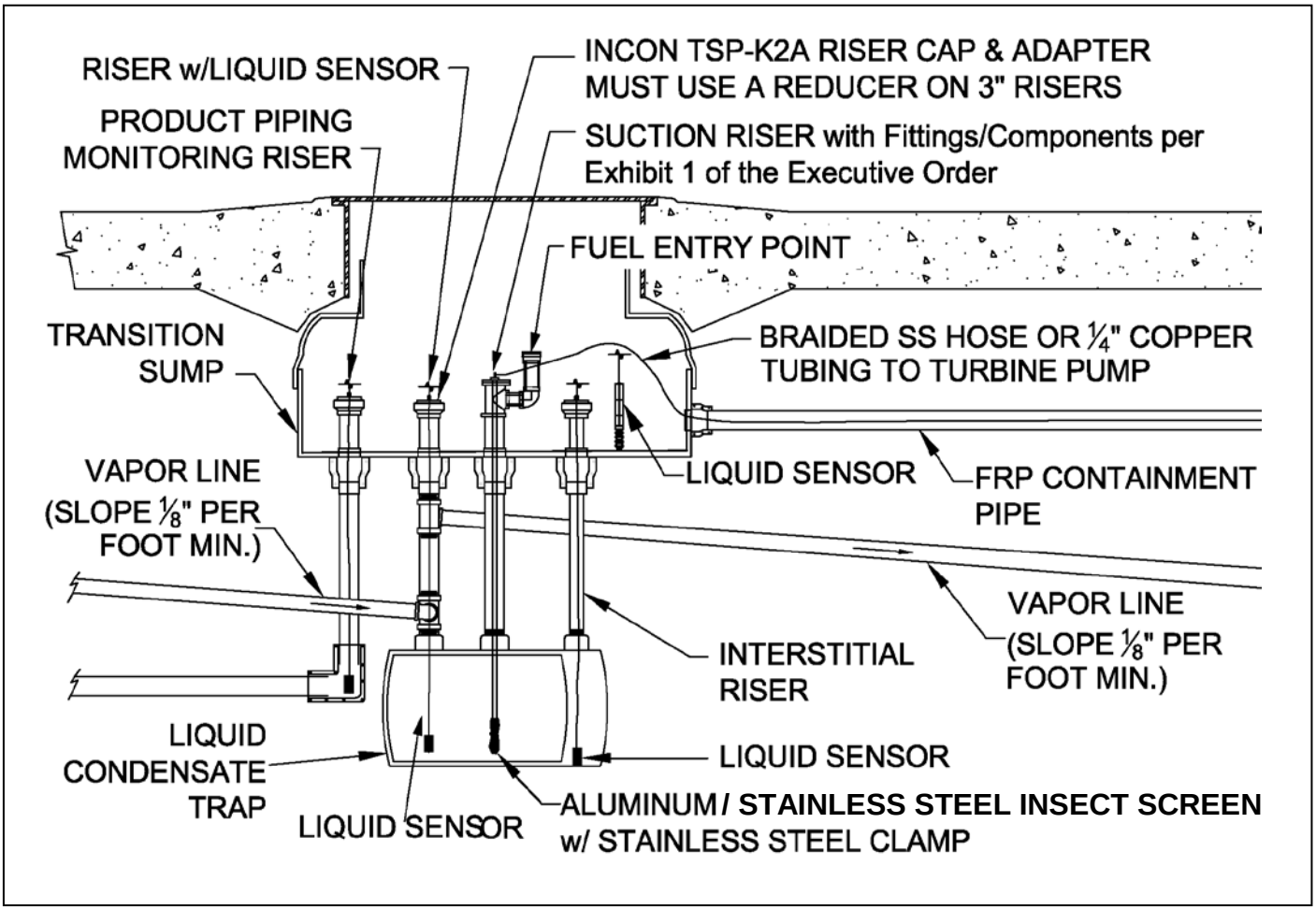

Figure 1A-14 (continued)
Typical Liquid Condensate Trap Installed Inside the Transition Sump
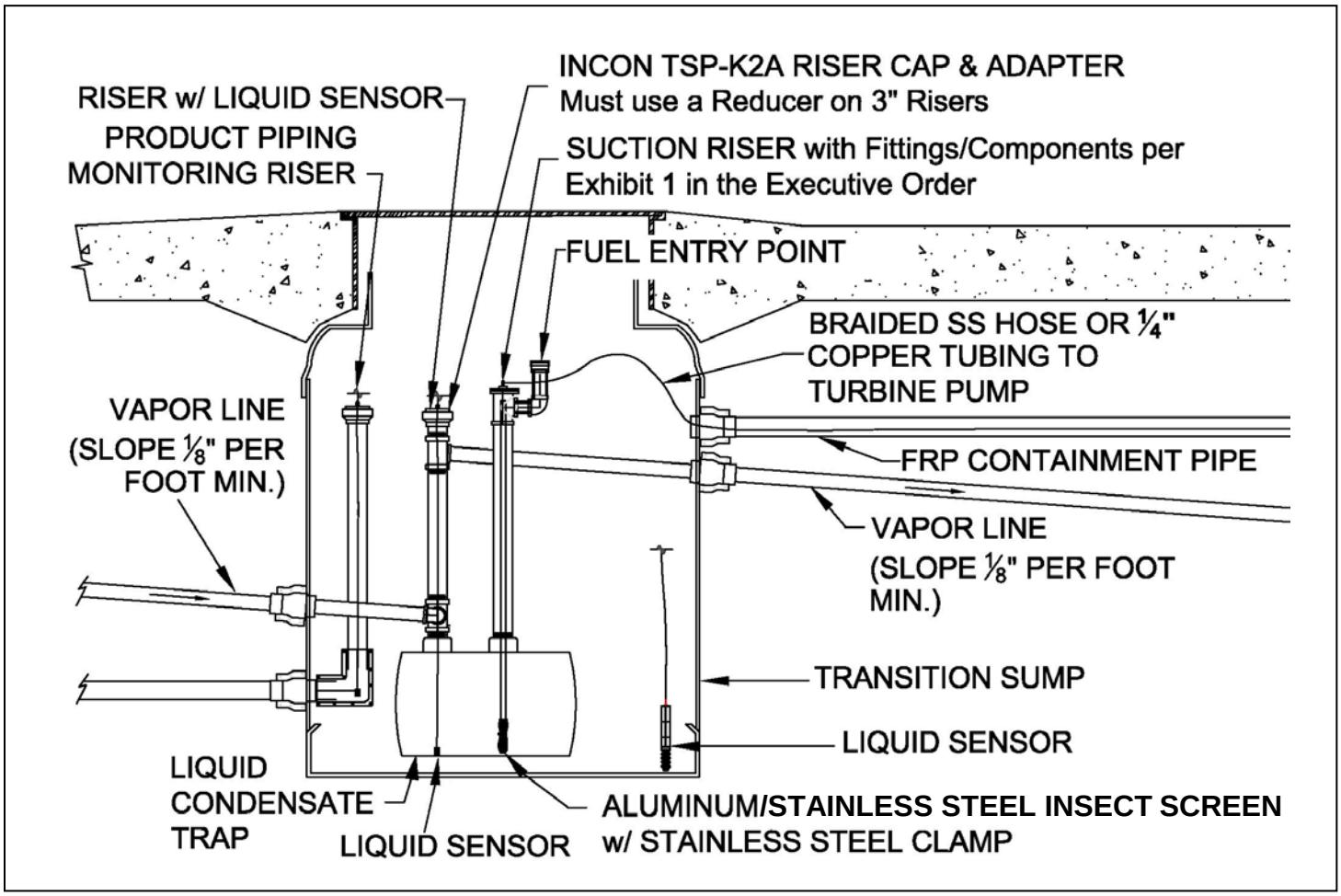
Note: A Liquid Condensate Trap installed inside a liquid AND vapor tight transition sump that is monitored with a liquid sensor can be single walled (if installed before July 1, 2004).