Executive Orders VR-203-T and VR-204-T
Balance Phase II EVR Systems

EXHIBIT 10

Veeder Root Vapor Pressure Sensor Verification Test Procedure

Definitions common to all certification and test procedures are in:

D-200 Definition for Vapor Recovery Procedures

For the purpose of this procedure, the term "ARB" refers to the California Air Resources Board, and the term, "ARB Executive Officer" refers to the Executive Officer of the ARB or his or her authorized representative or designee.

1. Purpose and Applicability

1.1 The purpose of this test procedure is to determine if the Veeder-Root Vapor Pressure Sensor (listed in Exhibit 1) is operating in accordance with the pressure sensor requirements of Exhibit 2. This procedure is used:

1.1.1 To determine the measured ullage pressure in underground gasoline storage tanks (USTs) and compare to the Veeder-Root Vapor Pressure Sensor (Vapor Pressure Sensor) reading at the TLS console.

1.1.2 To determine whether the Vapor Pressure Sensor complies with the performance specification when the sensor is exposed to ambient pressure.

1.2 This procedure is applicable for compliance testing.

1.3 The term "TLS Console" used throughout this Exhibit includes but is not limited to TLS-350, TLS-350 Plus, TLS-350R, Red Jacket ProMax, Gilbarco EMC consoles which are also referenced in Exhibit 1.

2. Principle and Summary of Test Procedure

Determining UST Pressure –
If the Vapor Pressure Sensor is installed on the vapor return line of a dispenser closest to the USTs, the pressure of the USTs is determined at the Phase I vapor recovery adaptor (dry break assembly) with a vapor coupler test assembly as shown in Figures 2 and 3 of TP-201.3 (*Determination of 2 Inch WC Static Pressure Performance of Vapor Recovery Systems of Dispensing Facilities*) or a modified dust cap test assembly as shown in Figures 10-1 and 10-2 of this exhibit. The modified dust cap test assembly is equipped with a center probe, which opens the dry break, and a quick connect fitting that is connected to an electronic pressure measuring device or digital manometer. The modified dust cap test assembly should open the dry break with minimal venting of the USTs. This test can be performed while product is being dispensed into motor vehicles.

If the Vapor Pressure Sensor is installed on the vent stack, the pressure of the USTs is determined at the vent stack test port as shown in Figure 10-6. The vent stack test port is equipped with a quick connect fitting that is connected to an electronic pressure

measuring device or digital manometer. This test can be performed while product is being dispensed into motor vehicles.

Determining Ambient Pressure - The Vapor Pressure Sensor is subjected to ambient pressure by turning the Vapor Pressure Sensor valve, which is located on the vent stack or in the dispenser closest to the tanks, to the atmospheric valve position as shown in Figure 10-3. This test can be performed while product is being dispensed into motor vehicles.

3. Biases and Interferences

3.1 This test shall not be conducted within 30 minutes following gasoline transfer from a cargo tank.

3.2 This test shall only be conducted when the processor is temporarily disabled. The following table provides instructions on how to disable each processor listed in the Executive Order.

Table 10-1: Instructions for Disabling the Processor

Processor	Instructions
Healy Clean Air Separator (CAS)	To isolate the Healy CAS from the UST system, all four ball valves shall be closed, as shown in Figures 10-9 and 10-10 (for horizontal configurations)
Hirt VCS 100	At the Hirt Indicator Panel, turn the Power Switch to the “Off” position as shown in Figure 10-13
Veeder Root Vapor Polisher	At the TLS Console, manually close the vapor valve in the PMC Diagnostic menu as shown in Figure 10-8
VST Membrane/ VST Green Machine	At the TLS Console, manually turn off the processor in the PMC Diagnostic menu as shown in Figure 10-7

3.3 The range of the Vapor Pressure Sensor is between positive (+5.0) and negative five (-5.0) inches water column. If the headspace of the underground storage tank is under a vacuum of greater than negative five inches water column (i.e.-6, -7, -8, etc.), the results of section 8.4 could be biased toward non compliance. Under such condition, the vacuum level should be relieved to a value between negative five and negative two inches water column by depressing the poppet of the Phase I vapor adaptor. Once an adequate amount of air has been ingested into the headspace, the remaining vacuum must be allowed to stabilize for a minimum of fifteen (15) minutes before taking a reading.

3.4 If the Vapor Pressure Sensor is located at the vapor return line of the dispenser, the UST pressure must be determined at the Phase I vapor adaptor as shown in Figures 10-1 and 10-2 of this exhibit.

3.5 If the Vapor Pressure Sensor is located at the vent stack, the UST pressure must be determined at the vent stack test port as shown in Figure 10-6.

3.6 If Veeder-Root's "Maintenance Tracker" is installed and enabled, access to the "diagnostic mode" and "set-up mode" of the TLS Console is prohibited unless a Maintenance Tracker Technician Key or personal computer equipped with Veeder-Root's ISD Setup Tool Software Version 1.09 or higher is made available. Maintenance Tracker is an optional security device designed to prevent unauthorized tampering and clearing of Veeder-Root tank monitoring and ISD alarms. Maintenance Tracker resides within the TLS console and when enabled, a message will appear on the two line display of the TLS console. For additional instructions on how to access the desired parameters to complete this test procedure, see Exhibit 18; "Accessing PMC and ISD Parameters at Gasoline Dispensing Facilities (GDFs) with Veeder-Root's "Maintenance Tracker" Security Feature Installed & Enabled".

3.7 The vapor pressure sensor value observed at the TLS console is refreshed at the frequency defined in Table 10-2. Prior to simultaneously recording the values observed at the digital manometer and the TLS console, the technician should wait until the value the TLS console is refreshed.

Table 10-2: Vapor Pressure Sensor Refresh Rate

Veeder-Root Vapor Pressure Sensor Configuration	TLS Console Refresh Rate
Wired	~10 seconds
Wireless	~60 seconds

4. Range and Accuracy

4.1 A digital (electronic) manometer with 0.01 inches WC, or better, resolution. The sensor must have a minimum measuring range of +/- 10 inches WC. The sensor must also be accurate to 0.05 inches WC for any pressure measurement made during the prescribed tests. For a manometer with a +/- 10 inches WC measurement range, this requires a 0.25% basic accuracy.

5. Equipment

5.1 If the Vapor Pressure Sensor is located at the vapor return line of the dispenser closest to the USTs, the Phase I vapor adaptor dust cap test assembly shall be modified in the following manner:

5.1.1. Install a probe in the center of the dust cap as shown in Figure 10-1 (one method is to tap and thread probe). The probe shall be of sufficient length to open approximately ½ inch of the dry break while allowing the cap to maintain a leak tight seal on the adaptor.

5.1.2. Install a female quick connect fitting on the top of the dust cap, offset from the center probe as shown in Figure 10-1. A Swagelok, part number SS-QC4-B-4-PM, quick connect fitting or equivalent can be used.

5.1.3. Use “Tygon tubing” or equivalent to connect the manometer to the dust cap (Figure 10-2). Install a male quick connect fitting (Swagelok part number SS-QC4-5-400 or equivalent can be used) on one end of a ferrule stainless steel tube (or equivalent material). Connect one end of the “Tygon tubing” to the stainless steel tube and connect the other end to the digital manometer (Figure 10-2).

5.2 Alternatively, the vapor coupler test assembly, Figures 2 and 3 of TP-201.3 may be used in lieu of the dust cap test assembly.

5.3 If the Vapor Pressure Sensor is installed at the vent stack, the following test assembly is required:

5.3.1 A test port and female quick connect fitting shall be installed on the plumbing fixture below the Vapor Pressure Sensor enclosure as shown in Figure 10-6. A Swagelok, part number SS-QC4-PM, quick connect fitting or equivalent can be used.

5.3.2 Use “Tygon tubing” or equivalent to connect the manometer to the test port (Figure 10-2). Install a male quick connect fitting (Swagelok part number SS-QC4-5-400 or equivalent can be used) on one end of a ferrule stainless steel tube (or equivalent material). Connect one end of the “Tygon tubing” to the stainless steel tube and connect the other end to the digital manometer (Figure 10-2).

5.3.3 Use various pipe fittings to accommodate the ¼ inch test port, including half inch NPT female tee fitting and half inch to quarter inch reducer, as shown in Figure 10-6.

5.4 Digital Manometer (Electronic Pressure Measuring Device)
See the requirements of Section 4.1 above.

6 Calibration Requirements

6.1 A copy of the most current calibration of the electronic pressure measuring device shall be kept with the equipment.

6.2 All electronic pressure measuring devices shall be bench tested for accuracy using a reference gauge, incline manometer or National Institute of Standards and Technology (NIST) traceable standard at least once every 180 consecutive days. Accuracy checks shall be performed at a minimum of three (3) points (e.g., 20, 50 and 80 percent of full scale) each for both positive and negative pressure readings. Accuracy shall meet the requirements of Section 4.

Determining UST Pressure

7 Pre-Test Procedure

7.1 Turn on digital manometer and allow instrument to warm up for five minutes.

7.2 Zero out digital manometer in accordance with manufacturer's instructions. Drift may be minimized by re-zeroing immediately after use by venting both pressure ports to atmosphere until the display reads exactly zero.

7.3 If the Vapor Pressure Sensor is located at the vapor return line of the dispenser, attach the male quick connect fitting to the female quick connect fitting on the modified dust cap test assembly.

If the Vapor Pressure Sensor is located at the vent stack, attach the male quick connect fitting to the female quick connect fitting on the vent stack test port.

7.4 Attach digital manometer to open end of Tygon tubing.

7.5 If the Vapor Pressure Sensor is installed at the vapor return line of the dispenser, attach the dust cap or vapor coupler test assembly to the Phase I vapor adaptor (Figure 10-2).

8 Test Procedure

8.1 If the headspace of the underground storage tank is under a vacuum of greater than negative five inches water column (i.e.-6, -7, -8 etc.), the vacuum should be relieved to a value between negative five and negative two inches water column as described in Section 3.3 above.

8.2 For gasoline dispensing facilities equipped with the VST Membrane Processor, VST Green Machine Processor, or Veeder Root Vapor Polisher Processor access the current vapor pressure sensor reading as indicated in Figure 10-4.

For gasoline dispensing facilities equipped with the Franklin Fueling Systems Healy Clean Air Separator or Hirt VCS 100 Thermal Oxidizer access the current vapor pressure sensor reading as indicated in Figure 10-5.

8.3 Simultaneously record the ullage pressure value from the digital manometer and the TLS Console. Record the above information on Form 1 "Data Form for Vapor Pressure Sensor UST Pressure Test." Districts may require the use of an alternate form, provided it includes the same minimum parameters as identified in the Data Form.

Note: The vapor pressure sensor value observed at the TLS console is refreshed at the frequency defined in Table 10-2. Prior to simultaneously recording the values observed at the digital manometer and the TLS console, the technician should wait until the value at the TLS console is refreshed.

8.4 Verify that the pressure reading from the TLS Console is within ±0.2 inches WC from the digital manometer reading. If difference is not within ±0.2 inches WC, the pressure sensor is not in compliance with the pressure sensor requirements of Exhibit 2.

8.5 If the gasoline dispensing facility is equipped with the VST Membrane Processor or the Veeder Root Vapor Polisher Processor, press the <MODE> key to leave the 'PMC DIAGNOSTIC' menu.

If the gasoline dispensing facility is equipped with the Franklin Fueling Systems Healy Clean Air Separator or Hirt VCS 100 Thermal Oxidizer, press the <MODE> key to leave the 'SMARTSENSOR DIAGNOSTIC' menu.

Determining Ambient Pressure

9 Test Procedure for Testing Sensor Under Ambient Pressure

9.1 Access the Vapor Pressure Sensor, which is located on the vent stack or in the dispenser closest to the tanks. Record pressure sensor location and serial number on the data form.

9.2 Remove the cap from the ambient reference port of the Vapor Pressure Sensor valve and open the valve to atmosphere by turning it 90 degrees so that the flow arrows point to both the Vapor Pressure Sensor sensing port and the ambient reference port (see Figure 10-3).

9.3 For gasoline dispensing facilities equipped with the VST Membrane Processor, VST Green Machine Processor, or Veeder Root Vapor Polisher Processor access the current vapor pressure sensor reading as indicated in Figure 10-4.

For gasoline dispensing facilities equipped with the Franklin Fueling Systems Healy Clean Air Separator or Hirt VCS 100 Thermal Oxidizer access the current vapor pressure sensor reading as indicated in Figure 10-5.

9.4 Simultaneously record the ullage pressure value from the digital manometer and the TLS Console. Record the above information on Form 1 "Data Form for Vapor Pressure Sensor UST Pressure Test." Districts may require the use of an alternate form, provided it includes the same minimum parameters as identified in the Data Form.

Note: The vapor pressure sensor value observed at the TLS console is refreshed at the frequency defined in Table 10-2. Prior to simultaneously recording the values observed at the digital manometer and the TLS console, the technician should wait until the value at the TLS console is refreshed.

9.5 Verify that the pressure value is between +0.2 and -0.2 inches WC. If the pressure value is not within this range, the pressure sensor is not in compliance with the pressure sensor requirements of Exhibit 2.

9.6 Replace the cap on the ambient reference port of the Vapor Pressure Sensor valve. Restore the Vapor Pressure Sensor valve by turning it 90 degrees so that the flow arrows point to both the Vapor Pressure Sensor sensing port and the UST vapor space sensing line (ref. Figure 10-3).

9.7 If the gasoline dispensing facility is equipped with the VST Membrane Processor, VST Green Machine Processor, or the Veeder Root Vapor Polisher Processor, press the <MODE> key to leave the 'PMC DIAGNOSTIC' menu.

If the gasoline dispensing facility is equipped with the Franklin Fueling Systems Healy Clean Air Separator or the Hirt VCS 100 Thermal Oxidizer, press the <MODE> key to leave the 'SMARTSENSOR DIAGNOSTIC' menu.

9.8 Record the above information on Form 2 "Data Form for Vapor Pressure Sensor Ambient Reference Test." Districts may require the use of an alternate form, provided it includes the same minimum parameters as identified in the Data Form.

10 Post Test Procedure

Upon conclusion of this test, the processor must be re-enabled. The following table provides re-enable instructions for each processor listed in the Executive Order.

Table 10-3: Instructions for Re-Enabling the Processor

Processor	Instructions
Healy Clean Air Separator (CAS)	The four ball valves on the Healy CAS shall be locked in their normal operating positions as shown in Figures 10-11 or 10-12 (for horizontal configuration)
Hirt VCS 100	At the Hirt Indicator Panel, turn the Power Switch to the "On" position as shown in Figure 10-13
Veeder Root Vapor Polisher	At the TLS Console, enter the PMC Diagnostic Menu and set the vapor valve to "automatic mode" as shown in Figure 10-8.
VST Membrane/VST Green Machine	At the TLS Console, enter the PMC Diagnostic Menu and manually turn on the processor as shown in Figure 10-7

11 Alternate Procedures

This procedure shall be conducted as specified. Any modifications to this test procedure shall not be used unless prior written approval has been obtained from the ARB Executive Officer, pursuant to Section 14 of CP-201.

Figure 10-1
Typical Modified Phase I Vapor Adaptor Dust Cap (Bottom View)

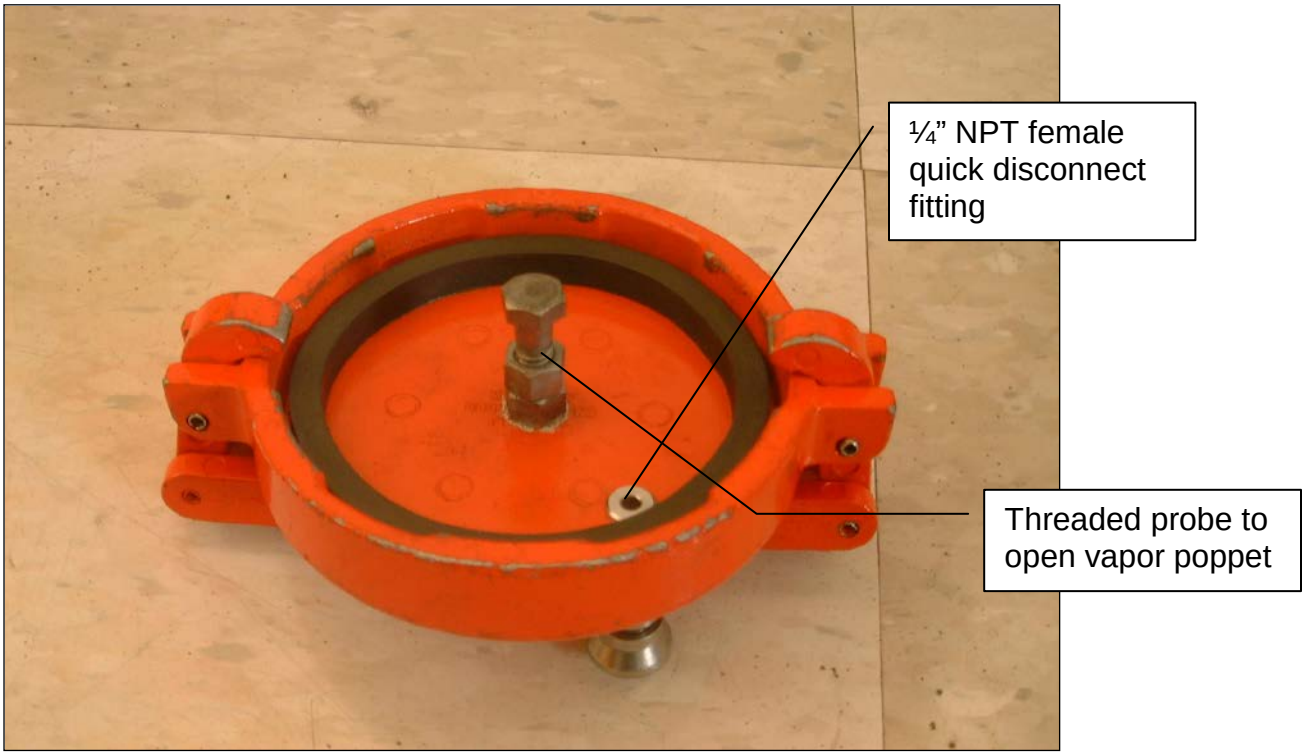

Figure 10-2
Typical Field Installation of UST Pressure Measurement Assembly

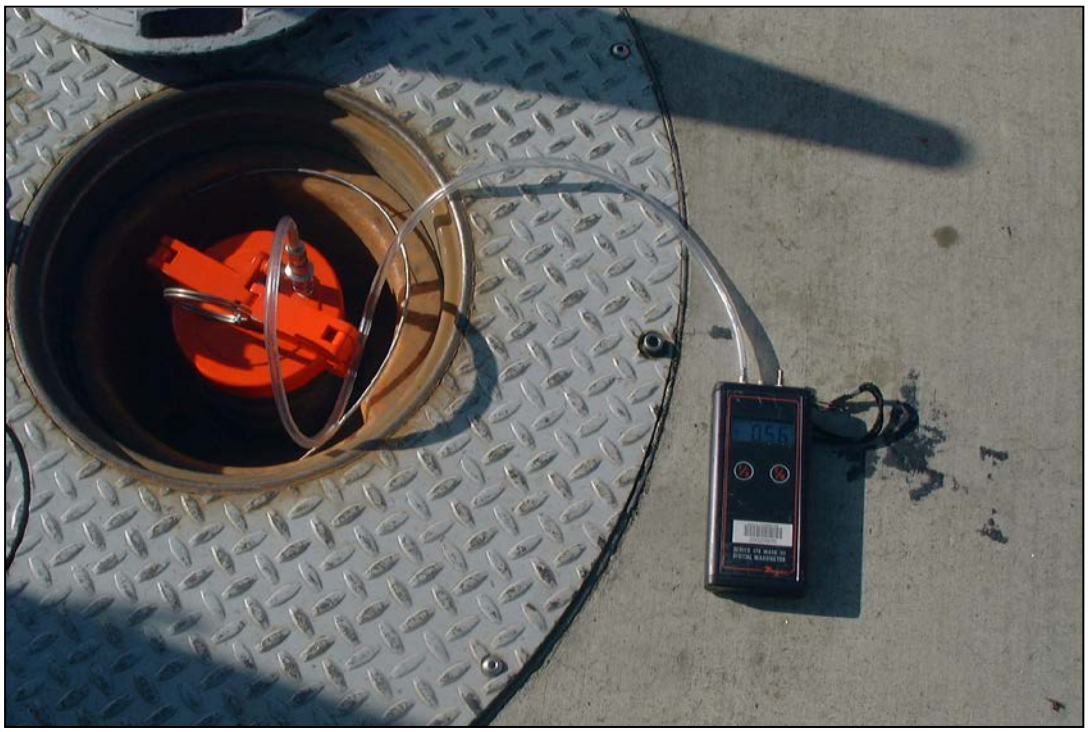

Figure10-3
Vapor Pressure Sensor Valve Position

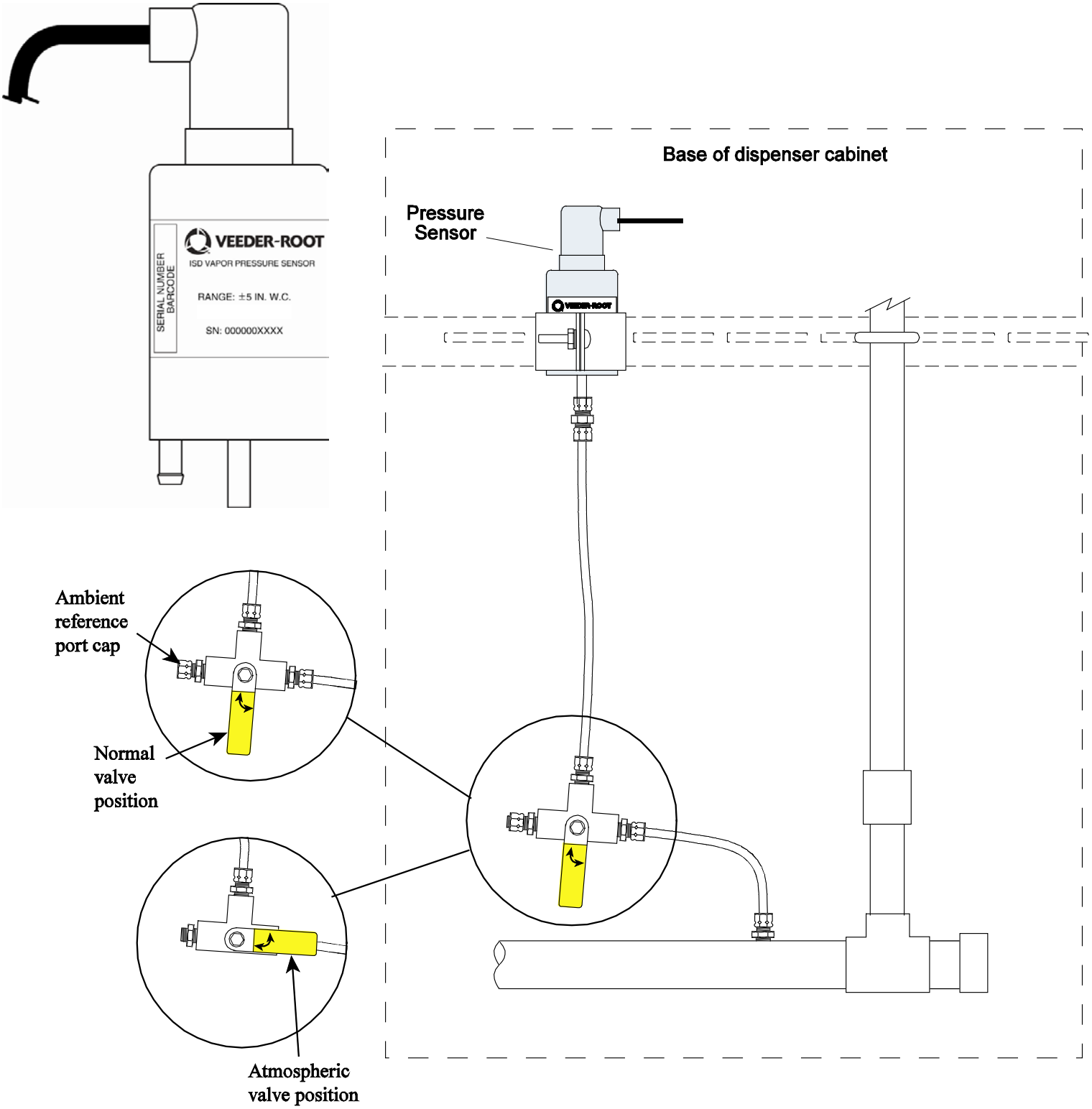

Figure 10-4
Accessing the Vapor Pressure Sensor Reading for GDFs Equipped with the VST Membrane Processor or Veeder Root Vapor Polisher Processor

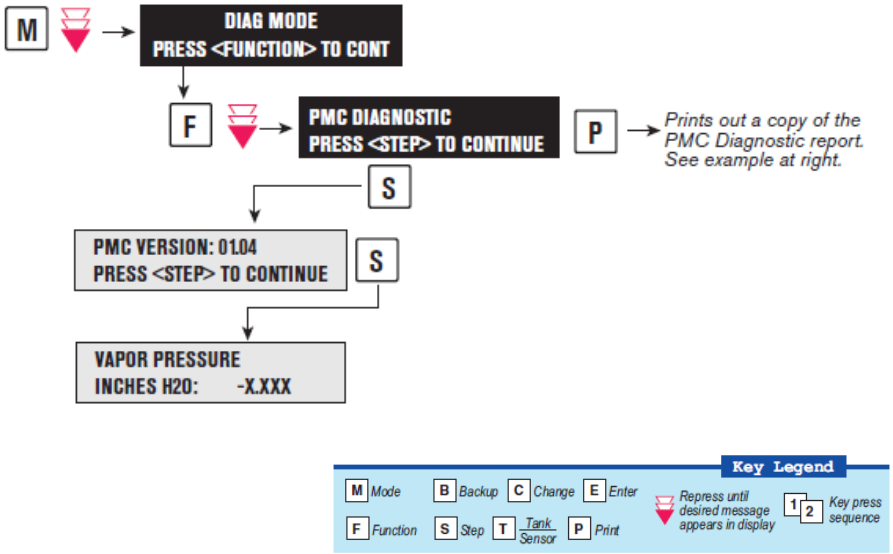

Figure 10-5
Accessing the Vapor Pressure Sensor Reading for GDFs Equipped with the Franklin Fueling Systems Healy Clean Air Separator or Hirt VCS 100 Thermal Oxidizer

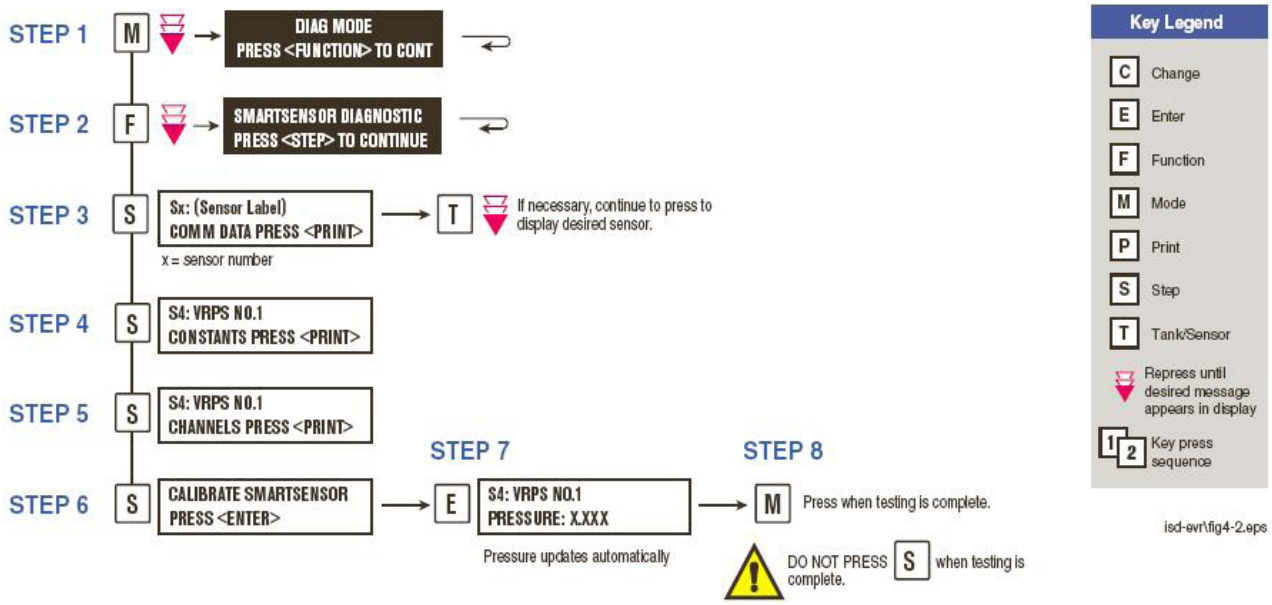

Figure 10-6
Vapor Pressure Sensor Vent Stack Test Port Configuration

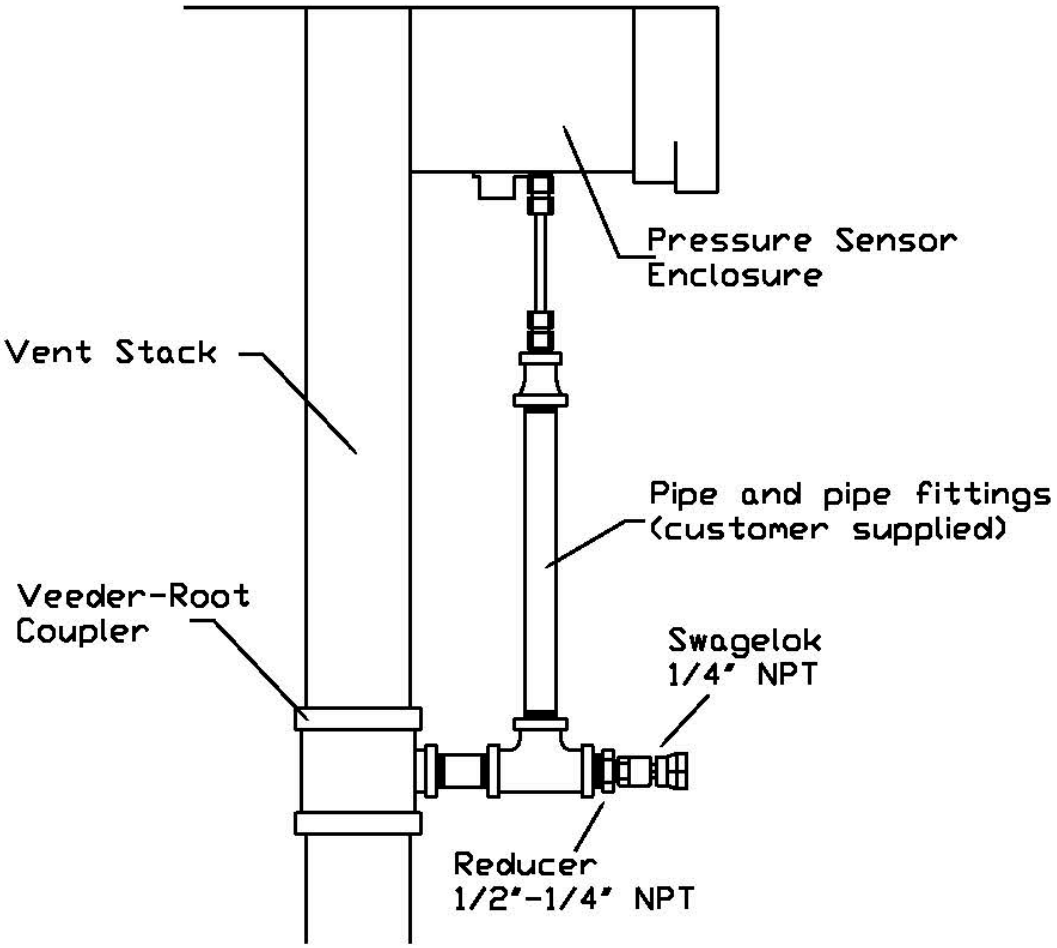

Figure 10-7
How to Disable and Re-enable VST Processors

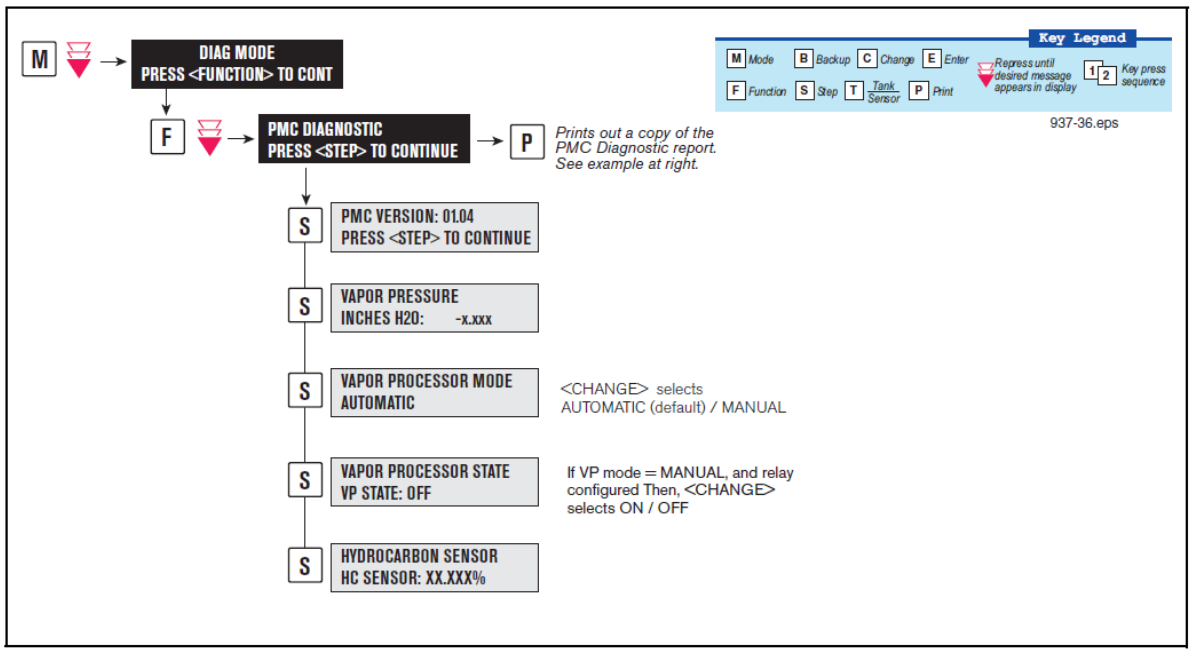

Figure 10-8
How to Disable and Re-enable the Veeder-Root Vapor Polisher

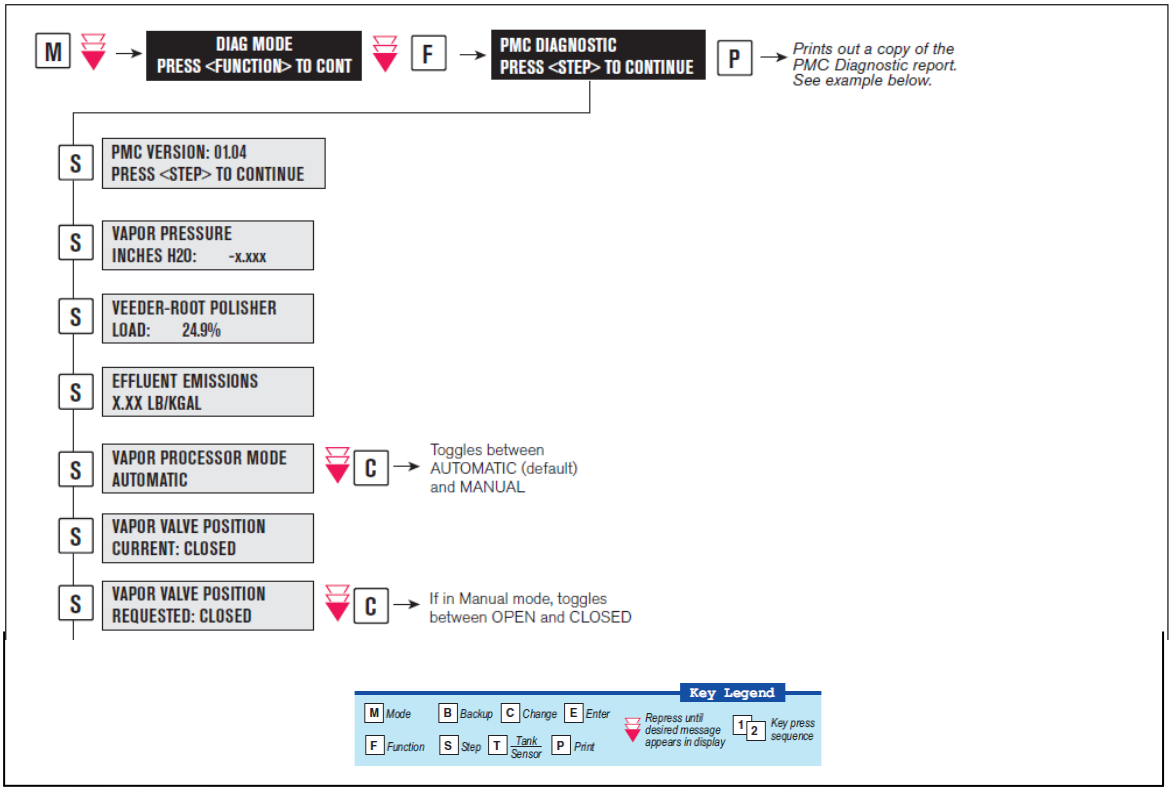

Figure 10-9
How to Disable the Healy Clean Air Separator (CAS)

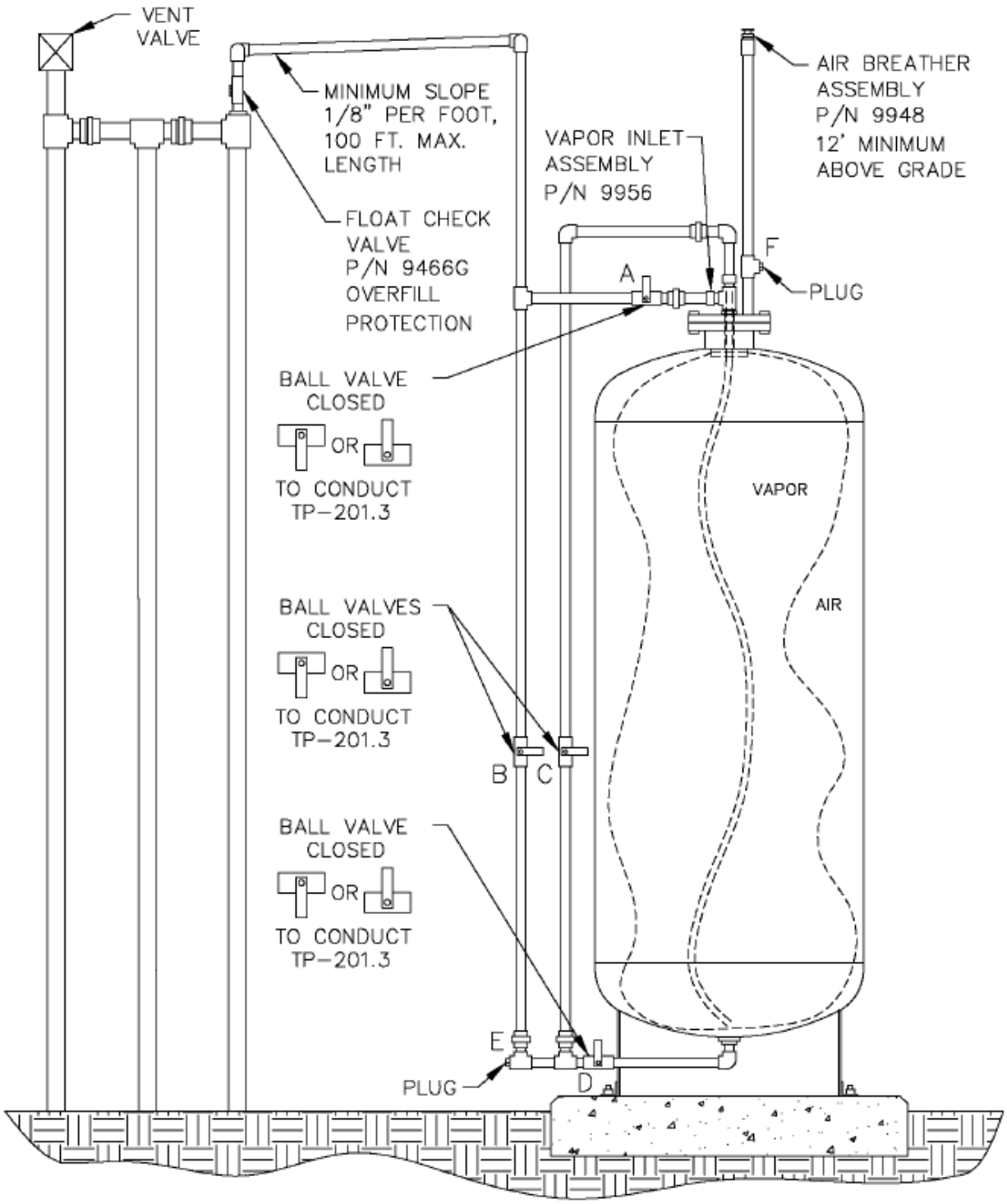

Figure 10-10
How to Disable the Healy Clean Air Separator (CAS)
Horizontal Configuration

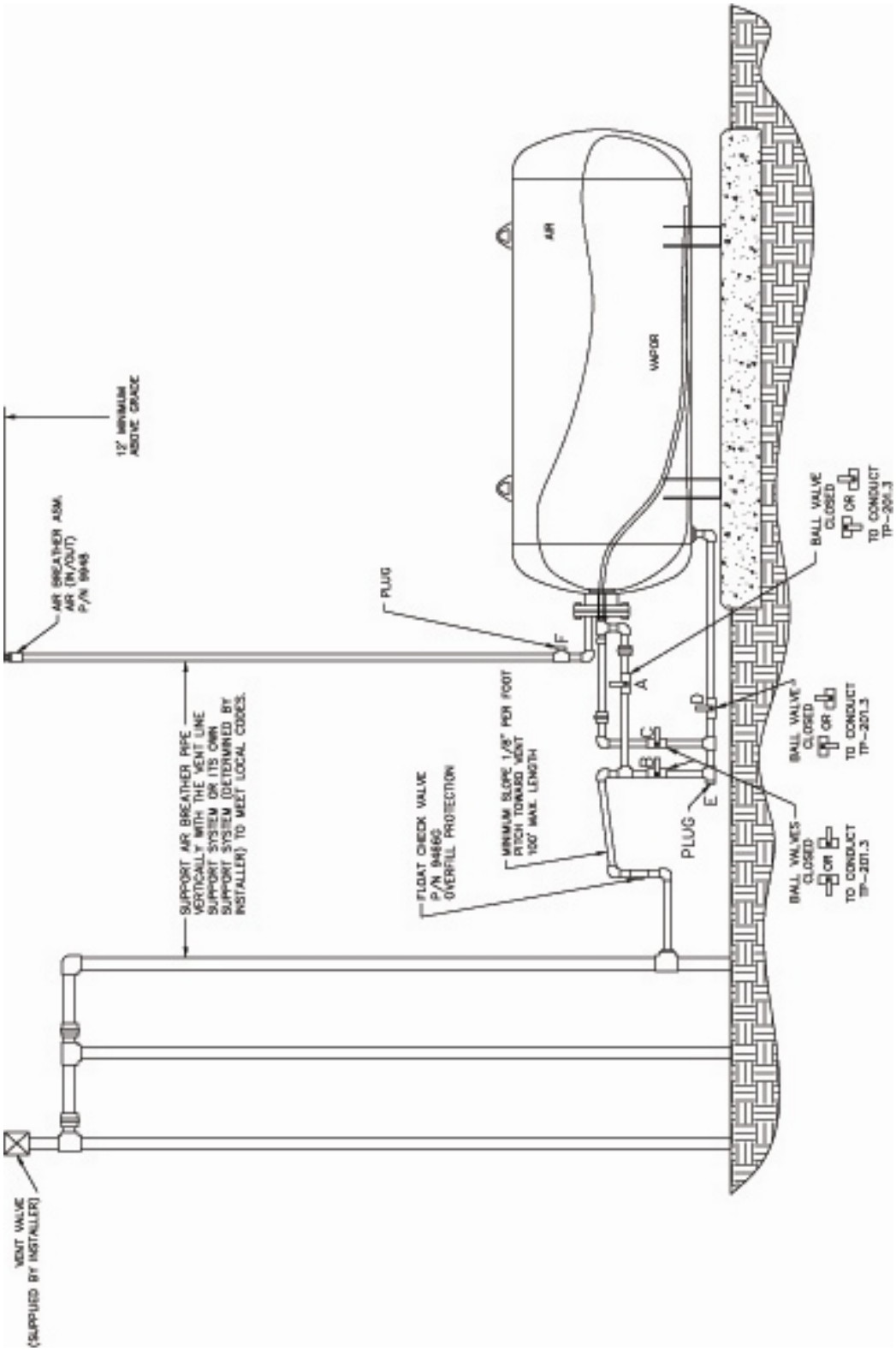

Figure 10-11
How to Re-enable the Healy Clean Air Separator (CAS)

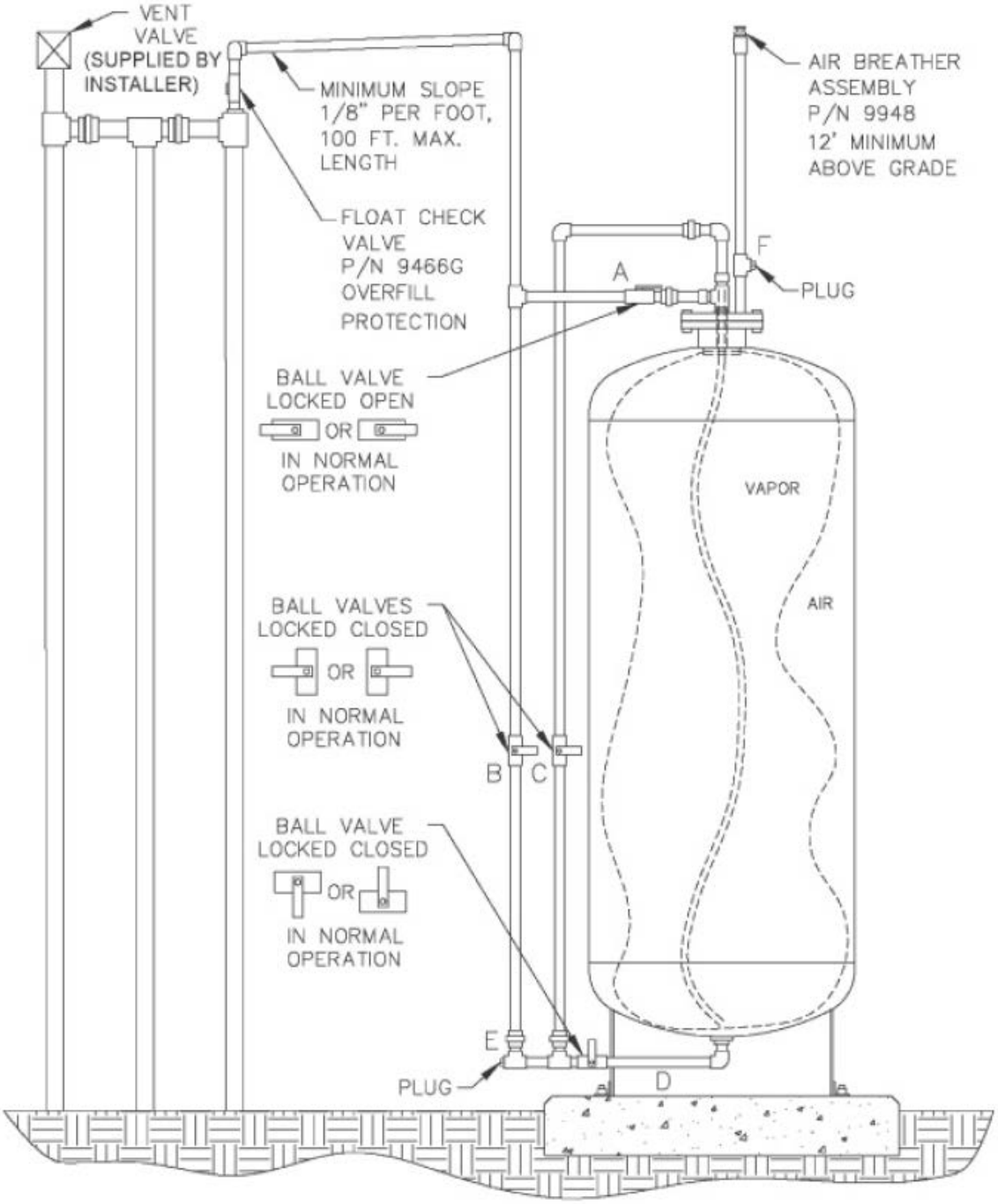

Figure 10-12
How to Re-enable the Healy Clear Air Separator (CAS)
Horizontal Configuration

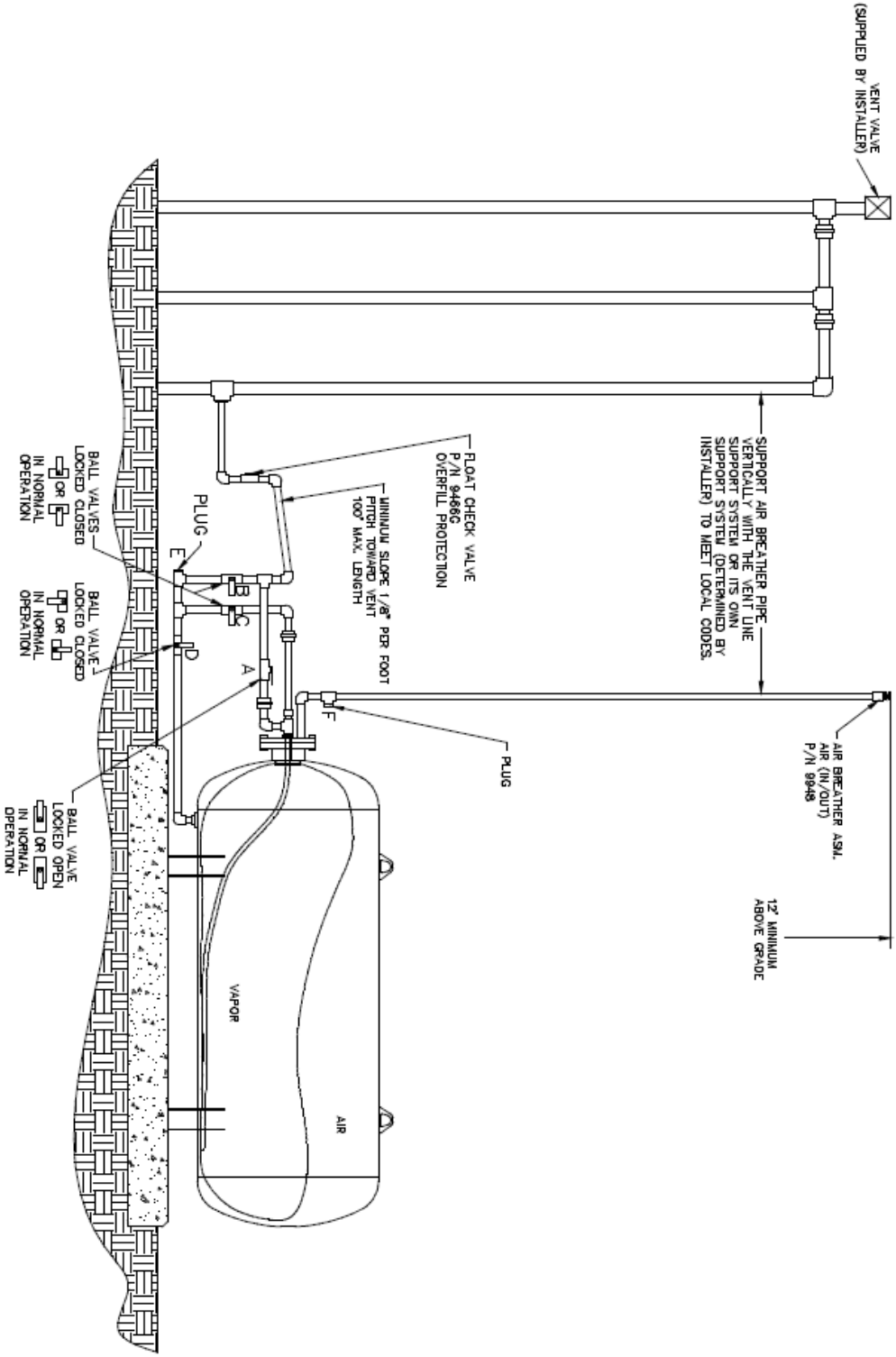

Figure 10-13
How to Disable and Re-enable the Hirt VCS 100 Thermal Oxidizer

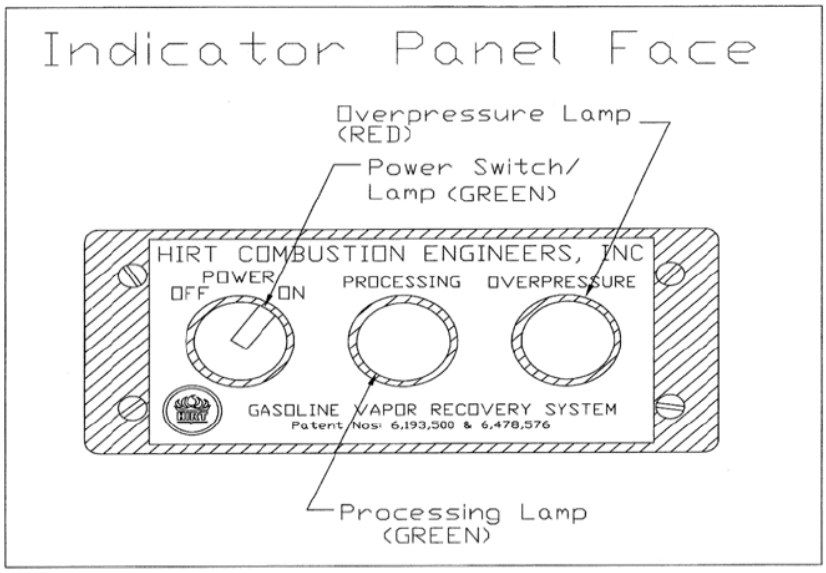

Form 1

Data Form for Vapor Pressure Sensor UST Pressure Test

DATE OF TEST _____

SERVICE COMPANY NAME	**SERVICE COMPANY'S TELEPHONE**
SERVICE TECHNICIAN	**VST or VEEDER-ROOT TECH CERTIFICATION # (as applicable)** **ICC or DISTRICT TRAINING CERTIFICATION (as applicable)**
STATION NAME	**DISTRICT PERMIT #**
STATION ADDRESS **CITY**	**STATE** **ZIP**

PRESSURE SENSOR LOCATION: **DISPENSER FUELING POINT (FP) or VENT STACK**	**FP #**_____ ☐ **VENT STACK** ☐	**PRESSURE SENSOR SERIAL NUMBER:** _____

STEP 8.3	**DIGITAL MANOMETER VALUE** _____ **inches WC**
STEP 8.3	**TLS Console SENSOR VALUE** _____ **inches WC** **(OBTAIN VALUE USING TLS CONSOLE KEYPAD SEQUENCE SHOWN IN FIG. 10-4 or FIG. 10-5, Vapor Pressure)**
STEP 8.4	**TLS Console Sensor Value within ±0.2 inches WC of Digital Manometer Value? Yes** ☐ **No** ☐ **IF NO: THE PRESSURE SENSOR IS NOT IN COMPLIANCE WITH THE PRESSURE SENSOR REQUIREMENTS OF EXHIBIT 2.**
STEP 8.5	**MODE KEY PRESSED TO EXIT DIAGNOSTIC MENU?** ☐

Form 2

Data Form for Vapor Pressure Sensor Ambient Reference Test

DATE OF TEST _____

SERVICE COMPANY NAME		**SERVICE COMPANY'S TELEPHONE**	
SERVICE TECHNICIAN		**VST or VEEDER-ROOT TECH CERTIFICATION # (as applicable)** **ICC or DISTRICT TRAINING CERTIFICATION (as applicable)**	
STATION NAME		**DISTRICT PERMIT #**	
STATION ADDRESS	**CITY**	**STATE**	**ZIP**
STEP 9.1	**PRESSURE SENSOR LOCATION:** **DISPENSER FUELING POINT (FP) or VENT STACK**	**FP #** _____ ☐ **VENT STACK** ☐	**PRESSURE SENSOR SERIAL NUMBER:**_____
STEP 9.2	**REFERENCE PORT CAP REMOVED?** ☐ **VALVE SET TO AMBIENT REFERENCE PORT (PER FIG. 10-3)?** ☐		
STEP 9.3	**NON-CALIBRATED SENSOR VALUE** _____**Inches WC** **(OBTAIN VALUE USING TLS CONSOLE KEYPAD SEQUENCE SHOWN IN FIG. 10-4 or FIG. 10-5, Vapor Pressure)**		
STEP 9.4	**PRESSURE BETWEEN +0.20 & -0.20?** **Yes** ☐ **No** ☐ **IF NO: THE PRESSURE SENSOR IS NOT IN COMPLIANCE WITH THE PRESSURE SENSOR REQUIREMENTS OF EXHIBIT 2.**		
STEP 9.5	**REFERENCE PORT CAP REPLACED?** ☐ **VALVE SET TO NORMAL VALVE POSITION (PER FIG 10-3)?** ☐		
STEP 9.6	**MODE KEY PRESSED TO EXIT DIAGNOSTIC MENU?** ☐		