Executive Order VR-204-A
VST Phase II EVR System Including Veeder-Root ISD

Exhibit 1
Equipment List

Component	Manufacturer/ Model
Nozzle	VST Model VST-EVR-NB, VST-EVR-NB-R (Rebuilt) (Figure 1A-1)
Coaxial Curb Hose	VST Model VDV-EVR Series (Figure 1A-2)
Coaxial Whip Hose	VST Model VSTA-EVR Series (Figure 1A-2)
Breakaway Coupling	VST Model VSTA-EVR-SBK (Figure 1A-2)
Hanging Hardware with Liquid Removal Device	(Figure 1A-3)
Membrane Processor	VST Model VST-ECS-CS3-XXX (Figure 1A-4) where XXX represents motor phase and HC Sensor -110 Single-Phase with HC Sensor -310 Three-Phase with HC Sensor
TLS Console Veeder-Root TLS-350 Series, including but not limited to TLS-350, TLS-350 Plus, TLS-350R, Red Jacket ProMax, Gilbarco EMC consoles	Veeder-Root 8482XX-XXX, 8470XX-XXX (Figure 1A-5) X = Any digit
ISD Software Version Number	1.01
Vapor Flow Meter (1 per Dispenser)	Veeder-Root 332374-XXX (Figure 1A-6) X = Any digit
Vapor Pressure Sensor (1 per GDF)	Veeder-Root 331946-001 (Figure 1A-7)
Smart Sensor Interface Module (1 per GDF)	Veeder-Root 329356-004 (Figure 1A-8)
Dispenser Interface Module (DIM)	Veeder-Root DIM Series (Figure 1A-9)
RS232 Interface Module	Veeder-Root RS232 Interface Module Series (Figure 1A-10)
Mod Bus Module	Veeder-Root 331944-000

Figure 1A-1
Model VST-EVR- NB Nozzle

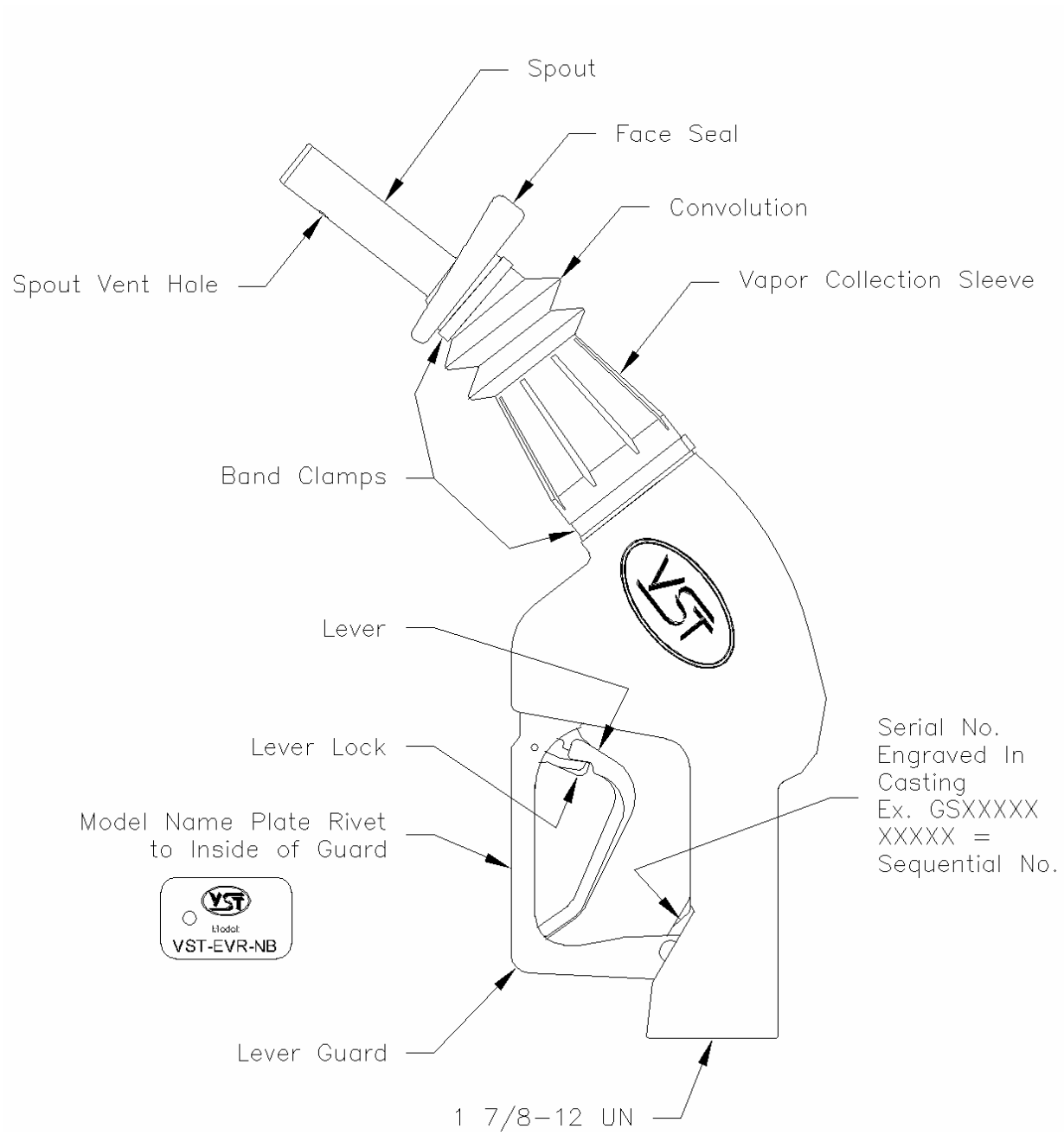

Figure 1A-2
VST Hanging Hardware
(Nozzle, Coaxial Curb Hose, Breakaway, and Coaxial Whip Hose)

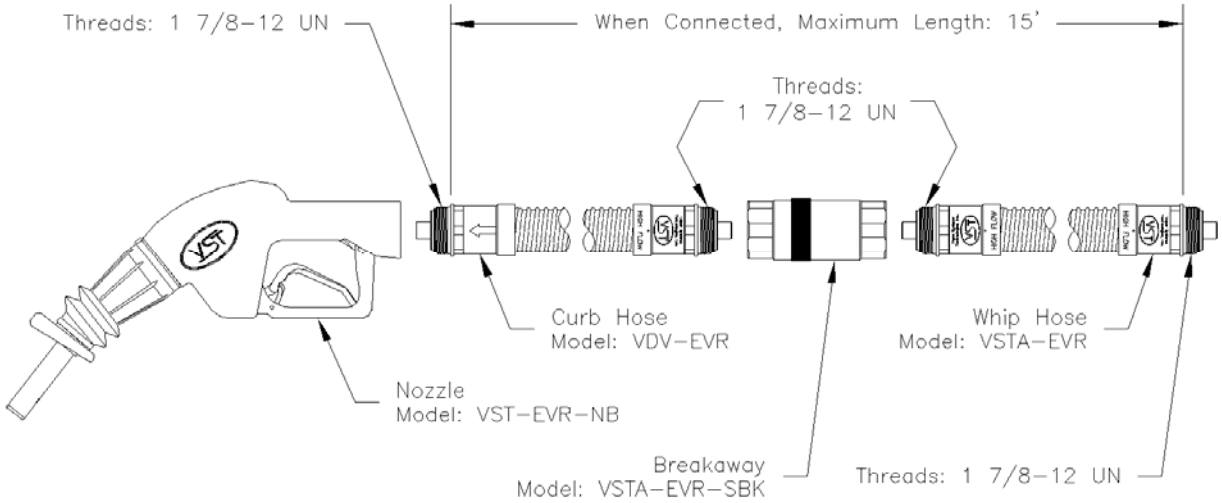

Figure 1A-3
Typical VST Hanging Hardware with Liquid Removal Device

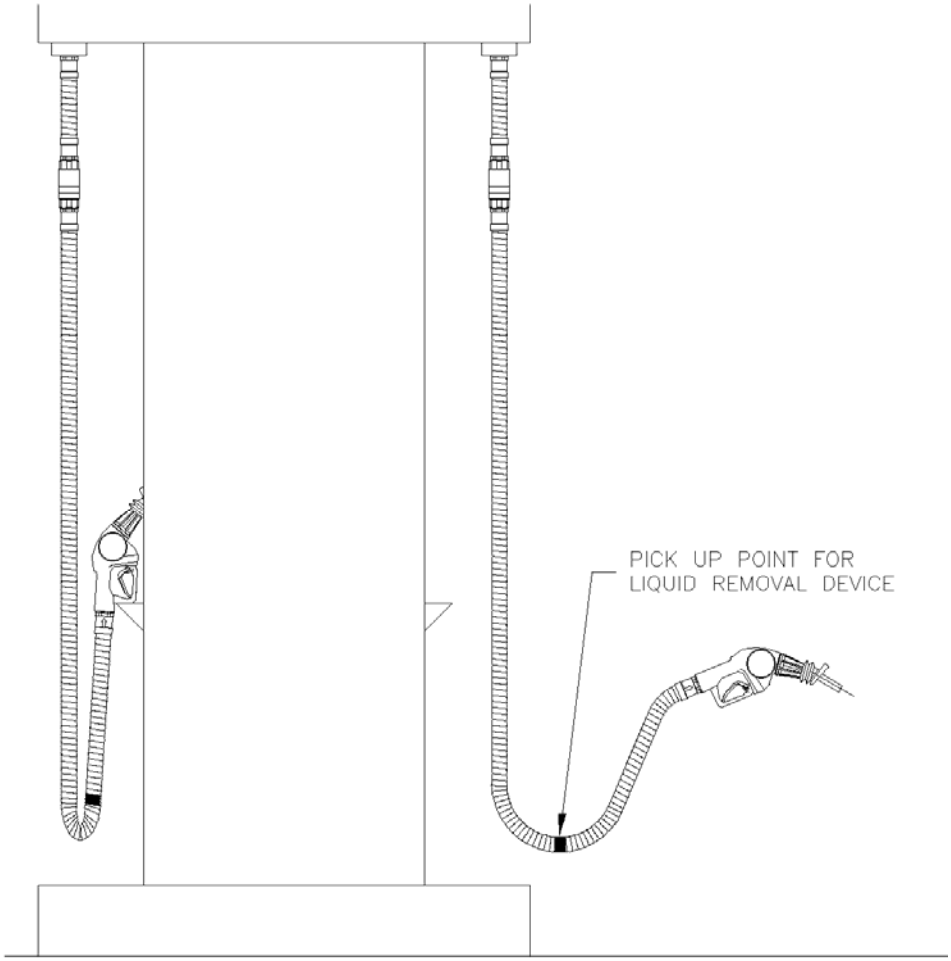

Figure 1A-4
Typical VST-ECS-CS3 Membrane Processor

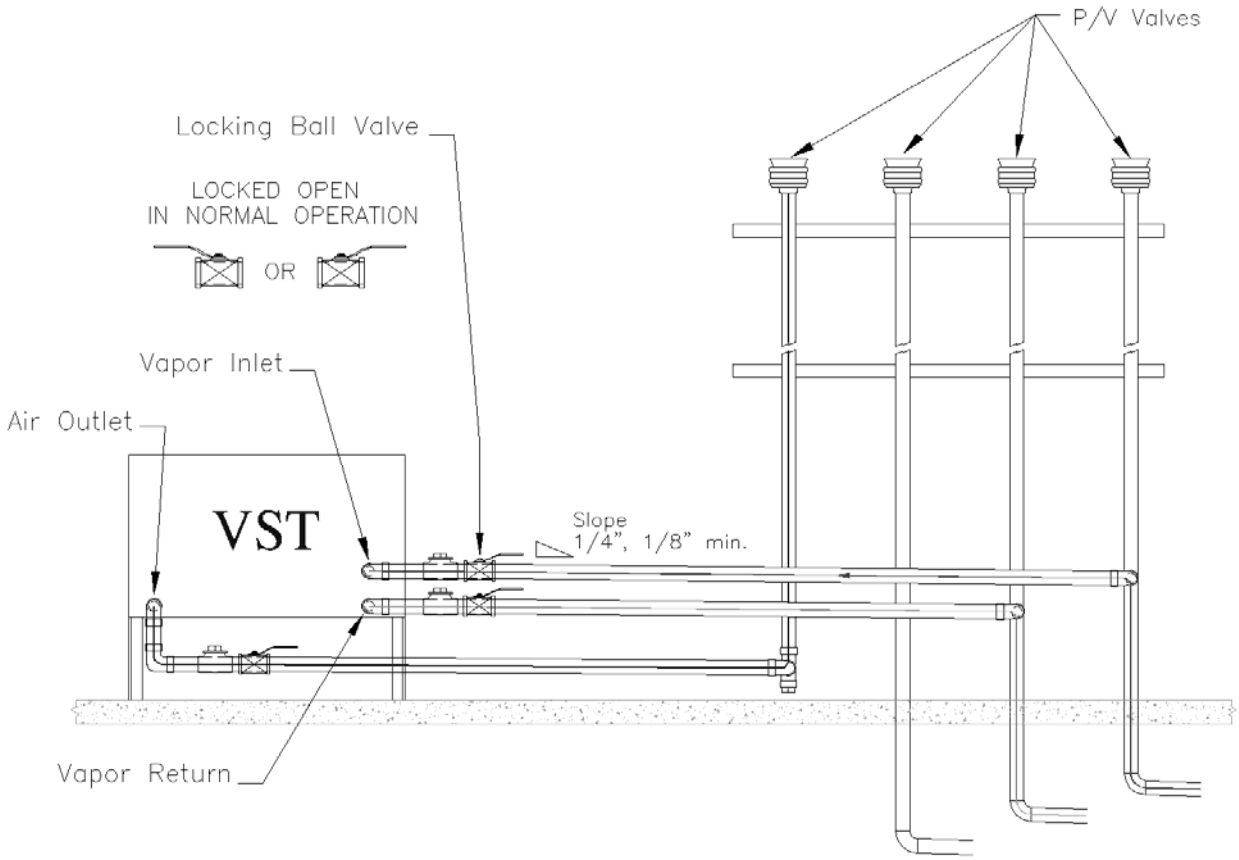

CAUTION: THE HANDLES ON THE LOCKING BALL VALVES MUST NOT BE REMOVED.

Figure 1A-5
Veeder-Root 8482XX-XXX
Veeder-Root 8470XX-XXX
Standard TLS Console

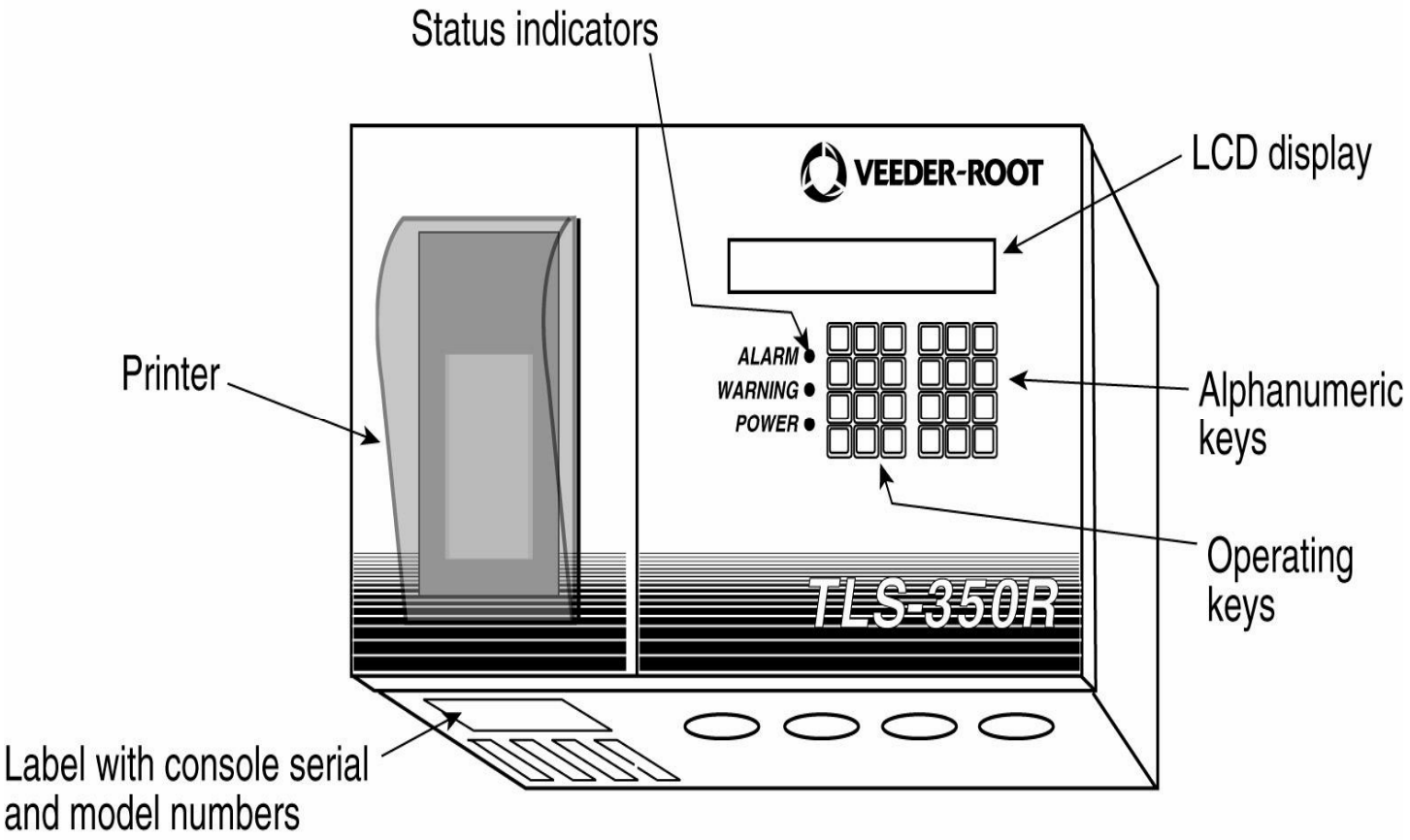

Figure 1A-6
Veeder-Root 332374-XXX
Vapor Flow Meter

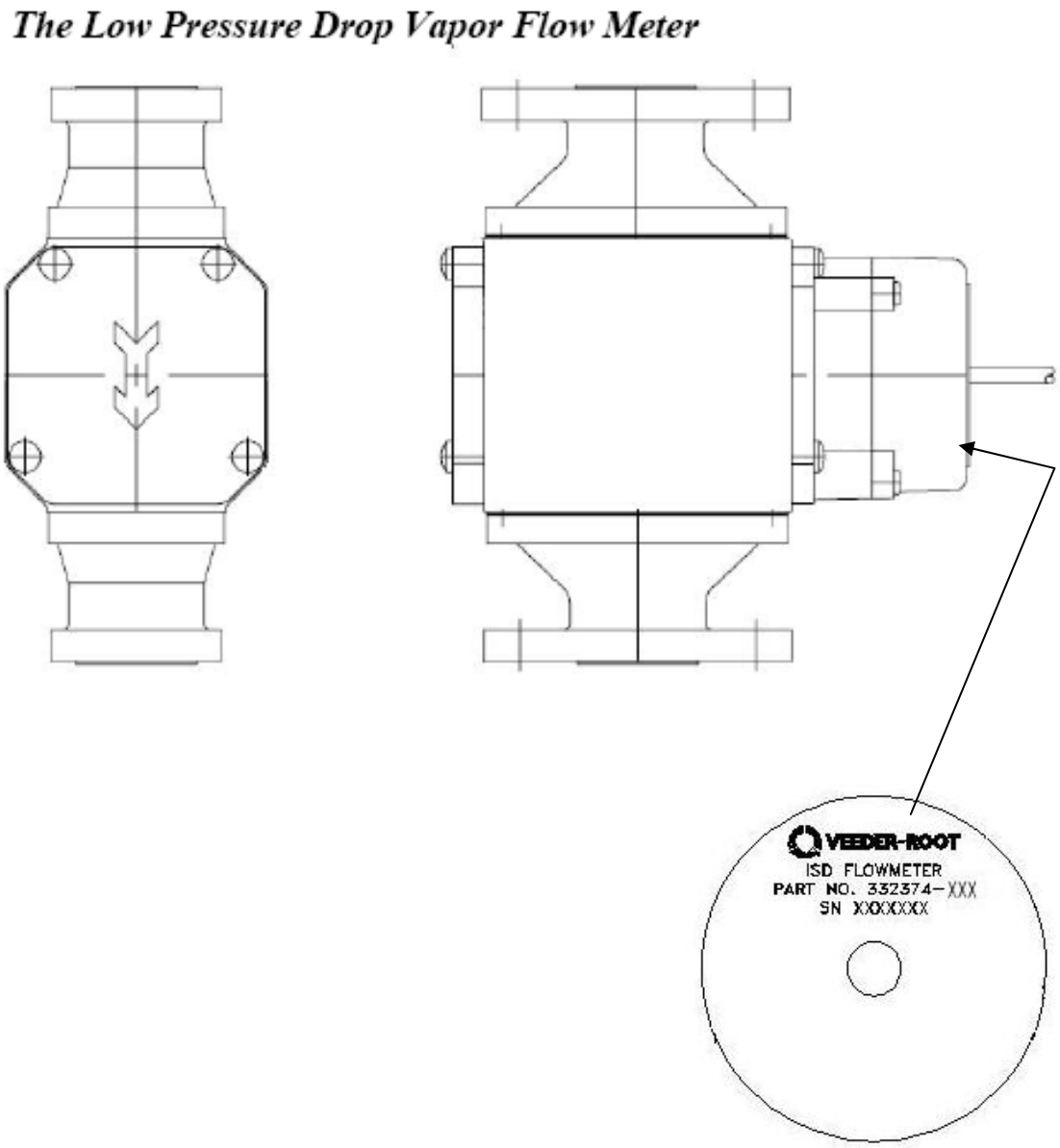

Figure 1A-7
Veeder-Root 331946-001
Vapor Pressure Sensor

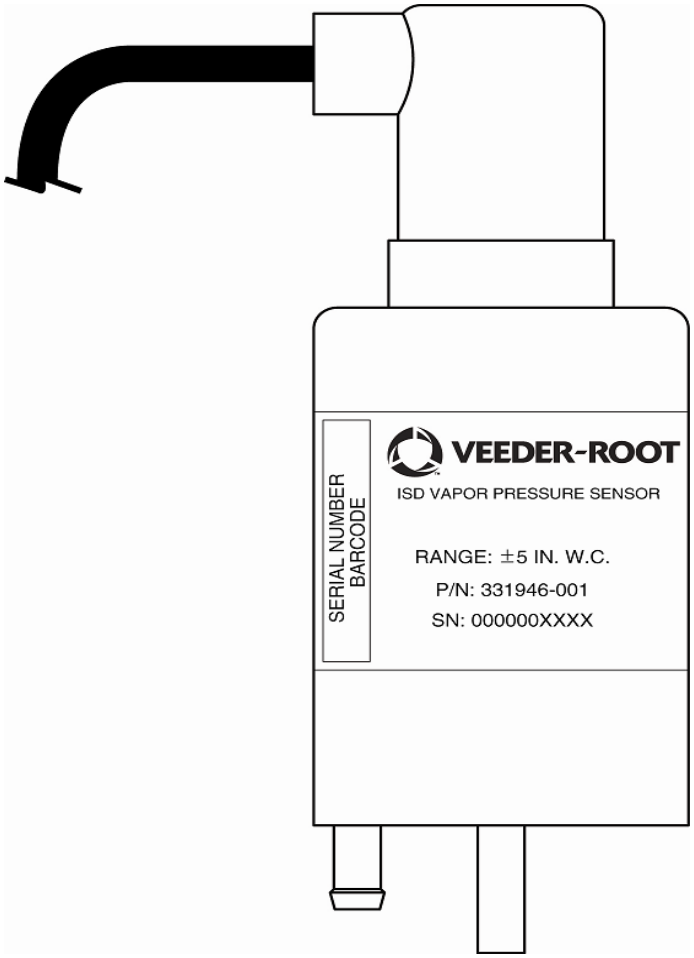

Figure 1A-8
Veeder-Root 329356-004, XXXXXX-XXX
Smart Sensor Interface Module

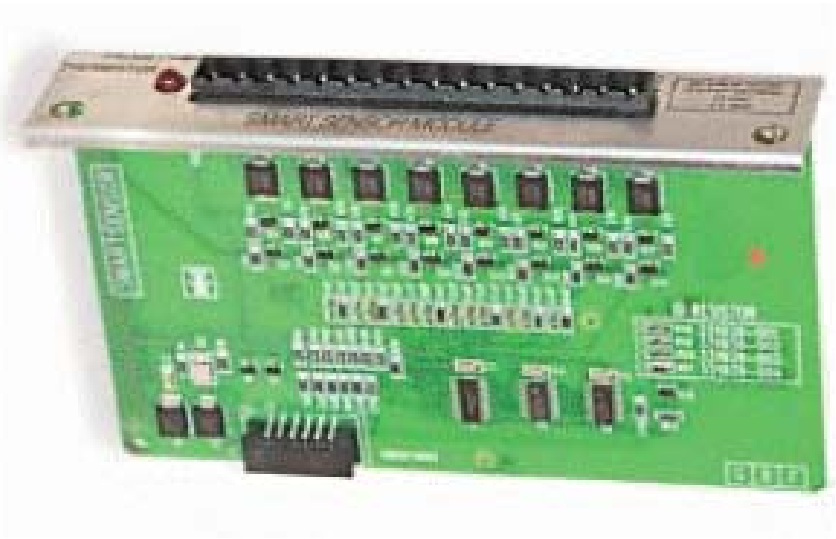

Figure 1A-9
Veeder-Root DIM Series
Dispenser Interface Module (DIM)

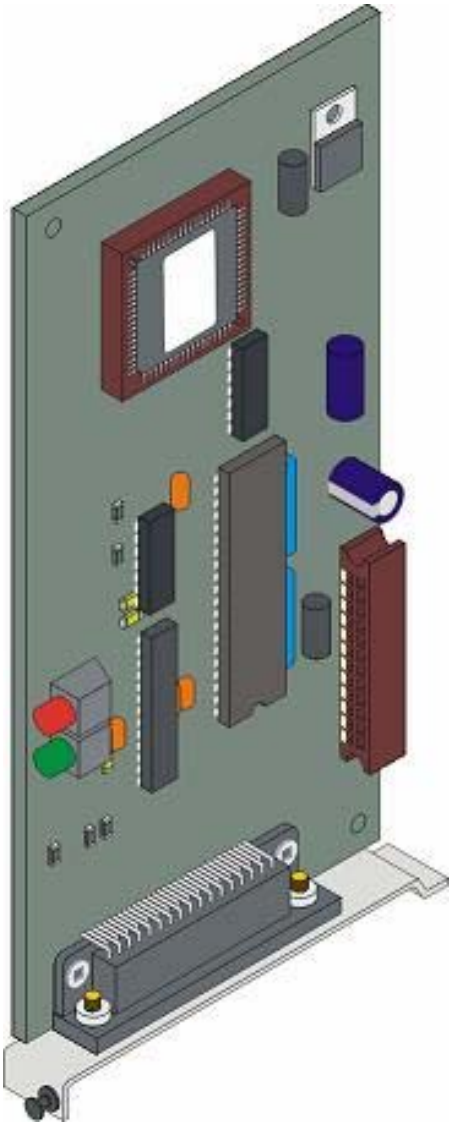
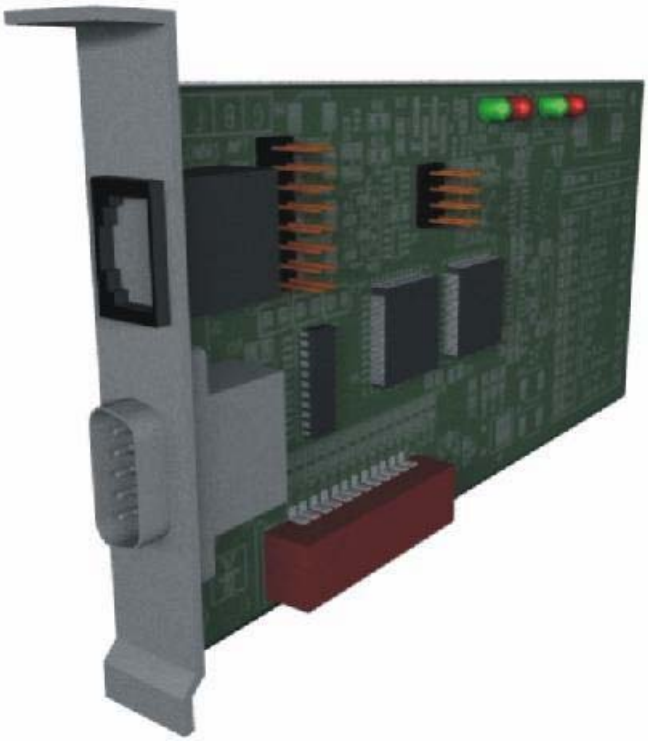
Figure 1A-10
Veeder-Root RS232 Interface Module Series
RS232 Interface Module