Section #15

Operation, Maintenance, Start-Up

ECS Membrane *Processor* with ISD

Part:	VST-ECS-CS3-110 VST-ECS-CS3-310
E.O.	VR-204-A

Vapor Systems Technologies, Inc.
650 Pleasant Valley Drive
Springboro, Ohio 45066
PH: 937-704-9333
FX: 937-704-9443
www.vsthose.com

Table of Contents

Notice *5*
Warranty Cards *7*
Components and Warranties *8*

VST Contractor Requirements 9

Safety Icons 11

1 ECS Membrane Processor Overview 13
1.1 ECS Membrane Processor Theory of Operation 13
1.2 Overview of How the Processor Operates 14
1.3 Processor Dimensions and Weight 15
1.4 Processor Components and Their Purpose 15
1.5 Processor Auxiliary Components 17
1.6 Processor Manuals and Warranty 17

2 Processor Operation 23
2.1 TLS 350 Construction 24
2.2 Automatic Control and Runtime Fault Warning 24
2.3 Manual Control of the Processor 25
2.4 ISD Alarms 26
2.5 Thresholds and Algorithms 26
2.5.1 TLS-350 (ISD): Alarm Troubleshooting Summary 29

3 Post-Installation Power-Up Tests 30
3.1 Required Post-Installation Power-Up Tests 30
3.2 TLS Manual Mode 32
3.3 Electrical Connection Test 33
3.4 Processor Leak Test 33
3.4.1 Tools needed to conduct the *Processor* Leak Test: 34
3.4.2 *Processor* Leak Test Steps 35
3.5 Motor-Rotation Test 36
3.6 Heat-Trace Temperature Test 41
3.7 HC Sensor and HC Sentry Power Test 41
3.7.1 Checking 24 VDC Power to the HC Sensor 41
3.7.2 Checking 24VDC Power to the HC Sentry Module 42
3.8 Preparing the Processor for Field Operation 43
3.9 Post-Installation Power-Up Checklist 44

4 Processor Start-Up 46
4.1 Processor Shut-Down 47
4.2 HC Sensor and HC Sentry Module 47
4.3 Heat-Trace Cable 47

5 Processor Maintenance 48
5.1 Annual Inspections and Maintenance 50
5.1.1 GDF Maintenance Record 52

Component Replacement **53**

6 Blower Replacement **53**
6.1 Safety *53*
6.2 Removing the Blower *53*
6.3 Installing the New Blower *54*

7 Vacuum Pump Replacement **55**
7.1 Safety *55*
7.2 Removing the Vacuum Pump *55*
7.3 Installing the new Vacuum Pump *56*

8 Membrane Replacement **59**
8.1 Safety *59*
8.2 Removing the Membrane from the Membrane Housing *59*
8.3 Installing the New Membrane *61*

9 Drive Coupling Rubber Insert Replacement **62**
9.1 Safety *62*
9.2 Removing the Drive Coupling Insert *62*

10 Heat Trace Cable Replacement **64**
10.1 Safety *64*
10.2 Removing the Heat Trace Electrical Box *64*
10.3 Overview for Installing the New Heat Trace Cable *65*
10.4 Steps for Installing the New Heat Trace Cable *65*
10.4.1 End Seal Kit Installation Instructions 67

11 Hydrocarbon Infrared (HC IR) Sensor Module Replacement **76**
11.1 Safety *76*
11.2 Removing HC IR Sensor from the HC IR Sensor Module Electrical Housing *77*
11.3 Installing a New or Re-calibrated HC IR Sensor Module to the HC IR Sensor Module Electrical Housing *79*

12 Forms **81**
12.1 Preventative Maintenance *82*
12.2 Preventative Maintenance Checklist Form *83*

Table of Figures

Figure 1: VST Registration Card 7
Figure 2: ECS Membrane Processor Sticker 7
Figure 3: How the Processor fits into the GDF layout 18
Figure 4: ECS Process Control Diagram 19
Figure 5: ECS Vent Riser Configuration 20
Figure 6: Processor Isometric Drawing (1 of 2) 21
Figure 7: Processor Isometric Drawing (2 of 2) 22
Figure 8: TLS 350 Face 23
Figure 9: Processor Run-Time Algorithm 28
Figure 10: ECS Piping Configuration 31
Figure 11: ISD Diagnostic Menu 32
Figure 12: Leak Test Fixture 34
Figure 13: Vacuum Pump: Single-Phase Motor Wiring Diagram 37
Figure 14: Vacuum Pump: Three-Phase Motor Wiring Diagram 38
Figure 15: Blower: Single-Phase Motor Wiring Diagram 39
Figure 16: Blower: Three-Phase Motor Wiring Diagram 40
Figure 17: HC Sentry Interface Module Front View: Power and ON/OFF Switch 41
Figure 18: HC Sentry Interface Module Back View: Power "ON" Light 42
Figure 19: Blower inlet and outlet tubing connections and mounting bolts 54
Figure 20: Blower electrical connection conduit 54
Figure 21: Vacuum pump inlet tubing and fittings 57
Figure 22: Vacuum pump outlet tubing connection 57
Figure 23: Vacuum pump electrical connection / vacuum pump outlet tubing / HC sensor inlet tubing 58
Figure 24: Air outlet / vacuum pump outlet / HC sensor inlet tubing 58
Figure 25: Membrane housing 59
Figure 26: Exposed membrane with the top plate removed 59
Figure 27: Membrane extraction tool 60
Figure 28: Membrane / base insert 60
Figure 29: Vacuum pump and motor assembly 62
Figure 30: Vacuum pump with guard removed 62
Figure 31: Vacuum pump unbolted and moved away from the motor 63
Figure 32: Drive coupling rubber insert 63
Figure 33: Termination block inside the electrical junction box 66
Figure 34: Seam to cut to remove the insulation 66
Figure 35: End seal kit components 66
Figure 36: End seal kit installation instructions, page 1 of 2 67
Figure 37: End seal kit installation instructions, page 2 of 2 68
Figure 38: Prepare the new heat trace cable for installation into the end seal kit 69
Figure 39: Electrical junction box installation instructions, page 1 of 4 70
Figure 40: Electrical junction box installation instructions, page 2 of 4 71
Figure 41: Electrical junction box installation instructions, page 3 of 4 72
Figure 42: Electrical junction box installation instructions, page 4 of 4 73
Figure 43: End seal kit location and heat trace cable installation 74
Figure 44: Installed Electrical Junction Box with Electrical Connections 75
Figure 45: HC IR Sensor Module and Electrical Housing Assembly 76
Figure 46: HC IR Sensor Module 1/4" 45-degree Tubing and Fittings 77
Figure 47: HC IR Sensor Electrical Housing Circuit Board 78
Figure 48: HC IR Sensor Electrical Housing Circuit Board Wiring Diagram 78
Figure 49: HC IR sensor installation orientation 79

About VST

Vapor Systems Technologies, Inc. began in 1989 with the vision of **One Company – One Integrated Solution**.

Today, that philosophy is still in place and getting stronger. Recognizing that a healthier environment is a need and not an option, VST has dedicated its undivided attention to the ever-changing, stringent regulations that govern fugitive vapors at gasoline dispensing facilities (GDF). To this challenge, VST is committed to a continual R&D campaign of developing the most current, technologically advanced solutions to service not only the United States, but also the world.

VST specializes in the development, engineering, and manufacturing of products that are sold into the GDF segment of the petroleum industry. The VST focus provides our customers and users with exceptional products, services, and innovative solutions for improving the fueling-station experience as well as the world's air quality.

VST's product offering includes curb pump and vapor recovery hoses, safety breakaways, nozzles, and emission-control system *Processor*s. The ENVIRO-LOC™ vapor-recovery product offering represents the most innovative concept in the industry for trapping fugitive vapors from the front end (vehicle refueling) to the back end (vent risers) of the GDF site.

Notice

Vapor Systems Technologies, Inc. shall not be liable for errors contained herein or for incidental or consequential damages in connection with the furnishing, performance, or use of this publication.

No part of this publication may be translated to another language without the prior written consent of Vapor Systems Technologies, Inc.

Warranty

- The warranty is conditional on whether the *Processor* was installed by a VST ASC Level B or a VST Level C.
- 12-month warranty becomes effective at the time of installation. If this card is not returned, the warranty becomes effective from the date of shipment at VST.
- VST cannot be held responsible for damage to the *Processor* or the *Processor* equipment (inclusive) due to acts of nature, vandalism, or neglect.
- Membranes exposed to gasoline (liquid) due to an overfill or any other reason voids the membrane warranty.
- VST products are warranted to be free of defects in material and workmanship.
- Liability under any expressed or implied warranty is limited to replacement of the product.
- Use of VST products on non-UL Listed systems, or use which falls outside intended field of use, voids any stated or implied warranty.
- VST is not responsible for misuse of, nor improperly installed, products.
- In the event of a warranty claim, the purchaser must obtain a copy of the Return Goods Authorization (RGA) prior to returning product to insure proper processing. Return shipping charges are the responsibility of the customer.
- Warranty status will be determined within 30 days of the return of suspected items.
- VST provides for a warranty program in conjunction with VST's exclusive serial number tracking system.
- Each VST product carries a unique serial number and warranty tracking card.
- Requests for warranty shall be through VST's Return Goods Authorization (RGA) procedure. Call VST at 937-704-9333.
- This warranty does not cover any components exposed to contact with fuels more than 5% menthanol, 10% ethanol, 15% MTBE by volume or any exposure to M85 / E85 fuel.

Warranty Cards

Vapor Systems Technologies, Inc.

Phone: (937)-704-9333 • Fax: (937)-704-9443
www.vsthose.com

IMPORTANT
PRODUCT WARRANTY REGISTRATION CARD

12 MONTH WARRANTY BECOMES EFFECTIVE AT TIME OF INSTALLATION. IF THIS CARD IS NOT RETURNED, WARRANTY BECOMES EFFECTIVE FROM DATE OF SHIPMENT FROM VST.

THE MAXIMUM WARRANTY LIFE IS 18 MONTHS FROM DATE OF SHIPMENT.

PLEASE CALL VST IF THIS PRODUCT IS BEING USED AS A REPLACEMENT. REPLACEMENT WITH A NON VST PRODUCT VOIDS ANY WARRANTY.

SERIAL NUMBER:
INSTALLATION DATE:
INSTALLATION SITE:
CITY/STATE/ZIP:
DISTRIBUTOR NAME:
PRODUCT STYLE:
☐ HOSE ☐ SAFETY BREAKAWAY
☐ NOZZLE ☐ ECS PROCESSOR

VST-9998-04/06

Figure 1: VST Registration Card

NOTICE: THIS TAG MUST NOT BE REMOVED FOR ANY REASON

ECS MEMBRANE PROCESSOR UNIT

Serial Number: _____

Date Installed: _____

This device was factory tested and met all applicable performance standards and specifications to which it was certified.

Manufactured By: Vapor Systems Technologies, Inc.
650 Pleasant Valley Dr., Springboro, Ohio 45066
Phone: (937) 704-9333, Fax: (937) 704-9443

Figure 2: ECS Membrane Processor Sticker

Components and Warranties

PART #	DESCRIPTION	WARRENTY
5001-001	Vacuum Pump/Three-Phase Motor - Shipped with Three-Phase *Processor*	1 year
5001-002	Vacuum Pump/Single-Phase Motor - Shipped with Single-Phase *Processor*	1 year
5001-003	Vacuum Pump Drive Coupling Rubber Insert	1 year
5002-001	Circulating Blower / Three-Phase Motor - Shipped with Three-Phase *Processor*	1 year
5002-002	Circulating Blower / Single-Phase Motor - Shipped with Single-Phase *Processor*	1 year
5003-001	Check-Valve Assembly	1 year
5005-001	Membrane	1 year
5006-001	Membrane Housing, Complete	1 year
5006-011	O-Ring (2) Vertical Tube	1 year
5006-012	O-Ring (2) Base Insert	1 year
5006-013	O-Ring (2) Membrane	1 year
5007-004	Hydrocarbon Sensor	1 year
5008-001	Heat-Trace Cable	1 year
5008-002	Heat Trace Power Connection Kit	1 year
5008-003	Heat Trace End Seal Kit	1 year
5010-001	ECS Aluminum Cover	1 year
5012-100	Membrane Tubing	1 year
5012-101	Blower Inlet Tubing	1 year
5012-102	Blower Outlet Tubing	1 year
5012-103	Vacuum Pump Inlet Tubing	1 year
5012-104	Vacuum Pump Outlet Tubing	1 year
5012-105	HC Return Tubing	1 year
5012-106	HC Inlet Tubing	1 year
5012-107	Membrane Outlet Tubing	1 year
5013-001	Insulation	1 year

VST Contractor Requirements

- Due to the highly volatile nature of gasoline and its handling and storage, VST requires the following certifications for its ASC's:

Level	Component	Authorized Tasks	Training Pre-Requisites
A	Hanging Hardware	Functional Testing Installation Maintenance Repair	No pre-requisite
A/B	Hanging Hardware	Functional Testing Installation Maintenance Repair	No pre-requisite
	Membrane *Processor*	Installation	Veeder-Root Level 1, 2/3, or 4 ASC certification
C	Membrane *Processor*	Annual Testing Component Replacement Maintenance Operation Post-Installation Power-Up Testing Start-Up Testing Troubleshooting	Veeder-Root Level 2/3, or 4 ASC with PMC / ISD certification VST level "A/B"

NOTE:

Depending on local codes, in addition to the VST and Veeder-Root training, contractors may be required to take air-district training or ICC certification as an approved vapor-recovery installer.

- ASC's must be able to show proof of certification if asked. Carry the wallet card or have a copy of your certification on file with the GDF.

- The ASC must record his or her certification number on the applicable paperwork for all warranties to be deemed valid.

- Contractors should **ALWAYS** verify the training and certification requirements with the air-district staff **BEFORE** beginning installation of EVR systems.

Veeder-Root Contractor Requirements

Veeder-Root Level 1	Contractors holding valid Level 1 Certification are approved to perform wiring and conduit routing, equipment mounting, probe and sensor installation, tank and line preparation, and line leak detector installation.
Veeder-Root Level 2/3 or 4	Contractors holding valid Level 2, 3, or 4 certifications are approved to perform installation checkout, startup, programming and operations training, troubleshooting and servicing for all Veeder-Root Tank Monitoring Systems, including Line Leak Detection and associated accessories.
PMC / ISD	This course of training includes In-Stations Diagnostics/Pressure Management Control (ISD/PMC) installation checkout, startup, programming, and operations training. It also includes troubleshooting and service techniques for the Veeder-Root In-Station Diagnostics system. A current level 2/3 or 4 certification is a prerequisite for the ISD/PMC course. After successful completion of this course the contractor will receive a certificate as well as a Veeder-Root ISD/PMC contractor certification card.
Warranty Registrations may only be submitted by selected distributers.	

Safety Icons

	ELECTRICITY A potential shock hazard exists. High voltage is supplied to and exists in this device.		**TURN POWER OFF** Turn power off to the device and its accessories when installing and servicing the unit. Live power creates a potential spark hazard.
	EXPLOSIVE Gasoline and its vapors are extremely explosive if ignited.	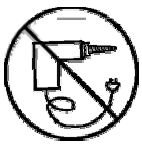	**NO POWER TOOLS** Sparks from electric power tools can ignite gasoline and its vapors.
	FLAMMABLE Gasoline and its vapors are extremely flammable.		**NO PEOPLE IN THE AREA** Unauthorized people in the work area during installation and service of the device create a potential for personal injury.
	NO SMOKING Gasoline and its vapors can be ignited by sparks and embers of burning cigarettes.		**READ ALL RELATED MATERIALS** Read, understand, and follow all instructions, warnings, and requirements before you begin work.
	NO OPEN FLAMES Open flames from sources like lighters and matches can ignite gasoline and its vapors.		**USE SAFETY BARRICADES** Unauthorized people in the work area during installation and service of the device create a potential for personal injury. Therefore, always isolate your work area by using safety cones, barricades, etc.
	PINCH RISK Stay clear. Keeps hands and tools away from rotating machinery and moving parts.		**ROTATING MACHINERY** Stay clear. Keep hands and tools away from rotating machinery.

Table of Terms and Abbreviations

ASC:	Authorized Service Contractor
AQMD:	Air Quality Management Districts
ATG:	Automatic Tank Gauge
CARB:	California Air Resources Board
CDFA:	California Department of Food & Agriculture
CVLD:	Continuous Vapor Leakage Detection, another name for Vapor Leak Detection
ECS:	Emissions Control System
EO:	Executive Order
EVR:	Enhanced Vapor Recovery
GDF:	Gasoline Dispensing Facility
HC:	Hydrocarbon
HC IR:	Hydrocarbon Infrared
ISD:	In-Station Diagnostics
MAG Probe:	A type (brand) of Tank Inventory Probe
NEC:	National Electric Code
NFPA:	National Fire Protection Association
ORVR:	On-Board Refueling Vapor Recovery
OSHA:	Occupational Safety Health Administration
Permeate:	Air return to atmosphere
PLC:	Programmable Logic Control
PMC:	Pressure Management Control
Retentate:	Vapor return to UST
RVP:	Reid Vapor Pressure
TLS:	Tank Level System
TLS Console:	Veeder-Root's line of environmental monitoring consoles.
TS:	Troubleshooting
Ullage:	Vapor space above liquid in a UST
UST:	Underground Storage Tank
VCK:	Vapor Collection Kit
Veeder Root:	Manufacturer of the TLS-350
VOC:	Volatile Organic Compounds
VST:	Vapor Systems Technologies, Inc. - manufacturer of the ECS Membrane *Processor*
WC:	Water Column

1 ECS Membrane Processor Overview

1.1 ECS Membrane *Processor* Theory of Operation

- The VST ECS membrane *Processor* does not interact directly with the other balance system hardware. It is in place to monitor and control the pressure in the UST to within limits specified by CARB.

  Under conditions where the GDF is operational and the balance system hardware is functioning normally, the inherent ORVR compatibility of the balance system (when using VST's ENVIRO-LOC nozzle) will produce a predominately negative gauge pressure in the ullage space of the UST. Under these conditions the ECS membrane *Processor* will typically not need to operate.

  During periods of less activity, the GDF being shut down overnight, winter fuels being present, or other conditions that promote the pressurization of the ullage space, the ECS membrane *Processor* will operate as needed to control the pressure in the ullage space to an accepted level. The ECS membrane *Processor* will turn on at an ullage pressure of +0.20 inches of water and turn it off at a pressure of –0.20 inches of water. Currently, the ECS membrane *Processor* unit is monitored and controlled through the ISD system.

- The ECS membrane *Processor* uses a type of membrane technology to enable it to selectively separate the components in the ullage vapor mixture.

  Through a somewhat complex transport means, certain molecules will selectively travel in a stream from one side of the membrane to the other. This stream is referred to as the permeate stream.

  In this case, the predominate molecules transported across the membrane will be the primary constituents of air, which are oxygen, nitrogen, and water vapor. A small amount of the hydrocarbons present in the ullage mixture will also migrate across the membrane. Typically, the permeate will contain less than 3.0% hydrocarbons. The result of this activity includes, fresh air vented to atmosphere, saturated hydrocarbon vapors returned to the UST, and UST pressurization controlled to an acceptable level.

- The process of separation by the membrane is made possible by using two pumps, one low-pressure pump which circulates the ullage vapor mixture along one side of the membrane, and one high-vacuum pump, which creates the pressure differential needed to cause the permeate transport across the membrane. These are the only moving parts in the system.

  A self-regulating heating coil is incorporated around the membrane housing to keep the membrane free from condensate.

1.2 Overview of How the *Processor* Operates

- The *Processor* is a technology created for Gasoline Dispensing Facilities (GDF) to assist them in reducing the number of harmful emissions released to the atmosphere through the natural occurrence of gasoline vaporization.

- The table below lists the steps that the Veeder-Root TLS 350 and the ISD software takes to control the *Processor*.

1.	• When the UST system pressure rises above +0.2”WC, the *Processor* turns ON.
2.	• Through the vapor inlet pipe connection at the *Processor*, the VOC vapor is drawn into the suction side of the blower.
3.	• The blower discharges the VOC vapor into the membrane housing.
4.	• Inside the membrane housing, the VOC vapor is separated in two air streams: 1. VOC depleted air (referred to as “air”) 2. Concentrated VOC vapor • The membrane is designed specifically for separating air from gasoline VOC vapor.
5.	• A vacuum pump draws the air from the membrane housing through a check valve.
6.	• A sample of the air flows through a hydrocarbon sensor to check the percent hydrocarbons.
7.	• From the vacuum pump, the air is vented to atmosphere via the air return.
8.	• The concentrated VOC vapor returns to the UST system via the vapor return.
9.	• When the UST system pressure drops below -0.2”WC, the *Processor* turns **OFF**.

1.3 *Processor* Dimensions and Weight

Part Number	Unit	Dimensions	Weight
VST-ECS-CS3-110	Single-Phase	L-39” x W-27” x H-43”	385 lbs.
VST-ECS-CS3-310	Three-Phase	L-39” x W-27” x H-43”	350 lbs.
Note: Cover weight is 24lbs. and is included in the overall weight of the *Processor*.			

1.4 *Processor* Components and Their Purpose

PART #	DESCRIPTION	PURPOSE
5001-001	Vacuum Pump / Three-Phase Motor Shipped with Three-Phase *Processor*	Draws air through the membrane housing to the atmosphere.
5001-002	Vacuum Pump / Single-Phase Motor Shipped with Single-Phase *Processor*	
5001-003	Vacuum Pump Drive Coupling Rubber Insert	Drive coupling rubber insert.
5002-001	Circulating Blower / Three-Phase Motor Shipped with Three-Phase *Processor*	The blower circulates the vapor from the UST system through the separation membrane located inside the *Processor* back to the UST system.
5002-002	Circulating Blower / Single-Phase Motor Shipped with Single-Phase *Processor*	
5003-001	Check-Valve Assembly	Eliminates outside air from entering the UST’s.
5005-001	Membrane	By means of the circulating blower, the vapor from the UST system continuously flows through the membrane housing, which holds the membrane cartridge. This happens only while the *Processor* is running. The membrane cartridge separates the air from the VOC inlet vapor, returning a concentrated VOC stream back into the storage tank while the air is vented to the atmosphere. The membrane and housing use UL approved o-rings.
5006-001	Membrane Housing, Complete	Houses the membrane cartridge.
5006-011	O-Ring (2) Vertical Tube	Prevents hydrocarbons from leaking into the atmosphere.
5006-012	O-Ring (2) Base Insert	Prevents the separated air from mixing with concentrated hydrocarbons.

PART #	DESCRIPTION	PURPOSE
5006-013	O-Ring (2) Membrane	
5007-004	Hydrocarbon Sensor	The HC Sensor continuously monitors the amount of hydrocarbons in the air stream being vented to the atmosphere. This happens only while the *Processor* is running. A 4-20mA signal is sent to the TLS-350 controller that monitors the hydrocarbon percentage by volume. 24VDC power is required and is supplied from the HC sentry.
5008-001	Heat-Trace Cable	A self-regulating heat trace cable wraps around the membrane housing and is designed to keep the membrane housing temperature between 100°-150° F. Power is continuously applied to the heat-trace cable 100% of the time whether the *Processor* is running or not. The power requirements are 115 VAC at 130 watts per foot, with a maximum of 2 amps draw. On the end of the heat-trace cable is an end-seal kit to terminate the cable.
5008-002	Heat Trace Power Connection Kit	Connection for 115V power.
5008-003	Heat Trace End Seal Kit	End circuit connection.
5010-001	ECS Aluminum Cover	Protective Cover
5012-100	Membrane Tubing	Internal Vapor Tubing
5012-101	Blower Inlet Tubing	
5012-102	Blower Outlet Tubing	
5012-103	Vacuum Pump Inlet Tubing	
5012-104	Vacuum Pump Outlet Tubing	
5012-105	HC Return Tubing	
5012-106	HC Inlet Tubing	
5012-107	Membrane Outlet Tubing	
5013-001	Insulation	1” thick insulation encases the membrane housing and the heat trace cable to preventing unnecessary heat loss.

1.5 *Processor* Auxiliary Components

PART #	COMPONENT	DESCRIPTION
5015-001	HC Sentry Interface Module w/24VDC power supply	The HC Sentry module acts as an interface between the TLS and the HC sensor. 115v power is supplied to the HC sentry module, which supplies 24VDC power to the HC sensor. A 4-20 mA signal is sent from the HC sensor to the HC sentry module, which converts the signal to a proprietary code for the TLS-350.

1.6 *Processor* Manuals and Warranty

MANUAL #	MANUAL NAME	SECTION
9520-001	ECS Membrane *Processor* with ISD: Installation Manual	14
9520-002	ECS Membrane *Processor* with ISD: Operation / Maintenance Manual	15
9514-003	ECS Membrane *Processor*: Troubleshooting Guide	www.vsthose.com
9514-004	ECS Membrane *Processor*: Pre-Installation Site Survey	www.vsthose.com
9522-001	IOM: VST EVR Balance Total System Solution	5
9998-001	Warranty Paperwork	www.vsthose.com

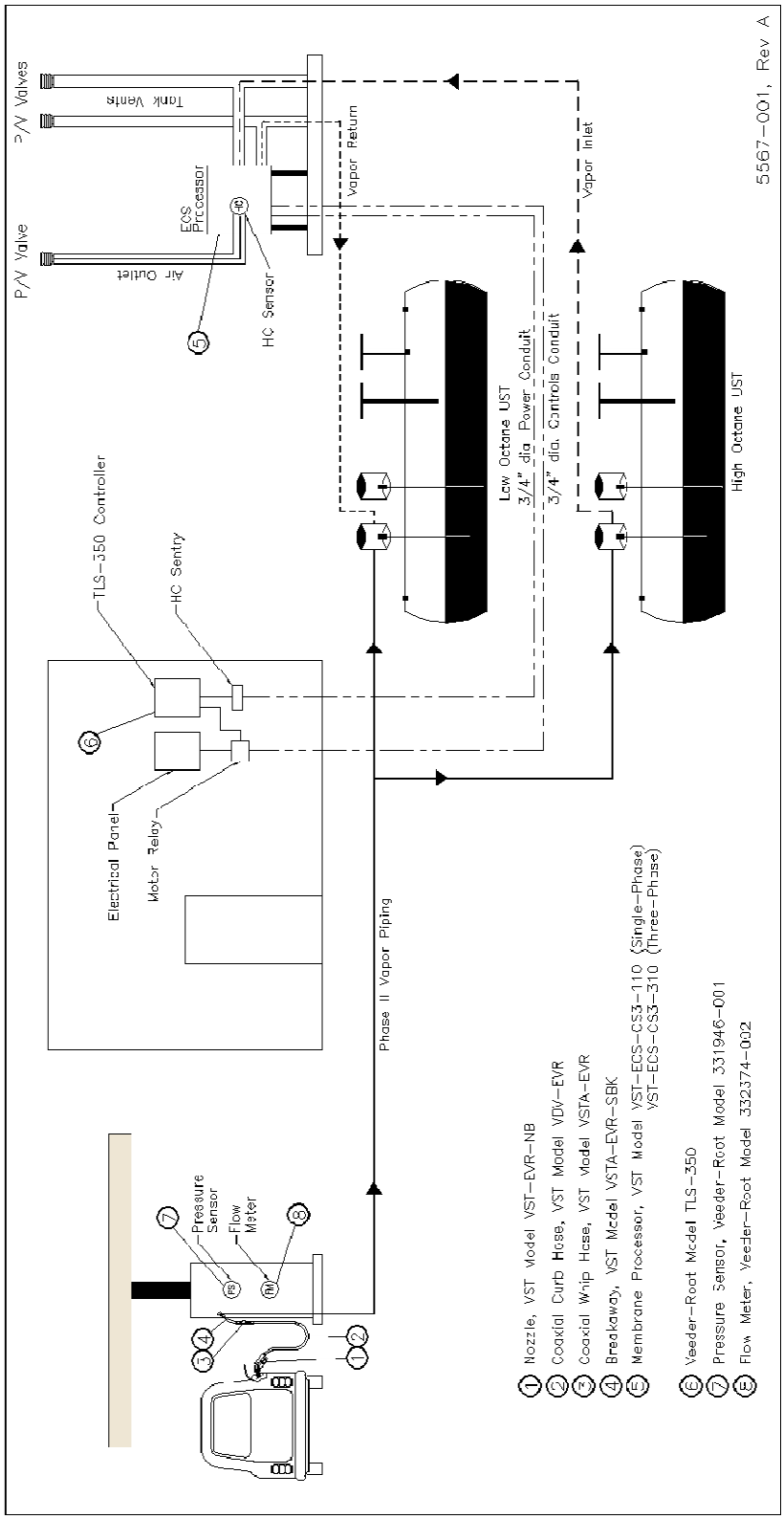

Figure 3: How the Processor fits into the GDF layout

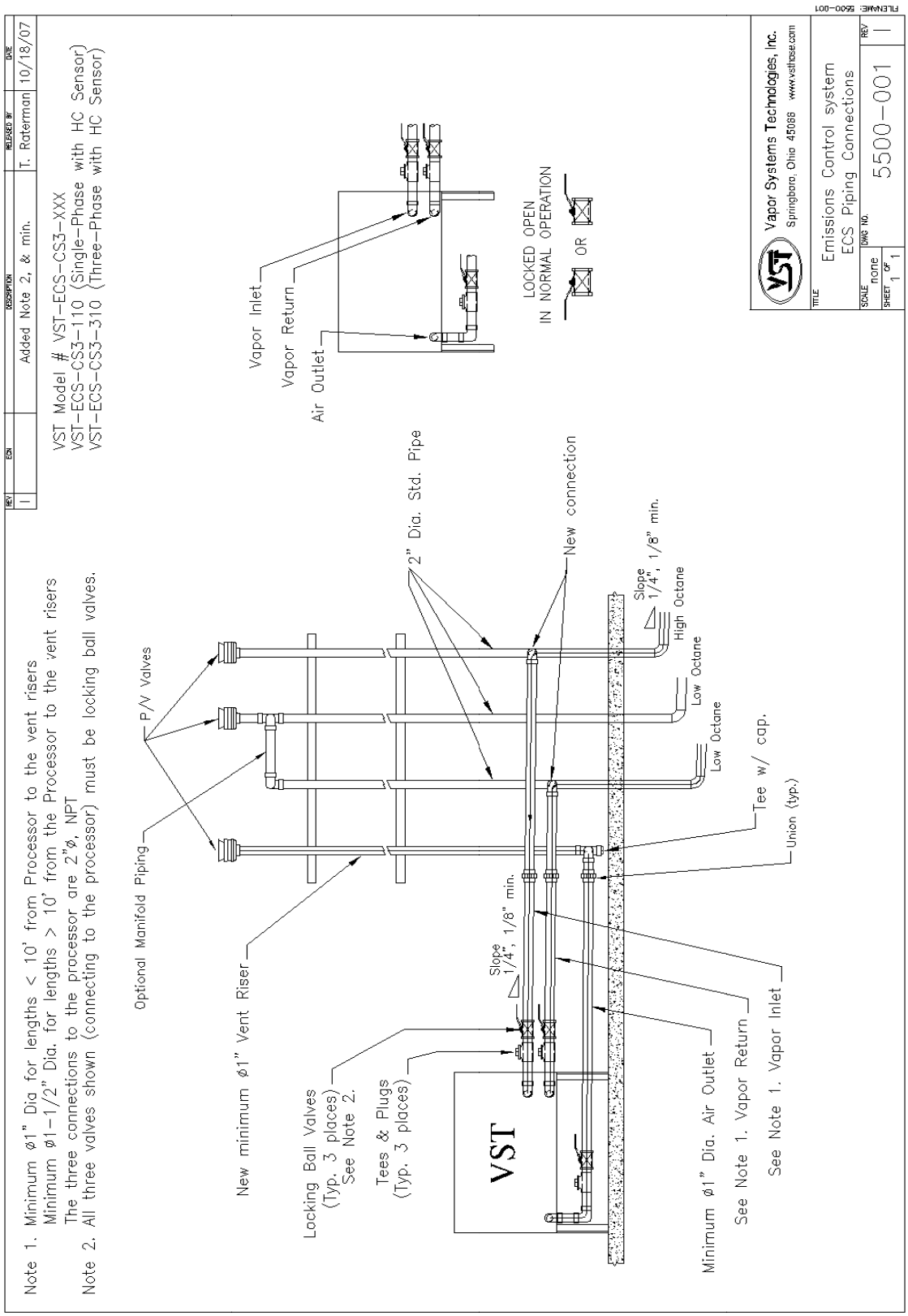

Figure 4: ECS Process Control Diagram

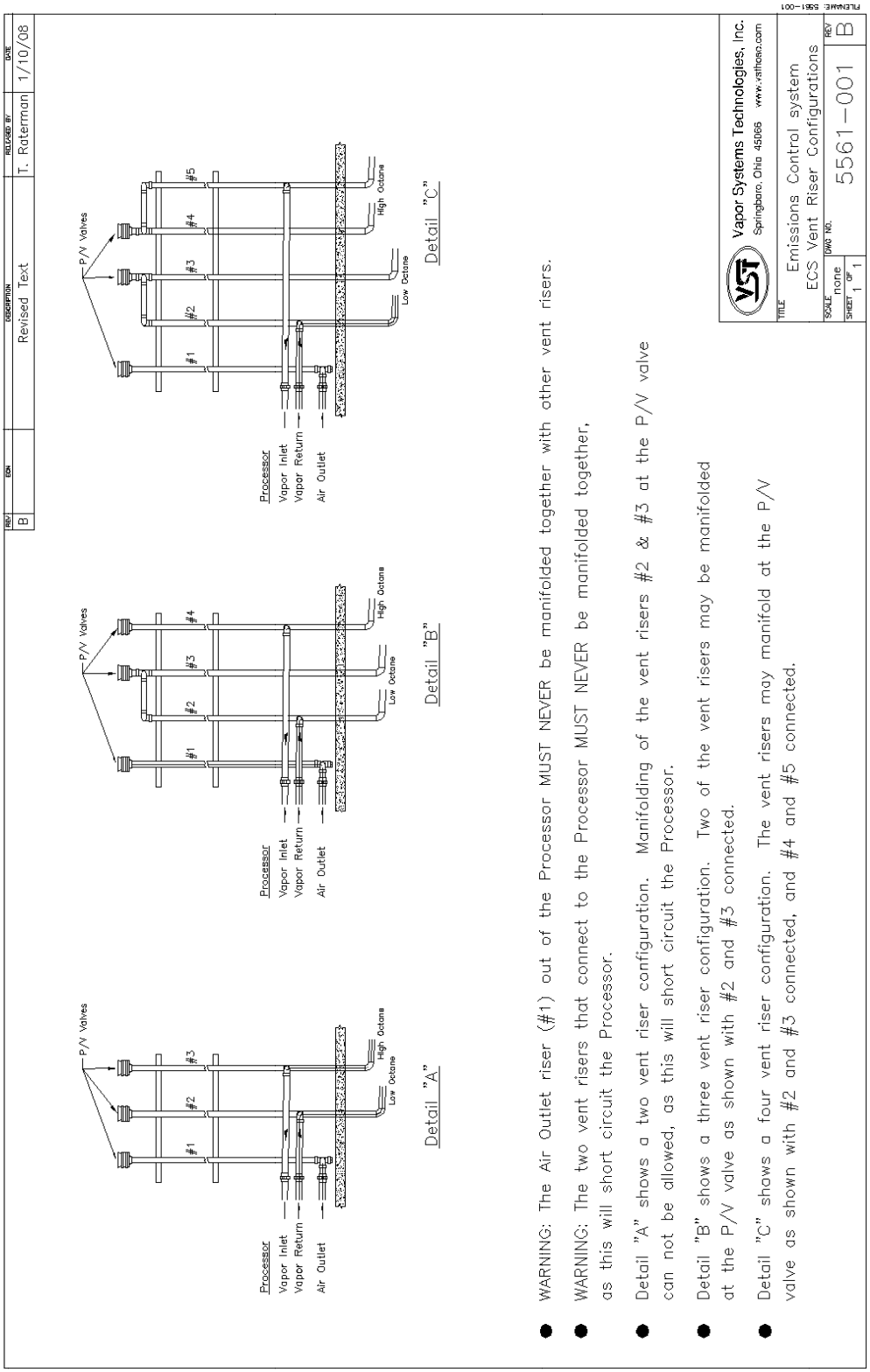

Figure 5: ECS Vent Riser Configuration

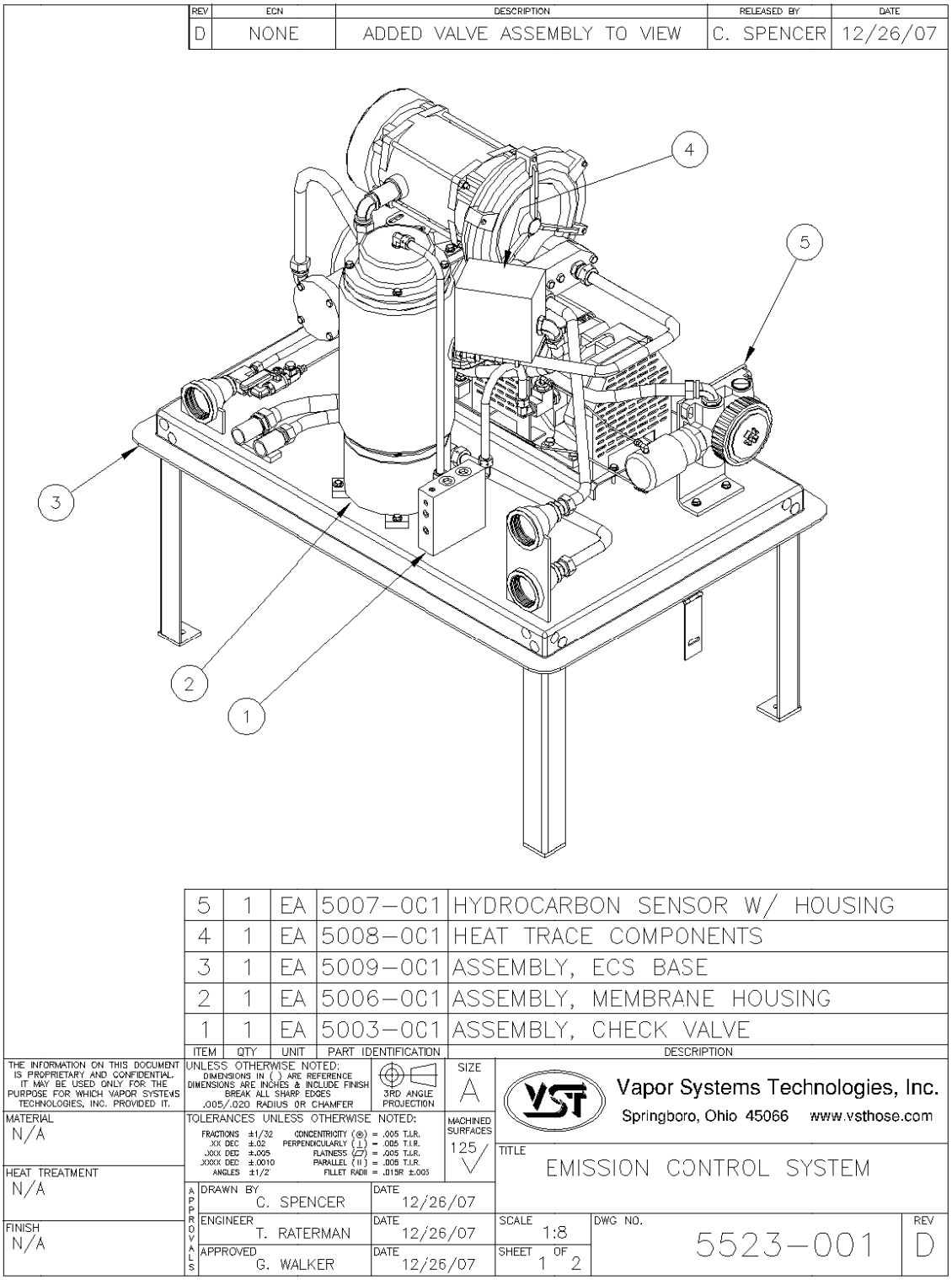

Figure 6: Processor Isometric Drawing (1 of 2)

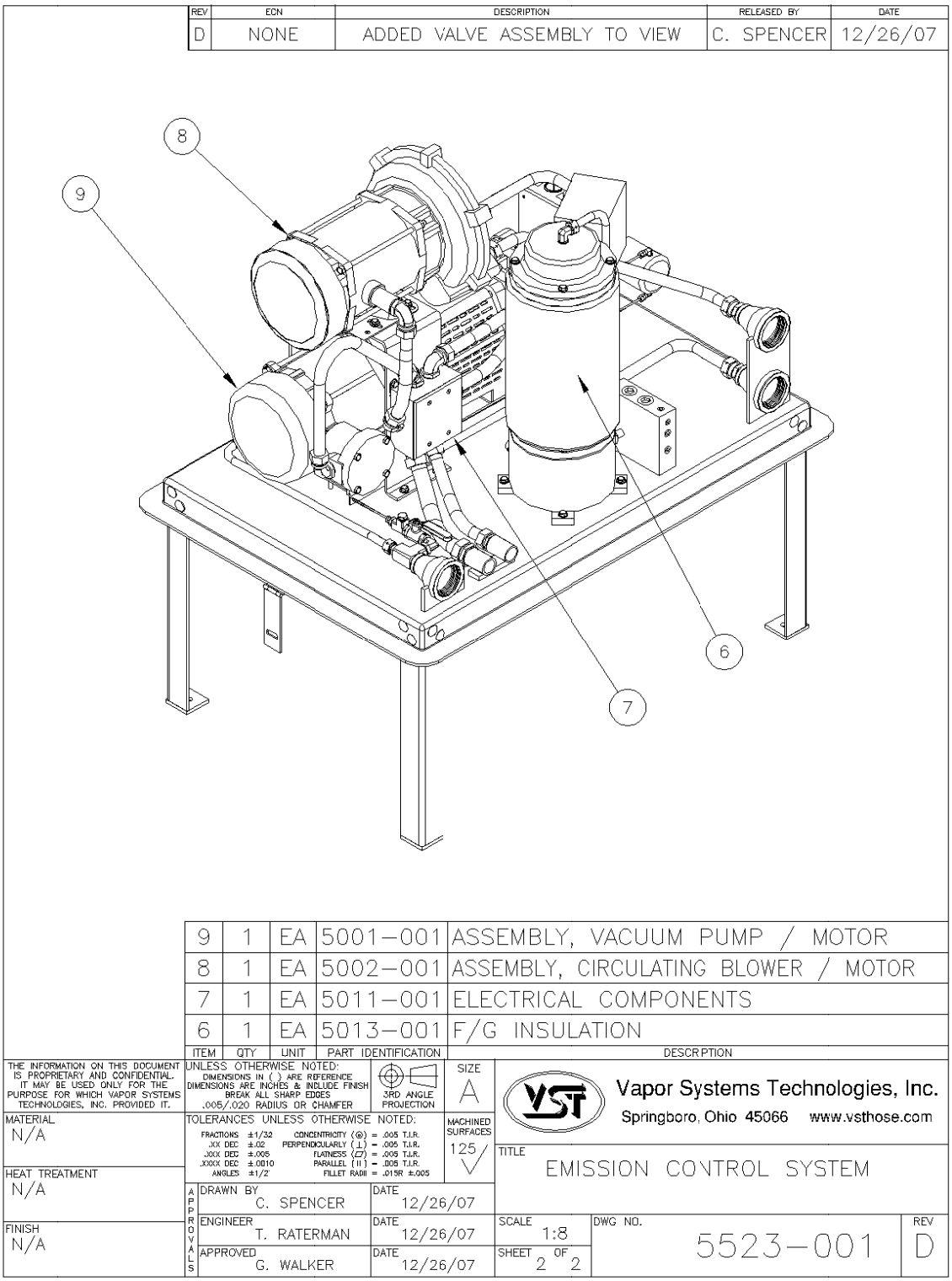

Figure 7: Processor Isometric Drawing (2 of 2)

2 Processor Operation

- The Veeder-Root Pressure software controls the *Processor* and is located within the TLS 350 console. The TLS 350 is an automatic tank gauging, compliance, and fuel-management system.

- The TLS console's face includes,
  - Two-line display
  - Printer
  - Red Alarm indicator
  - Yellow Warning indicator
  - Green Power indicator
  - Alphanumeric and operational keypad

- Warnings and alarms are announced through the various lights on the panel as well as through a paper print-out.

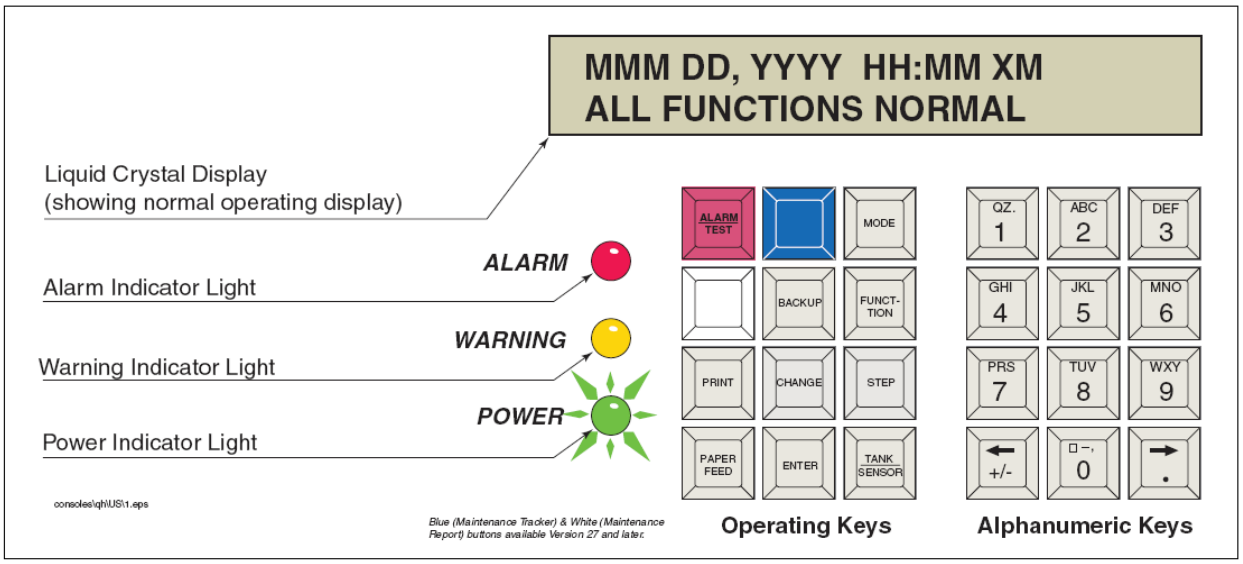

Figure 8: TLS 350 Face

2.1 TLS 350 Construction

- The *TLS Console* is constructed with fuel compatible materials and is approved for use in GDF's by UL (Underwriters Laboratories, Inc.) where wetted components and materials are tested for durability and resistance to corrosion.

- The *TLS Console* is designed to withstand power outages by storing critical system parameters in nonvolatile memory.

- The pressure sensor (supplied by Veeder-Root) is installed inside a dispenser.

2.2 Automatic Control and Runtime Fault Warning

- Under automatic control, vapor pressure readings are compared to the programmed ON/OFF thresholds to determine the appropriate *Processor* state.

    - When the *Processor* is **OFF** and the UST pressure equals or exceeds the programmed **ON** vapor pressure threshold, the *Processor* is turned **ON** and remains so until the pressure equals or is less than the programmed **OFF** vapor pressure threshold.

- During periods when there are no deliveries, if the *Processor* is **ON** continuously for longer than the programmed max 30 minutes runtime, a runtime fault warning is posted and the *Processor* is turned **OFF**.

    - It will remain **OFF** for the same number of minutes programmed as max runtime minutes before turning back **ON**.

    - It will continue to cycle on and off until the vapor pressure drops below the low/off threshold limit.

- During a delivery, if the *Processor* **ON** time exceeds the maximum run time, the *Processor* will be shut **OFF**, and a runtime fault warning will not be posted.

    - After 3 seconds the *Processor* will be turned back **ON** if the pressure is above the high pressure threshold limit.

    - This cycle will continue until the delivery has ended and a **runtime fault** is posted or the pressure goes below the low pressure threshold and the *Processor* is turned **OFF**.

2.3 Manual Control of the *Processor*

- From the diagnostic menus, the *Processor* mode can be changed from **Automatic** to **Manual**.
- When the *Processor* control mode is **Manual**, the diagnostic menu allows the *Processor* to be directly turned **ON** and **OFF**.
    - This feature is to support functional testing and maintenance of the unit.
- The current vapor pressure threshold settings are available through the diagnostic menu.
- **Note**: If the *Processor* is **ON** and the control mode is **Automatic**, changing the control mode to **Manua**l mode will turn the *Processor* **OFF**.
- This feature is to support testing functionality of the *Processor* without needing the pressure to be at operational set-points.
- This function is also to be used for conducting testing or at any time compliant-testing involves opening of the vapor space.
- It is also used to reduce the vapor pressure, and thus clear the *Processor* **Runtime Fault Alarm**.
- The current vapor pressure reading will also be available through the diagnostic menu.

During normal operation, the TLS-350 must be in the <u>AUTOMATIC</u> mode.

2.4 ISD Alarms

- During normal operation when the *TLS Console* and ISD *System* are functioning properly and no warning or alarm conditions exist, the "**ALL FUNCTIONS NORMAL**" message will appear in the system status (bottom) line of the console display.

- If a warning or alarm condition occurs, the system displays the condition type and its location.

- If more than one warning or alarm condition exists, the display will alternately flash the appropriate messages.

- The system automatically prints an alarm report showing the warning or alarm type, its location, and the date and time the warning or alarm condition occurred.

- Warning and alarm posting causes the TLS 350 to activate:
    - Warning lights
    - Failure-Alarm indicator lights
    - Audible alarm
    - Automatic strip paper printout documenting the warning or alarm

2.5 Thresholds and Algorithms

- Two thresholds (high and low pressure) are used to activate and deactivate the *Processor* internal TLS-350 relay.

- Three thresholds can be set via the TLS keypad or serial RS232 commands. These thresholds include:

    - Vapor *Processor* **LOW PRESSURE THRESHOLD** set at -0.2" WC
        - Maximum negative UST pressure required in order to turn **OFF** the *Processor*

    - Vapor *Processor* **HIGH PRESSURE THRESHOLD** set at +0.2" WC
        - Minimum positive UST pressure required in order to turn **ON** the *Processor*

    - Vapor *Processor* runtime set at 30 minutes
        - Maximum allowable runtime

- The TLS 350 control algorithm checks the current UST pressure level and turns the *Processor* **ON** and **OFF** according to the high and low pressure thresholds.

- If the *Processor* is **ON**, a second check confirms that it has not exceeded the TLS 350 runtime threshold.

- The Veeder-Root Pressure Sensor (VRPS) reads every 20 seconds, and this reading is compared to the vapor-pressure thresholds to determine the *Processor* state, which will be either **ON** or **OFF**.

- When the *Processor* is **OFF** and the high-vapor pressure threshold is exceeded, the relay is enabled (which starts the *Processor*) and remains enabled until the pressure drops below the low-vapor pressure threshold.

- Automatic control is the default mode.

- The internal relay must be programmed as a **VST Vapor *Processor* (VP)** through the TLS 350 relay setup menu.

- The *Processor* control algorithm will not be engaged until at least one relay of this type is detected by the TLS 350.

- Whenever the *Processor* runs more than 30 minutes, a **ISD VP RUNTIME FAULT** is declared and the *Processor* is ***automatically*** turned **OFF**.

- While this **RUNTIME FAULT** is active, the *Processor* will not be controlled by UST pressure and will remain **OFF** for 30 minutes.

- The *Processor* will then restart assuming the UST pressure is still above the lower threshold setting and the TLS is in the automatic controlled mode.

- This cycle continues until the **ISD VP RUNTIME WARNING** is posted.

- The TLS-350 will clear the alarm when the vapor pressure drops below the low pressure threshold limit.

- **Figure 9: Section 15 / Page 28** shows the *Processor* Run-Time Algorithm.

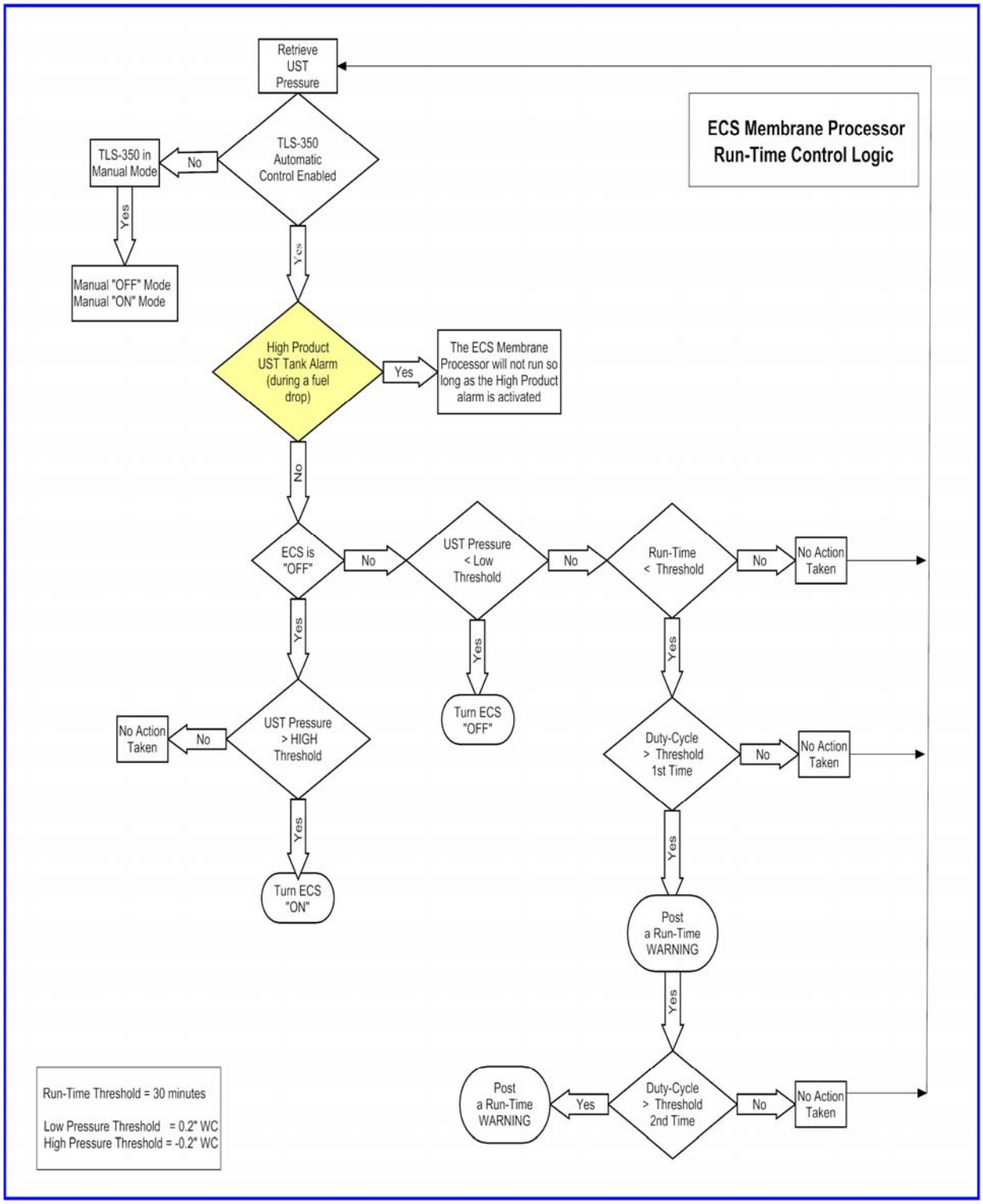

Figure 9: Processor Run-Time Algorithm

2.5.1 TLS-350 (ISD): Alarm Troubleshooting Summary

ISD Alarm Troubleshooting Summary				
Message	**ISD Category**	**Light**	**Cause**	**Suggested Troubleshooting**
ISD VP STATUS WARN	Processor	Yellow	Failure of Vapor Processor Effluent Emissions or Duty Cycle test.	• See Troubleshooting Guide 9513-003 found at www.vsthose.com. • See VP Emission Test • See VP Duty Cycle Test
ISD VP STATUS FAIL (ISD Site Shut-Down Alarm)	Processor	Red	2nd Consecutive Failure of Vapor Processor Status test.	
ISD VP PRESSURE WARN	Processor	Yellow	90th percentile of 1 day ullage pressure exceeds 1 IWC.	• See Troubleshooting Guide 9513-003 found at www.vsthose.com. • Vapor Pressure Verification Test, VR 204 Exhibit 8 • Vapor Processor Activation Test, VR 204 Exhibit 9
ISD VP PRESSURE FAIL (ISD Site Shut-Down Alarm)	Processor	Red	2nd Consecutive Failure of Vapor Processor Overpressure Test	
VP RUNTIME FAULT	Processor	Yellow	Processor has continuously run for longer than allowed. (30 min)	• See Troubleshooting Guide 9513-003 found at www.vsthose.com. • See TLS 350 PMC Setup Procedure • Vapor Pressure Verification Test, VR 204 Exhibit 8 • Vapor Processor Activation Test, VR 204 Exhibit 9
VP EMISSION WARN	Processor	Yellow	Mass emission exceeded the certified threshold.	• See Troubleshooting Guide 9513-003 found at www.vsthose.com. • Hydrocarbon Sensor Verification Test, VR 204 Exhibit 6 • Vapor Processor Activation Test, VR 204 Exhibit 9
VP EMISSION FAIL	Processor	Red	2nd Consecutive Mass emission test failure.	
VP DUTY CYCLE WARN	Processor	Yellow	Duty cycle exceeds 18 hours per day 0r 75% of 24 hours.	• See Troubleshooting Guide 9513-003 found at www.vsthose.com. • See TLS 350 PMC Setup Procedure • Vapor Pressure Verification Test, VR 204 Exhibit 8 • Vapor Processor Activation Test, VR 204 Exhibit 9 • TP 201.3 Test, VR 204 Exhibit 4
VP DUTY CYCLE WARN	Processor	Red	2nd Consecutive Duty Cycle Test Failure.	

3 *Post-Installation Power-Up Tests*

During post-installation testing, **the *Processor* will use outside air, not gasoline vapor from the USTs to conduct these tests.**

- **Close the 3 valves located on the inlet and the outlet of the *Processor.***
- **Remove the plugs on the 3 tees located on the inlet and the outlet of the *Processor.***

3.1 Required Post-Installation Power-Up Tests

- Once you have properly prepared the *Processor* for testing, conduct the following 5 tests:

	Test	Section #	Page #
1.	Electrical Connection Check	15	33
2.	*Processor* Leak Test	15	33
3.	Motor Rotation Test	15	36
4.	Heat-Trace Temperature Test	15	41
5.	HC Sensor & HC Sentry 24 Power Test	15	41

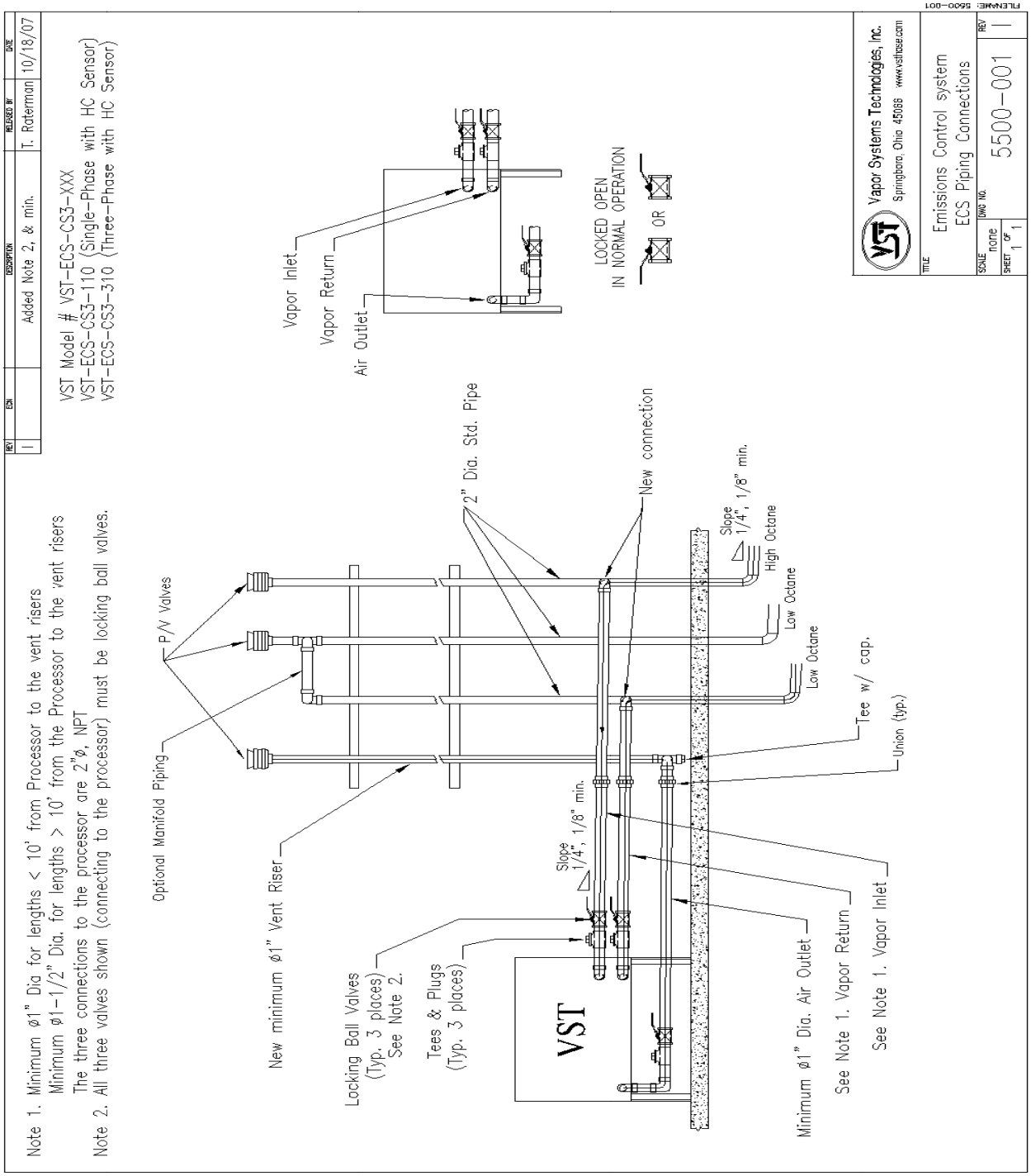

Figure 10: ECS Piping Configuration

3.2 TLS Manual Mode

- Follow the steps at the TLS console to put theTLS-350 in the Manual "**OFF**" Mode, as shown in **Figure 11: Section 15 / Page 32**.

- After the post-installation power-up tests are complete, put the *Processor* in the Manual "**OFF**" position.

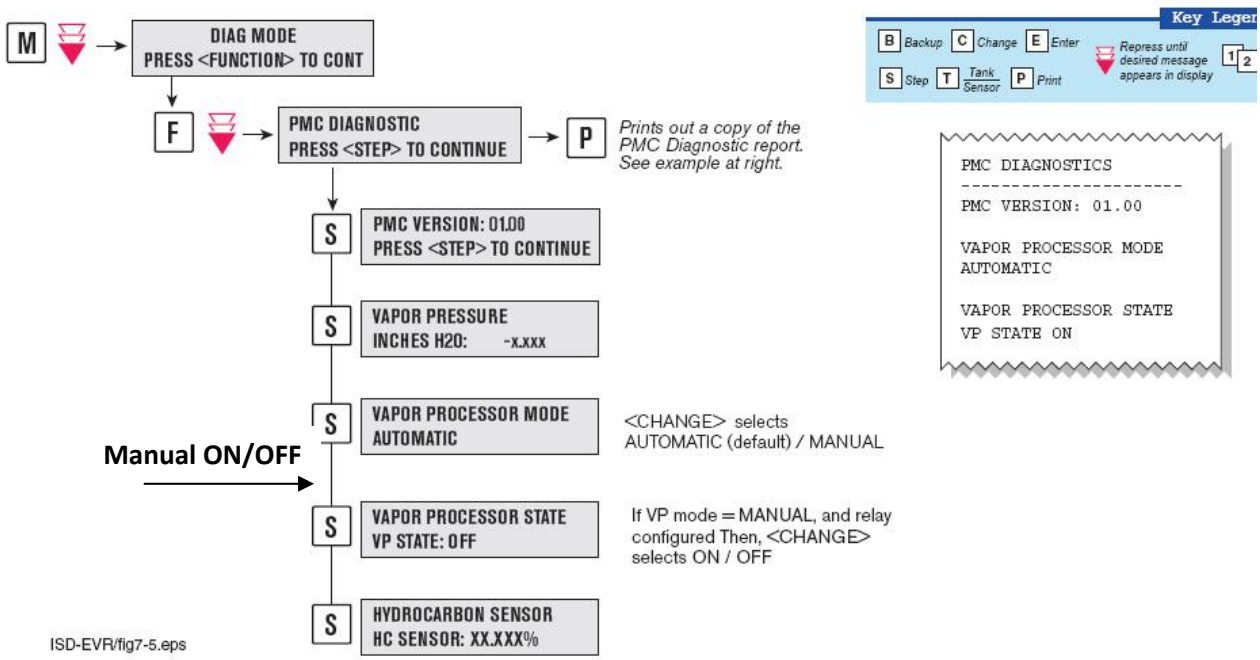

Figure 11: ISD Diagnostic Menu

3.3 Electrical Connection Test

- With the TLS in the Manual "**OFF**" Mode as shown in the diagnostic menu in **Figure 11: Section 15 / Page 32.**

- Check all electrical and control connections prior to applying power to the *Processor*.

- Make sure that all connections have been made to the proper terminals and that all connections are tight.
  - In the electrical room:
    - HC Sentry 24VDC (output) / 115V power
    - Fused disconnects
    - Panel breaker wiring connections
    - Starter
    - TLS 4-relay module
    - TLS multi-port card

  - At the ECS:
    - Blower motor
    - Vacuum pump motor
    - Heat trace cable
    - HC sensor
    - All equipment grounds

C A U T I O N

Always obtain approval from the local authority having jurisdiction.

Installation of the *Processor* must comply with (if applicable):

- **CARB CP-201**
- **VST EVR E.O.**
- **Fire Marshall**
- **Water Board**
- **Local Air Pollution District**
- **ICC**
- **NEC**
- **NFPA 30 and 30A**
- **UL**
- **Any other applicable federal, state, and local codes**

3.4 *Processor* Leak Test

- Conduct this test with the TLS in the Manual "**OFF**" Mode, as shown in **Figure 11: Section 15 / Page 32.**

- Physically check all fittings for tight connections.

- All tubing fittings are a special UL approved flare-fitting and designed for gasoline- vapor applications.

  - For a leak-proof connection, these fittings are made to be repeatedly disassembled and reassembled.

3.4.1 Tools needed to conduct the *Processor* Leak Test:

- NPT steel test plug (sized for the tee), drilled and tapped with a ¼" NPT hole, and centered in the plug.
- A pressure supply generating 2.0 ± 0.1 PSI.
- A pressure gauge, 0-5 PSI, ¼" NPT bottom connection, 2-1/2" face (NOSHOK, 25-200-5-PSI, ¼" NPT bottom, 2-1/2" face)
- Pressure regulator capable of an outlet pressure of 2.0 PSI, ¼" NPT connections (McMaster-Carr, 1888K1, 0-15 output pressure, 250 max. pressure, ¼" NPT)
- ¼" NPT 3-way isolation/line/relief valve
- ¼" NPT x 2" nipple (3-each)
- ¼" NPT tee
- ¼" NPT fitting to connect the compressed air supply
- See **Figure 12: Section 15 / Page 34**

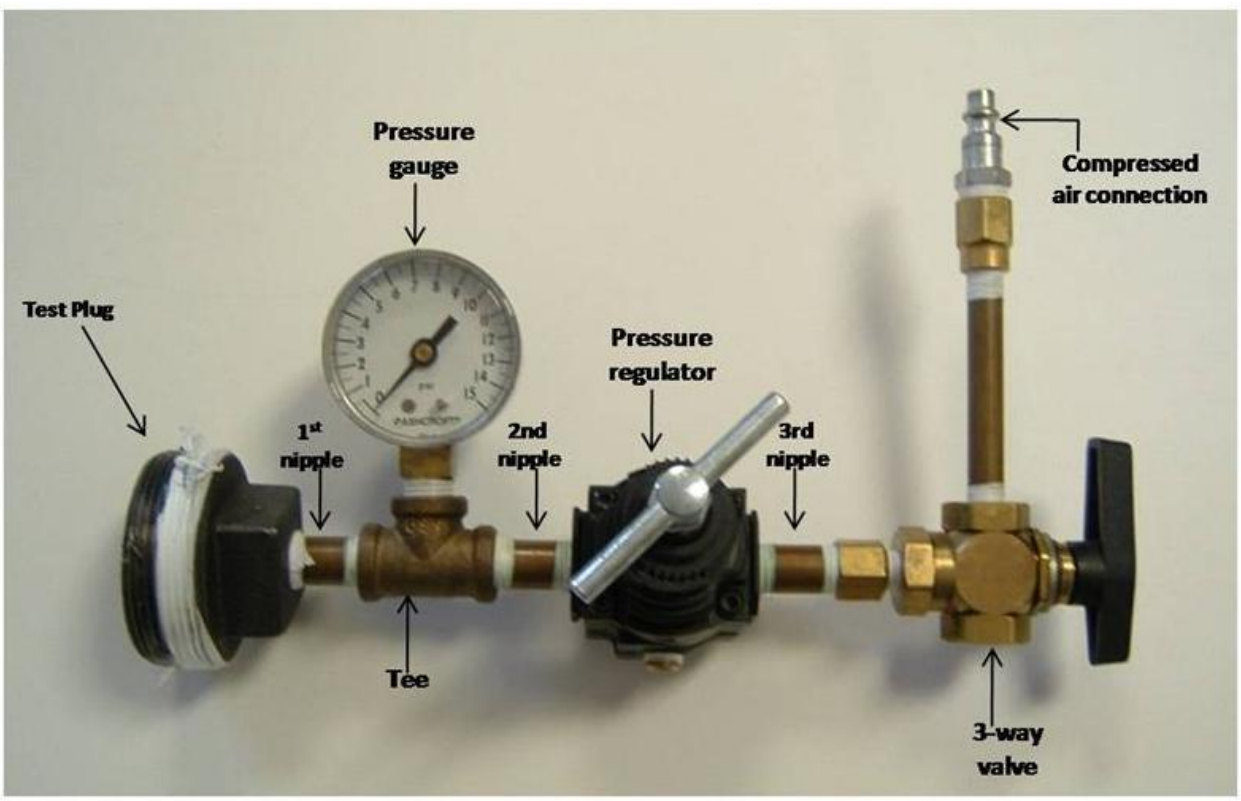

Figure 12: Leak Test Fixture

3.4.2 *Processor* Leak Test Steps

- With the TLS in the Manual "**OFF**" Mode, check all electrical connections.

- Make sure the three valves at the *Processor* are closed.

- Install NPT plugs on the vapor return and the air outlet.
  - **See ECS Membrane *Processor* Piping Configuration** as shown in **Figure 10: Section 15 / Page 31.**

- Install a NPT test-plug on the vapor inlet-tee and attach the:
  - 1st Nipple
  - Tee
  - 2nd Nipple
  - Pressure Gauge
  - Pressure Regulator
  - 3rd Nipple
  - Valve

- With the pressure-test equipment attached to the vapor inlet on the *Processor*, connect the compressed air to the test fixture.
  - Open the 3-way valve to allow the *Processor* to pressurize to 2.0 PSI.

- With the *Processor* pressurized to 2.0 PSI, spray a soapy solution on each fitting to check for bubbles.

  - If air bubbles do not appear, the connection is tight.
  - If air bubbles do appear, tighten the leaking fitting 1/8" turn and re-check for leaks.

- Continue this process until all the internal tube fittings have been checked and found to be leak free.

- Remove the compressed air connection to the *Processor*.

  - Release the pressure from inside the *Processor*.
  - Remove the test fixture and test plug.

- If the fittings cannot be tightened so the connection is leak free, replace the tube/45° flare nuts assembly.

- Once this test is complete, remove the NPT plugs on the vapor return and the air outlet.

3.5 Motor-Rotation Test

- The purpose of this test is to insure that the motors are rotating in the correct direction.
- Put the *Processor* in the manual **ON** Mode at the TLS as shown in the diagnostic menu in **Figure 11: Section 15 / Page 32** and that the cover is off the *Processor*.
    - Visually check the motor rotation for the vacuum pump and blower motor to be sure they are rotating according to the arrows that are shown on the equipment.
    - The rotation of the motors can be visually checked by looking at the rotation of the fan located on the end of each motor.
- If the motors are rotating in the proper direction, put the TLS in the manual **OFF** mode.
- If either of the motors are not rotating in the correct direction:
    - Put the *Processor* in the manual "**OFF**" Mode at the TLS.
    - Turn **OFF** and lock out power to the *Processor* at the main distribution panel.
    - Follow safety regulations regarding lock-out / tag-out procedures to insure power cannot be turned on to the *Processor*.
    - Three-Phase Motors:
        - At the motor junction box at the ECS *Processor*, switch any two of the three power circuits for the motor that is not rotating in the correct direction.
        - **See Figures: Section 15 / Page 38, Figure 14 / Page 40, Figure 16**
    - Single-Phase Motors:
        - Check the wiring connection diagrams for the specific motor that is not rotating in the correct rotation and correct as required.
        - **See Figures: Section 15 / Page 37, Figure 13 / Page 39, Figure 15** for motor wiring diagrams.
    - Remove the lock from the lock-out and apply power to the *Processor*.
    - Return the *Processor* to the manual **ON** Mode at the TLS.
    - Re-check the equipment for proper rotation.
    - Return the *Processor* to the manual **OFF** mode at the TLS.

If either motor will not run, see **the ECS Troubleshooting Guide found on the VST website at www.vsthose.com.**

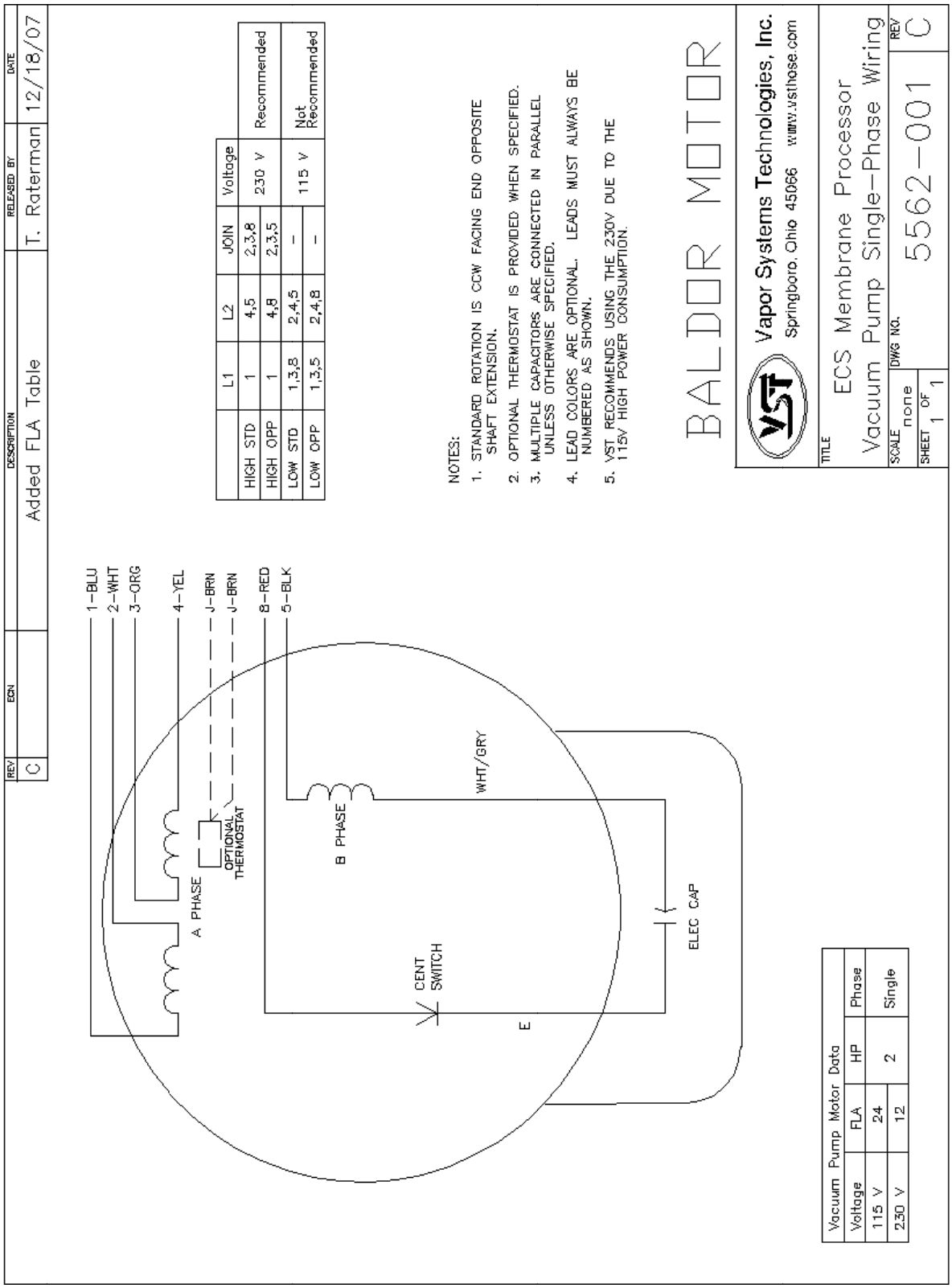

	L1	L2	JOIN	Voltage	
HIGH STD	1	4,5	2,3,8	230 V	Recommended
HIGH OPP	1	4,8	2,3,5		
LOW STD	1,3,8	2,4,5	–	115 V	Not Recommended
LOW OPP	1,3,5	2,4,8	–		

Vacuum Pump Motor Data			
Voltage	FLA	HP	Phase
115 V	24	2	Single
230 V	12		

Figure 13: Vacuum Pump: Single-Phase Motor Wiring Diagram

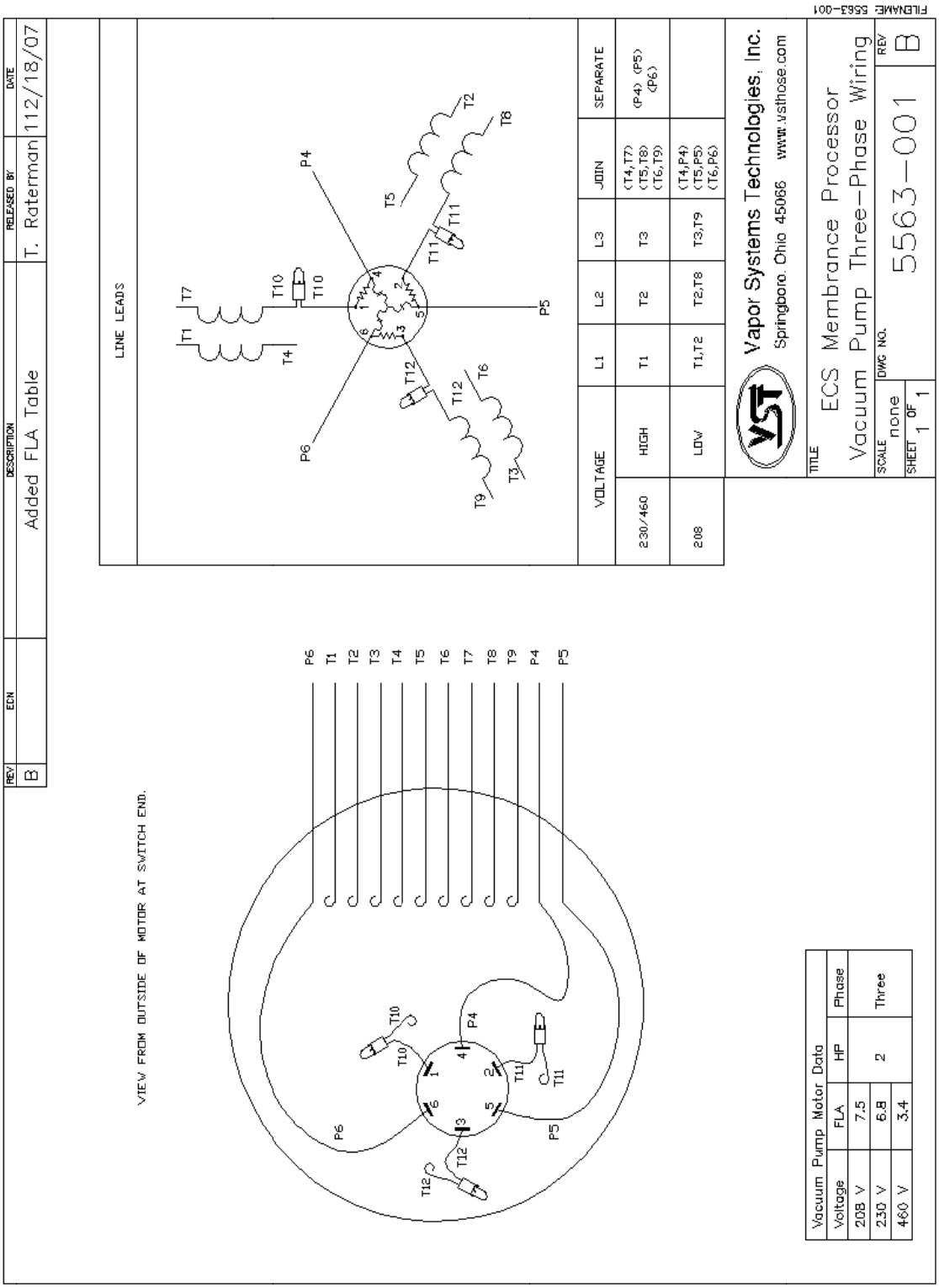

Figure 14: Vacuum Pump: Three-Phase Motor Wiring Diagram

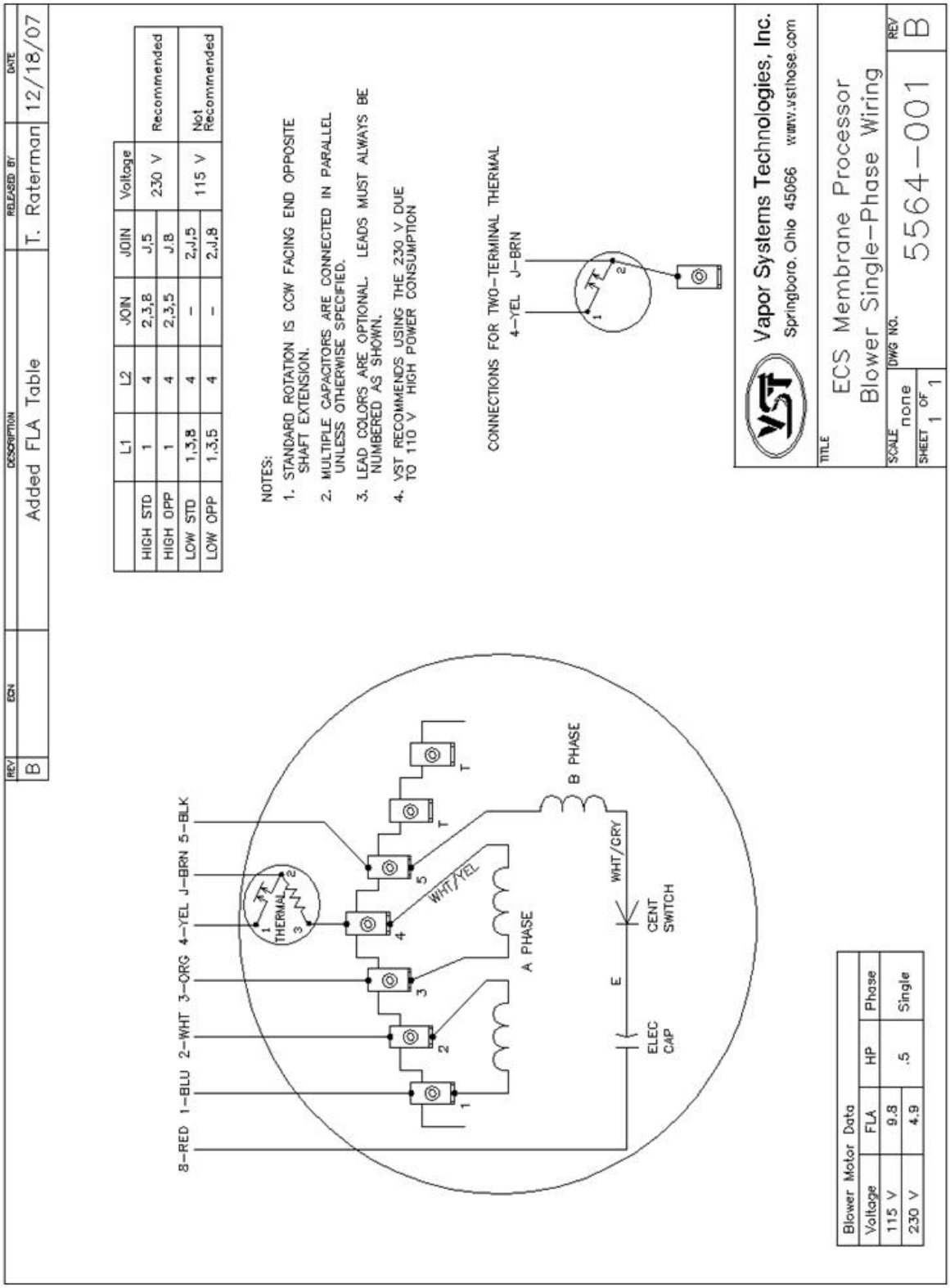

Figure 15: Blower: Single-Phase Motor Wiring Diagram

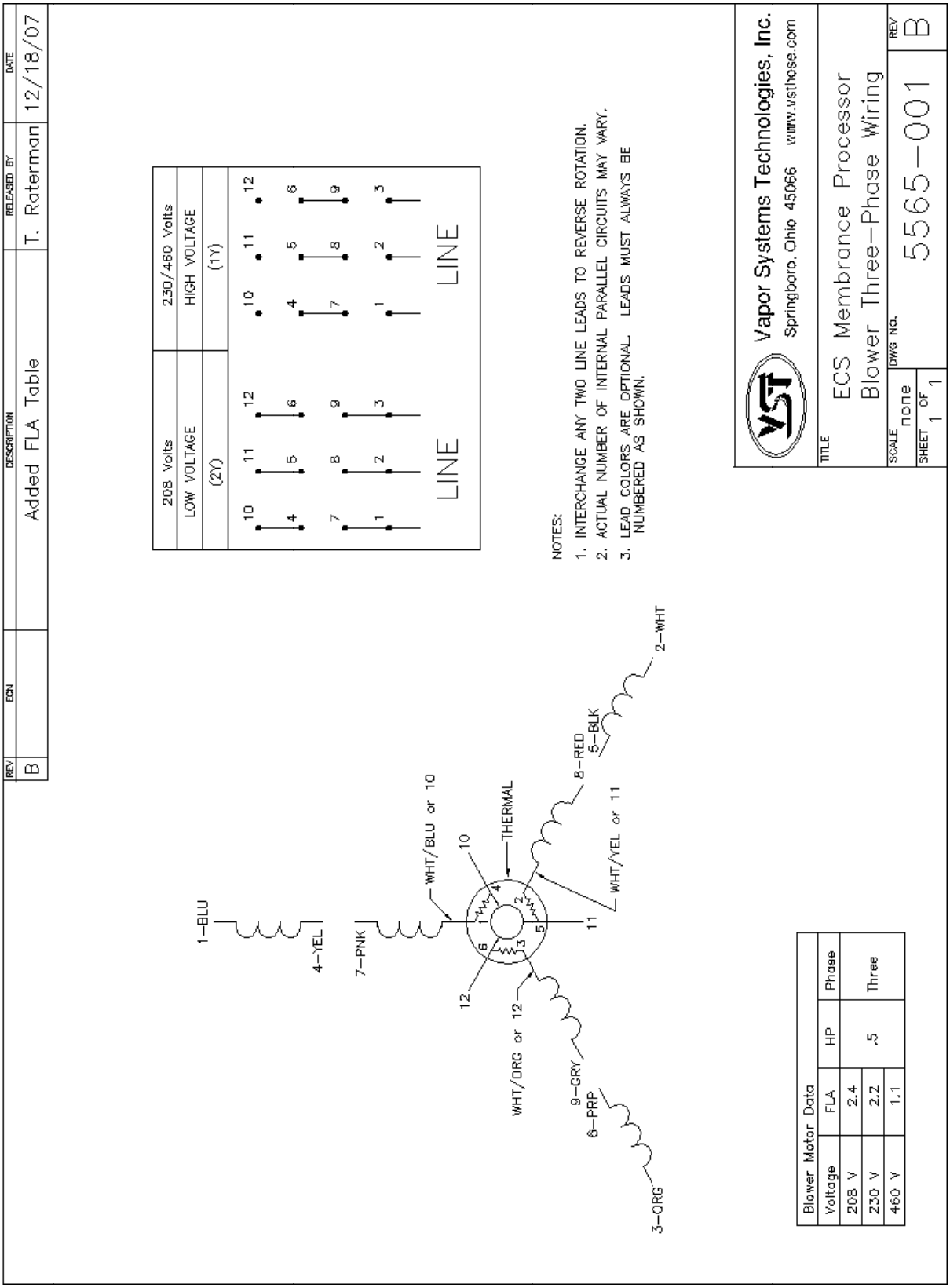

Figure 16: Blower: Three-Phase Motor Wiring Diagram

3.6 Heat-Trace Temperature Test

- The purpose of this test is to insure that the electrical connection to the heat-trace cable is properly established and that the membrane housing has a temperature between 100°-150° F.

  (Note: An infrared temperature sensor may be used in place of the temperature probe.)

- With power on to the heat-trace cable, use a temperature probe to check the temperature inside the fiberglass insulation.

  - Gently insert the probe tip 2”- 3” from the top between the membrane housing and the heat trace cable.
  - Leave the probe tip inside for two minutes for temperature stabilization.
  - The temperature should reach 100°-150°F in two minutes.
  - If the heat trace does not come up to temperature, **see the *Processor* Troubleshooting Guide at www.vsthose.com.**

3.7 HC Sensor and HC Sentry Power Test

- The purpose of this test is to insure there is 24VDC power to the HC sensor and the HC Sentry module.

3.7.1 Checking 24 VDC Power to the HC Sensor

- The 24VDC power to the HC sensor is from the HC Sentry Module.
- Using the multimeter, check the + to Gnd connection on the HC Sentry.
- If there is no 24VDC power, check power to the HC Sentry module.

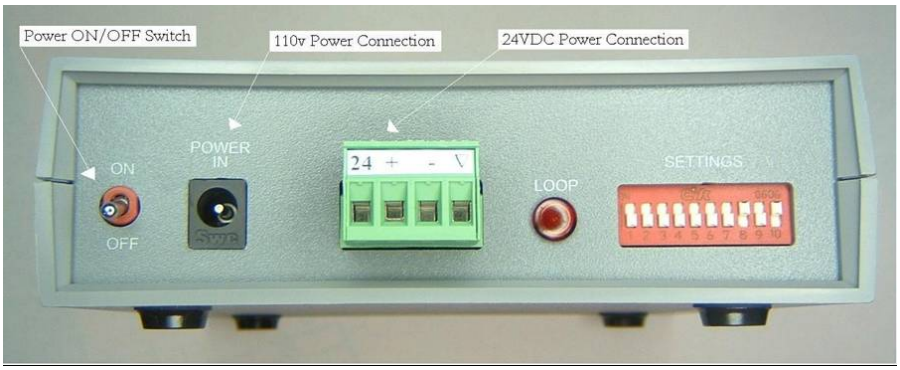

Figure 17: HC Sentry Interface Module Front View: Power and ON/OFF Switch

- If the unit does not function properly, see the **ECS Troubleshooting Guide found on the VST website at www.vsthose.com**.

3.7.2 Checking 24VDC Power to the HC Sentry Module

- The HC Sentry is powered from a 115V outlet and uses a 115v/24VDC power converter, which is VST supplied.
- Check that the unit is **ON**.
- Check that the Power Light is **ON**.
- If the power light is not **ON** when the unit is **ON**:
  - Check to make sure there is 115v power to the outlet.
  - Check the **ON** switch on the HC Sentry module.
  - Check that the 115v/24VDC power converter is functioning.
  - If the unit does not function properly, **see the ECS Troubleshooting Guide at www.vsthose.com.**

Figure 18: HC Sentry Interface Module Back View: Power "ON" Light

3.8 Preparing the *Processor* for Field Operation

- After all the post-installation power-up tests are complete:
- Replace the plugs on the 3 tees located on the inlet and the outlet of the *Processor* and tighten.
- Lock in the open position the 3 valves located on the inlet and the outlet of the *Processor.*
- Leave the *Processor* in the manual "**OFF**" mode at the TLS 350.
- See Figure 11: Section 15 / Page 32.
- Complete the Post-Installation Power-Up checklist forms.

3.9 Post-Installation Power-Up Checklist

Post-Installation Power-Up Checklist Form		
VST-ASC #:	Date:	
ASC Name:		
VST-ASC Certification Level:		
ASC Company Name:		
GDF Name:		
Address:		
City:	State:	ZIP Code:
GDF Contact Person Name:		
GDF Contact Person Title:		
GDF Contact Person Phone:		
GDF Contact Person E-mail:		
Notes		
Use the form on the following page to note details of the power-up.		

	ECS *PROCESSOR* COMPONENTS	Passed	Failed	Repaired	Replaced	Action Items if Required
	All electrical connections checked	☐	☐	☐	☐	
	Processor internal tubing leak checked	☐	☐	☐	☐	
	Blower motor rotation checked	☐	☐	☐	☐	
	Vacuum pump motor rotation checked	☐	☐	☐	☐	
	Heat-trace temperature checked	☐	☐	☐	☐	
	HC sentry power checked	☐	☐	☐	☐	
	HC sensor power checked	☐	☐	☐	☐	

4 *Processor Start-Up*

- Use the following start-up procedure:
  - When initially starting the *Processor* or
  - When re-starting the *Processor* following maintenance or testing.

	START-UP PROCEDURE
1.	• Make sure the plugs are installed on the 3 tees at the *Processor*.
2.	• Make sure all 3 valves are locked in the OPEN position at the *Processor*.
3.	• Make sure power is on to the: ▸ Heat-trace cable ▸ HC sentry ▸ HC sensor ▸ ECS vacuum pump ▸ ECS recirculation blower
4.	• Make sure the pressure sensor is operational.
5.	• Make sure that the GDF is vapor tight. **(TP 201.3)** • **EO-VR- 204 Exhibit 4**
6.	• Put the TLS in the **AUTOMATIC MODE**. • If the pressure is above +0.2” WC, the *Processor* will start and the auxiliary relays will close. • If the pressure is below +0.2” WC, the *Processor* will not start because the UST system-pressure is below the high pressure threshold.

- **CAUTION: Locking ball valve handles at the *Processor* inlet and outlet must not be removed.**

4.1 *Processor* Shut-Down

- CAUTION: POWER TO THE HC SENSOR AND THE HEAT TRACE CABLE MUST BE TURNED OFF INDIVIDUALLY FROM DIFFERENT POWER SOURCES. THEY DO NOT RECEIVE THEIR POWER FROM THE SAME SOURCE AS THE MOTORS.

- The *Processor* may be turned **OFF** for maintenance or testing.
- No special requirements are needed to turn **OFF** the *Processor*.
- The three-phase (208/230-460v) and the single-phase (115/230v) disconnect-switch or the electrical-panel breakers can be turned **OFF** to remove power from the *Processor*.

4.2 HC Sensor and HC Sentry Module

- The 115VAC/24 VDC power supply for the HC Sentry Module / HC sensor can be unplugged, which will remove power to the HC Sensor in the *Processor*.

4.3 Heat-Trace Cable

- The heat trace cable should not be turned **OFF** unless maintenance is performed in an area that could cause electrical shock.
- Turn **OFF** power to the heat-trace cable from the 115v electrical-panel breaker.

5 *Processor Maintenance*

- The VST Emissions Control System consists of only two components having moving parts: a blower and a vacuum pump.

- The remaining components require little scheduled maintenance:
  - Membrane with housing
  - Heat trace cable
  - HC sensor

- Because the system continually monitors itself and notifies you of any problems or situations, it requires very little attention.

- The table on the following page outlines the required annual inspections and tests.
  - Preventative Maintenance Checklist Form: **Section 15: Page 51.**
  - GDF Maintenance Records: **Section 15: Page 52**.

Annual System Compliance Testing	
Static Pressure Test:	TP-201.3 EO-VR-204: Exhibit 4
Dynamic Back Pressure Test:	TP-201.4
Liquid Removal Test Procedure:	EO-VR-204-A: Exhibit 5
Hydrocarbon Sensor Verification Test:	EO-VR-204-A: Exhibit 6
Vapor Pressure Sensor Verification Test:	EO-VR-204-A: Exhibit 8
VST *Processor* Activation Test:	EO-VR-204-A: Exhibit 9
Nozzle Bag Test Procedure:	EO-VR-204-A: Exhibit 10
ISD Operability Test: (Flow Meter Operability Test)	EO-VR-204-A: Exhibit 11

5.1 Annual Inspections and Maintenance

Annual *Processor* Inspections and Replacements					
Component	**Procedure**	**Fail Criteria**	**Corrective Action**	**Reference Manuals**	**Authorized Personnel**
Blower	Replace the blower every ten years or 15,000 hrs. (whichever comes first).			Section 15 / Page 53 Section 15 / Page 55	VST ASC Level C
Vacuum pump	Replace blower every ten years or 15,000 hrs. (whichever comes first).				
Vacuum pump drive coupling - rubber insert	Visually inspect the drive coupling between the vacuum pump and the motor for wear	Rubber debris is found on or around the vacuum-pump base.	Replace the drive coupling rubber insert	Section 15 / Page 62	
Heat Trace Cable	Check the temperature of the membrane housing Section 15 / Page 43	If the membrane housing temperature is outside the 100°-150°F range.	Replace the heat- trace cable	Section 15 / Page 64	
HC Sensor	Test the HC sensor (EO-VR-204-A: Exhibit 6)	The difference shall be within ±1.0% HC concentration from the calibration gas concentration. Record "Pass" if within ±1.0% or "Fail" if not within ±1.0%.	Replace the HC Sensor	Section 15 / Page 76 EO-VR-204-A: Exhibit 6	

Preventative Maintenance Checklist Form

Component	Frequency	Date Inspected	Completed	Required Action Items
PROCESSOR	**Yearly**			
Inspect drive coupling on the vacuum pump			[ ]	
Check temperature of the membrane housing			[ ]	
RECIRCULATION BLOWER				
Replace every 10 years or 15,000 hours, whichever comes first.			[ ]	
VACUUM PUMP				
Replace every 10 years or 15,000 hours, whichever comes first.			[ ]	

5.1.1 GDF Maintenance Record

Date of Maintenance/ Test/Inspection/Failure (including date and time of maintenance call)	Repair date to correct test failure	Maintenance/Test/Inspection Performed and Outcome	Affiliation	Name and Technician ID Number of Individual Conducing Maintenance or Test	Telephone Number

Component Replacement

6 Blower Replacement

6.1 Safety

Use lockout / tagout procedures prior to starting work.

6.2 Removing the Blower

1. Put the TLS 350 in the manual **"OFF"** mode.
   - **See Figure 11: Section 15 / Page 32 for instructions.**

2. Disconnect power to the blower and vacuum pump motors.

3. Completely remove the two blower ¾" - 45° flare inlet and out tubes.
   - **See Figure 19: Section 15 / Page 54 for instructions.**
   - **NOTE:** ***The nuts on the tubing are ¾" 45º flare, use caution not to damage the flared ends on the tubing or the threads on the nuts after removal.***

4. Remove the two 45º flare inlet and outlet connection fittings from the blower.

5. Disconnect and remove the blower electrical from the motor.
   - **See Figure 20: Section 15 / Page 54 for instructions.**

6. Remove (4) ¼" x ¾" mounting bolts.
   - The 4 holes in the blower stand are tapped 1/4".
   - Keep the (4) ¼" bolts for reuse or replace them with new ones.
   - **CAUTION: The blower end of the blower/motor assembly is heavier than the motor end, which may cause the blower to fall off the stand. USE CAUTION when removing the bolts.**

7. Remove the blower from the stand.

6.3 Installing the New Blower

1. Place the new blower on the blower stand.

2. Install and hand tighten the (4) ¼" x ¾" blower mounting bolts.

3. Install the two 45º flare inlet and outlet connection fittings into the blower.

4. Install the ¾" inlet and outlet tubing.
   - Do not use any thread-sealing compound when assembling the 45º flare nuts.
   - **NOTE: When tightening the 45° flare nuts: Clamp the tube flare between nut and nose body of the tube by screwing the nut on finger tight. Tighten with a wrench an additional ¼ turn for a metal-to-metal seal.**

5. After the tubing is installed and the 45° flare nuts tightened, tighten the (4) mounting bolts.

6. Reconnect the electrical power wires to the blower motor.

7. Remove the lock(s) and tags from the lockout & tagout.

8. Turn **ON** power to the blower and vacuum pump.

9. Put the TLS-350 in the manual **ON** mode.

10. Check rotation of the blower motor.
    - Refer to Section 15 : Post-Installation Power-Up Test: Motor Rotation Test.

11. Conduct a *Processor* Leak Check. Refer to Section 15: Post-Installation Power-Up Test.

12. After work is completed, put the TLS-350 in the **AUTOMATIC** mode.
    See Figure 11: Section 15 / Page 32 for instructions.

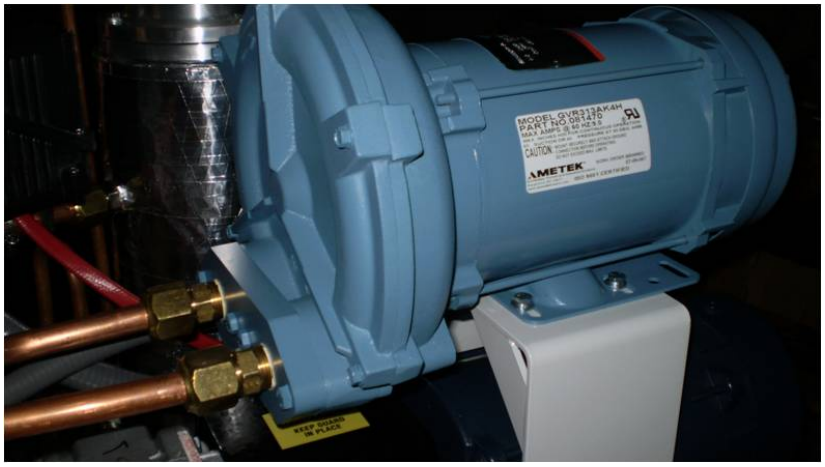

Figure 19: Blower inlet and outlet tubing connections and mounting bolts

Figure 20: Blower electrical connection conduit

7 Vacuum Pump Replacement

7.1 Safety

Use lockout / tagout procedures prior to starting work.

7.2 Removing the Vacuum Pump

1. Put the TLS 350 in the manual **"OFF"** mode.
   - **See Figure 11: Section 15 / Page 32 for instructions.**

2. Disconnect power to the blower and vacuum pump motors.

3. Completely remove the vacuum pump ½" outlet tubing
   - **See Figure 21: Section 15 / Page 57**

4. Completely remove the vacuum pump ½" and ¼" inlet 45º flare tubing and all pipe fittings connected to the vacuum pump
   - **See Figure 22: Section 15 / Page 57**

5. Completely remove the ¼" HC sensor inlet tubing at the air outlet and the HC sensor
   - **See Figure 23: Section 15 / Page 58**

   - **NOTE: The tube ends are a Parker 45º flare, use caution not to damage the flared ends on the tubing or the threads on the nuts after removal.**

6. Disconnect and remove the vacuum pump electrical from the motor.

7. Remove (4) ¼" x 1-½ " mounting bolts
   - Keep the (4) bolts for reuse or replace with new

8. Slide the vacuum pump out from under the blower stand

7.3 Installing the new Vacuum Pump

1. Slide the new vacuum pump under the blower stand and align the mounting holes.

2. Install the (4) ¼" x 1-½" vacuum pump base mounting bolts.

3. Tighten the mounting bolts so that the bottom of the vacuum pump base is ⅛" from the ECS base.

4. Re-install the ½" and ¼" inlet 45° flare tubing and all pipe fittings connected to the vacuum pump.

5. Re-install the ½" outlet tubing.

6. Re-install the ¼" HC sensor inlet tubing.
   - Do not use any thread sealing compound when assembling the 45 º flare nuts
   - **NOTE: When tightening the 45° flare nuts: Clamp the tube flare between nut and nose body of the tube by screwing the nut on finger tight. Tighten with a wrench an additional ¼ turn for a metal-to-metal seal.**

7. Reconnect the electrical power wires to the vacuum pump motor.

8. Remove the lock(s) and tags from the lockout & tagout.

9. Turn on power to the blower and vacuum pump.

10. Check rotation of vacuum pump motor.
    - **Refer to Section 15 / Page 36.**

11. Conduct a *Processor* Leak Check.
    - **Refer to Section 15 / Page 33.**

12. After work is completed, put the TLS-350 in the **AUTOMATIC** mode.
    - **See Figure 11: Section 15 / Page 32 for instructions.**

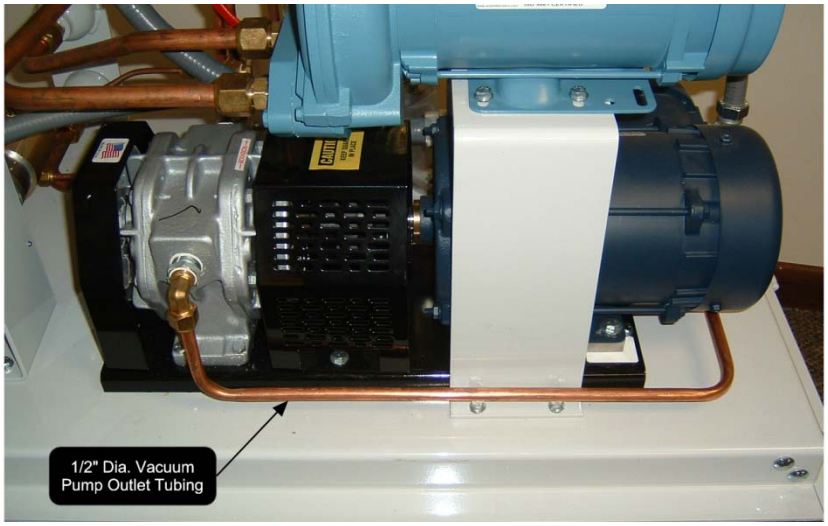

Figure 21: Vacuum pump outlet tubing connection

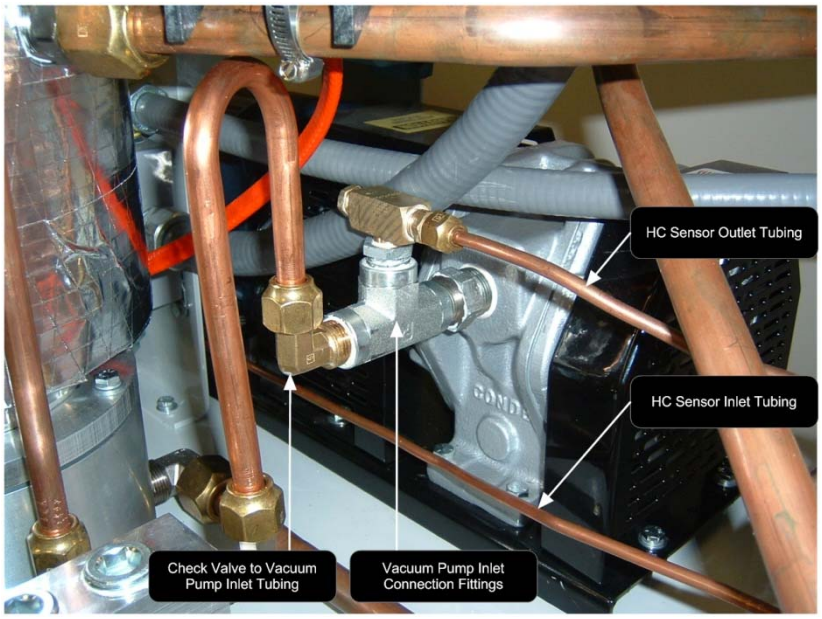

Figure 22: Vacuum pump inlet tubing and fittings

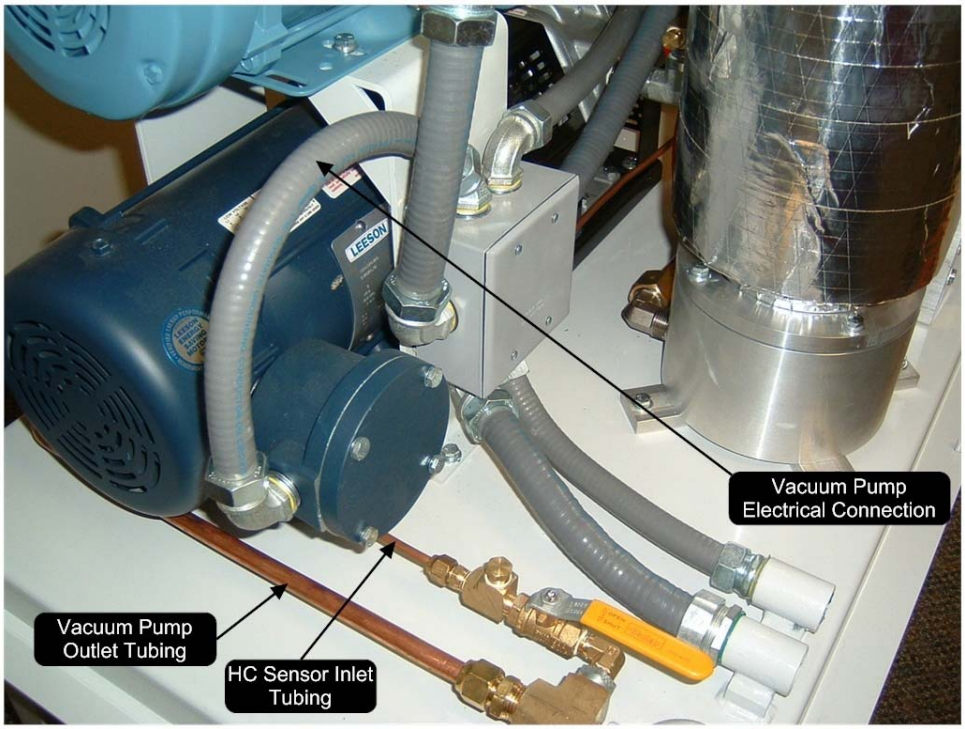

Figure 23: Vacuum pump electrical connection / vacuum pump outlet tubing / HC sensor inlet tubing

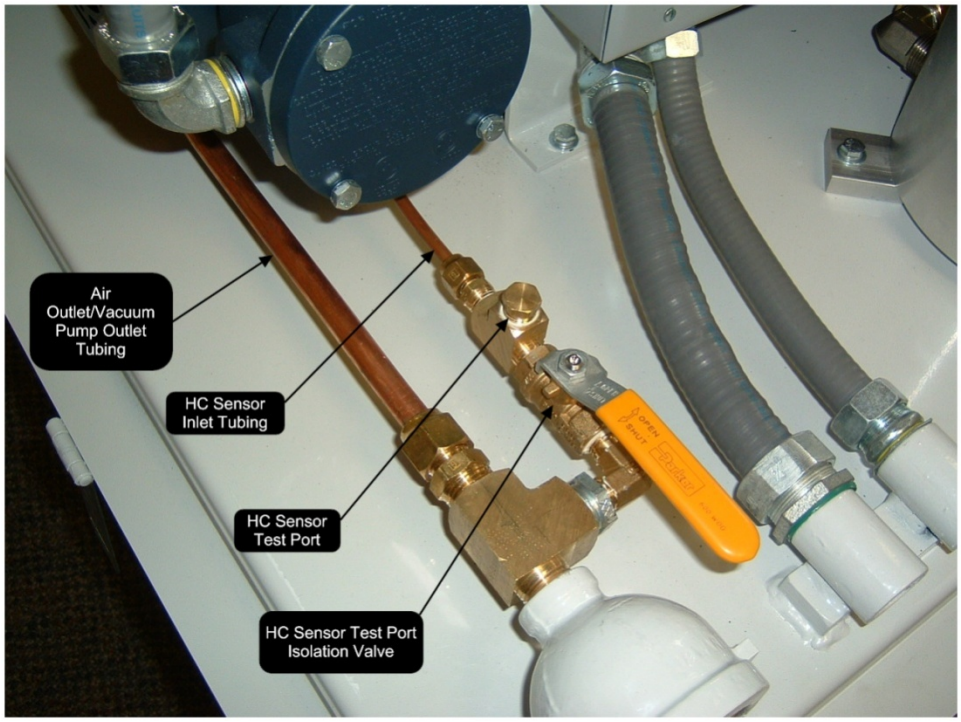

Figure 24: Air outlet / vacuum pump outlet / HC sensor inlet tubing

8 Membrane Replacement

8.1 Safety

Use lockout / tagout procedures prior to starting work.

8.2 Removing the Membrane from the Membrane Housing

1. Put the TLS 350 in the manual **"OFF"** mode.
   - **See Figure 11: Section 15 / Page 32 for instructions.**

2. Disconnect power to the heat trace cable, the vacuum pump, and the blower.

3. Disconnect and remove the ½" 45º flare tubing from the top and side of the membrane housing:
   - **See Figure 25: Section 15 / Page 59**
   - **NOTE: The nuts on the tubing are ¾" 45° flare. Use caution not to damage the flared ends on the tubing or the threads on the nuts after removal.**

4. Remove the (4) ¼" bolts from the top plate (on top of the membrane housing).

Figure 25: Membrane housing

5. Keep the (4) bolts/washers/lock washers for reuse.

6. Remove the top plate. A small lever may have to be used to gently pry the top plate off the membrane housing.
   - The top plate seals against the vertical tube with an o-ring. Use caution when removing the top plate.
   - The membrane is now exposed.
   - **See Figure 26: Section 15 / Page 59**

Figure 26: Exposed membrane with the top plate removed

7. Gently screw the membrane removal tool into the top of the membrane.
   - Screw the removal tool into the membrane until the threads bottom out.
   - **See Figure 27: Section 15 / Page 60**
   - **CAUTION: Do not over tighten the removal tool when screwing into the membrane.**

Figure 27: Membrane extraction tool

8. Gently move the removal tool side-to-side while pulling up with moderate force until the membrane becomes loose.
   - **CAUTION: Do not use excessive force or a twisting action to remove the membrane as these items may cause damage to the membrane epoxy potting**.
   - There are two o-rings on the inside bottom of the vertical tube causing resistance in removing the membrane
   - An aluminum insert **(Figure 28: Section 15 / Page 60)** may still be attached to the bottom of the membrane or will stay in the membrane-housing base.
   - **DO NOT LOSE THE INSERT AS IT WILL BE NEEDED TO COMPLETE THE MEMBRANE INSTALLATION AND MAKE THE MEMBRANE OPERATION FUNCTIONAL.**

9. Remove the removal tool from the membrane.

10. Remove and discard the (4) o-rings:
    - **(2) O-rings on the membrane**
    - **(2) O-rings on the base insert**
    - **Keep the vertical tube top o-ring for re-use.**

Figure 28: Membrane / base insert

8.3 Installing the New Membrane

1. Install (4) new O-rings:
   - (2) O-rings on the membrane (VST Part #5006-012).
   - (2) O-rings on the base insert (VST Part #5006-013).

2. Use only silicon grease (not hydrocarbon-based grease) on the o-rings prior to installation.
   - Hydrocarbon-based grease or lubricant will emit hydrocarbon vapors, which will be measured by the HC sensor and will cause inaccurate gas-level readings.

3. With (2) new o-rings on the "insert" installed, place the "insert" into the bottom of the base as orientated in **Figure 28: Section 15 / Page 60**.

4. With the (2) membrane o-rings installed, place the membrane into the membrane housing.
   - Apply a moderate downward force with a mild side-to-side action to seat the membrane in the membrane base.

5. Install the existing top vertical tube o-ring (re-lubricated). Install the top plate.
   - The top plate will seat on the vertical tube o-ring while bolting the top plate in place.
   - **DO NOT USE FORCE TO SEAT THE TOP PLATE.**

6. Install the (4) ¼" bolts/washers/lock washers in the top plate/retaining ring to secure the top plate.

7. Tighten the (4) bolts to 85 in-lbs in a cross-pattern using 20%, 40%, 60%, 80%, 90%, 100% of torque.
   - This cross-pattern torque procedure will evenly seat the top plate to the vertical tube.

8. Re-install the ½" 45° flare tubing from the top/side of the membrane housing.
   - Note: When tightening the 45° flare nuts: Clamp the tube flare between nut and nose body of the tube by screwing the nut on finger tight. Tighten with a wench an additional ¼ turn for a metal-to-metal seal.

9. Remove the lock(s) and tags from the lockout & tagout.

10. Turn **ON** power to the heat trace, blower, and vacuum pump.

11. Put the TLS-350 in the manual **ON** mode.

12. Perform a *Processor* Leak Test. **See Section 15 / Page 33 for instructions.**

13. After work is completed, put the TLS-350 in the **AUTOMATIC** mode.
    - **See Figure 11: Section 15 / Page 32 for instructions.**

9 *Drive Coupling Rubber Insert Replacement*

9.1 Safety

Use lockout / tagout procedures prior to starting work.

9.2 Removing the Drive Coupling Insert

1. Prior to starting work, put the TLS-350 in the Manual **OFF** mode
   - **See Figure 11: Section 15 / Page 32 for instructions.**

2. Disconnect power to the blower and vacuum pump motors

3. With the vacuum pump in-place on the ECS base, remove the drive coupling guard and the pump fan guard.
   - **See Figure 29: Section 15 / Page 62.**

Figure 29: Vacuum pump and motor assembly

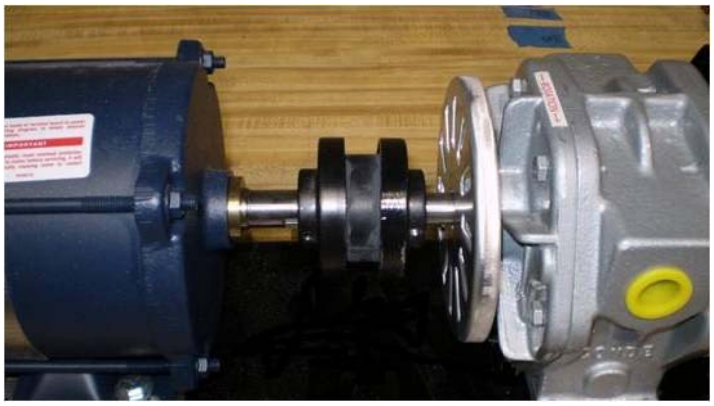

Figure 30: Vacuum pump with guard removed

4. Un-bolt the vacuum pump from the base and move away from the motor. Be sure to mark and keep any shims used under the vacuum pump for re-use.
   - Keep the bolts for re-use.
   - This will separate the drive coupling for removal of the rubber insert.
   - **See Figure 31: Section 15 / Page 63.**

Figure 31: Vacuum pump unbolted and moved away from the motor

5. Replace the rubber insert into the drive coupling.
   - Rubber coupling (VST Part # 5001-003)
   - **See Figure 32**: **Section 15 / Page 63.**

Figure 32: Drive coupling rubber insert

6. Slide the vacuum pump towards the motor.
   - Place any shims under the vacuum pump in their original location.
7. Bolt the vacuum pump to the vacuum pump base.
8. Install the drive coupling and fan guards.
9. Remove the lock(s) and tags from the lockout & tagout.
10. Turn **ON** power to the blower and vacuum pump.
11. Return the TLS-350 to the manual **ON** mode.
12. Perform a *Processor* leak test.
    - **See Section 15 / Page 33 for instructions.**
13. Perform a Motor Rotation Test
    - **Refer to Section 15 / Page 36.**
14. After work is completed, put the TLS-350 in the **AUTOMATIC** mode.
    - **See Figure 11: Section 15 / Page 32**.

10 Heat Trace Cable Replacement

10.1 Safety

Use lockout / tagout procedures prior to starting work.

10.2 Removing the Heat Trace Electrical Box

1. Prior to starting work, put the TLS-350 in the Manual "**OFF**" mode
   - **See Figure 11: Section 15 / Page 32 for instructions.**

2. Disconnect power to the heat trace cable.

3. Remove the entire heat trace electrical box from the ¾" tubing.

4. Disconnect and remove the heat trace cable from inside the electrical junction box.
   - Remove the top cover from the electrical junction box (be sure to keep the screws for reuse).
   - Remove the 115V and ground wires from the terminal block located inside the electrical junction box. **See Figure 33: Section 15 / Page 66**.
   - Remove the bottom plate (be sure to keep the screws for reuse).
   - Pull the heat trace cable out of the electrical box and bottom plate (be sure keep the rubber grommet for reuse).

5. Completely remove the 1" thick F/G insulation from the membrane housing.
   - Cutting on the insulation seam, remove the insulation (with the aluminum tape attached) in one piece and save for reuse.
   - **See Figure 34: Section 15 / Page 66**.

6. Peel the aluminum tape off the heat trace cable and discard.
   - This will expose the heat trace cable and end seal kit.

7. Disassemble the seal kit and remove the heat trace cable.
   - Retain the end seal kit parts for re-use.

10.3 Overview for Installing the New Heat Trace Cable

1. VST has found that making both the end seal kit and electrical junction box connection first to the heat trace cable works the best.

2. After both connections are made to the heat trace cable, attach the electrical junction box to the ¾" tube.

3. After the electrical junction box is attached to the ¾" tube, wrap the heat trace cable around the vertical tube starting at the bottom and wrapping towards the top, applying aluminum tape on each revolution.

4. The last step is to secure the end seal kit to the vertical tube.

10.4 Steps for Installing the New Heat Trace Cable

1. Install the end seal kit on the heat trace cable:
   - Using a multimeter, check the heat trace cable electrical circuit continuity at the electrical junction box to insure the circuit is complete and is not in a ground fault condition.
   - See **Figure 35: Section 15 / Page 66**. End Seal Kit Components
   - See the **Figures 36-37: Section 15 / Pages 67-68**. Chromalox End Seal Kit Installation Instruction (2-Pages -) to install the heat trace cable on the end seal kit
   - **Figure 38: Section 15 / Page 69**. Prepare the New Heat Trace Cable for installation into the End Seal Kit

2. Install the heat trace cable to the electrical junction box.
   - See **Figures 39-42: Section 15 / Pages 70-73**. Electrical Junction Box Installation Instructions, (4-Pages).

3. Attach the electrical junction box to the ¾" tube (attached to the membrane housing).

4. Wrap the heat trace cable around the vertical tube starting at the bottom and wrapping towards the top, applying aluminum tape on each revolution.
   - Be sure to install the heat trace cable **flat** against the membrane housing – free of twists.
   - Use nylon reinforced aluminum tape.

5. Secure the end seal kit/heat trace cable to the top section of the top section of the vertical tube.
   - See **Figure 43: Section 15 / Page 74** End Seal Kit Location and Heat Trace Cable Installation.
   - The heat trace cable on the vertical tube should be completely wrapped with aluminum tape. (Note: The nylon reinforced aluminum tape serves two purposes, it holds the heat trace cable in place while installing the heat trace cable on the vertical tube, and it insures the heat trace cable is held firmly in contact with the vertical tube).

6. The installation is now complete.
   - See **Figure 44: Section 15 / Page 75**. Installed Electrical Junction Box with Electrical Connections.

7. Check all electrical connections for loose wires.

8. Remove the lock(s) and tags from the lockout & tagout.

9. Turn on power to the Heat Trace Cable and vacuum pump.

10. After work is completed, put the TLS-350 in the **AUTOMATIC** mode.
    - **See Figure 11: Section 15 / Page 32 for instructions.**

Figure 33: Termination block inside the electrical junction box

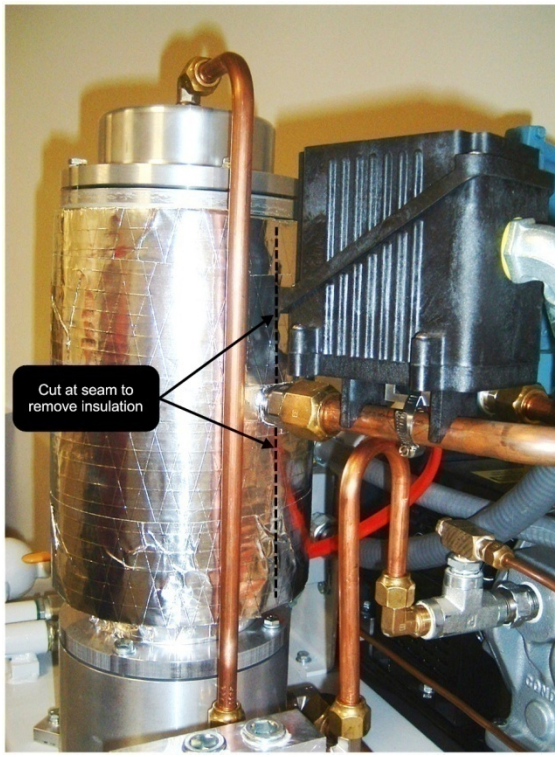

Figure 34: Seam to cut to remove the insulation

Figure 35: End seal kit components

Connection screws
End cap
Grommet
Pressure plate
Heat trace cable

10.4.1 End Seal Kit Installation Instructions

Chromalox®

Installation Instructions

SERVICE REFERENCE		
DIVISION 4	SECTION RT	
SALES REFERENCE	(Supersedes PJ450-9)	PJ450-10
		161-562761-001
DATE	MARCH, 2004	

Type RTES End Seal Kit for Self-Regulating and Constant Wattage Rapid-Trace Heating Cable

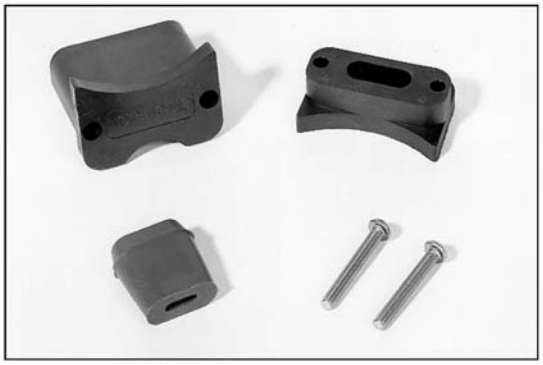

RTES Kit Parts:
1 - End Cap
2 - Screws
1 - Pressure Plate
1 - Grommet

GENERAL

The RTES kit is used for terminating braided (-C) and overcoated (-CR or -CT) versions of Self-Regulating and Fluoropolymer insulated Constant Wattage Rapid-Trace Heating Cable. The cable grommet is furnished with this kit such that the kit suffix number is the same as the grommet number (eg., an RTES-3 kit uses a GR3 grommet). Refer to the list below to insure you have the proper grommet for the cable you are installing.

GR1 for SRL-C
GR2 for SRL-CR or SRL-CT
GR3 for CWM-C
GR4 for CWM-CT
GR5 for SRL-MC
GR6 for SRL-MCR or SRL-MCT
GR7 for SRM/E-C
GR8 for SRM/E-CT

Each kit contains enough material to make one termination. Materials required include: standard electrical cutters, screwdriver and fiberglass tape.

INSTALLATION

⚠WARNING

ELECTRIC SHOCK HAZARD. Disconnect all power before installing or servicing heating cable and accessories. A qualified person must perform installation and service of heating cable and accessories. Heating cable must be effectively grounded in accordance with the National Electrical Code. Failure to comply can result in personal injury or property damage.

Note: All electrical wiring, including GFCI (Ground Fault Circuit Interrupters), must be done in accordance with the National Electrical Code and local codes by a qualified person.

Note: These instructions are for all Self-Regulating and Constant Wattage heating cables in ordinary locations. Consult factory for installation of braided cable in hazardous locations. Not all instructions, are for all cables. Each step has a boldface heading stating what type of cable that instruction is for.

1. **FOR CONSTANT WATTAGE CABLE:**
   Using standard electrical cutters, make a perpendicular cut across the cable four inches from the last module point.

Note: Cutting the cable between module points (indentions in cable) creates a non-heated cold lead. See Figure 1.

Figure 1

© 2004 Chromalox, Inc.

Figure 36: End seal kit installation instructions, page 1 of 2

INSTALLATION

2. FOR CABLE WITH EXPOSED METAL BRAID (-C):
Push the braid back three inches to expose the base cable insulation. See Figure 2.

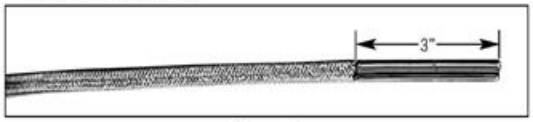

Figure 2

3. FOR ALL CABLE:
Slide the pressure plate and grommet over the end of the cable. **Note:** The pressure plate and end cap have different size curved surfaces on the top and bottom of each piece. These curved surfaces are designed to give a better fit on process equipment. The side with the smaller radius curve is for use on pipes with diameters up to three inches or on flat surfaces. The other side is for use on pipes with diameters of three inches or more. See Figure 3 and Figure 8.

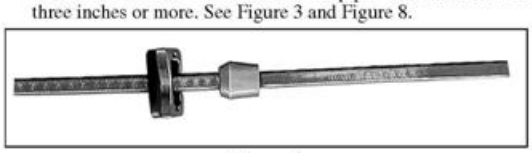

Figure 3

4. FOR OVERCOATED CABLES (-CR or -CT):
Score the outer jacket one inch from the end of the cable. Remove the jacket to expose the braid. Unravel and trim the braid flush with the outer jacket. Pull any strands of braid back towards the outer jacket. See Figure 4.

Figure 4

5. FOR ALL CABLE:
Using standard electrical cutters, cut a "VEE" notch between the buss wires. See Figure 5.

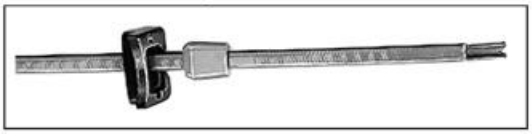

Figure 5

6. FOR ALL CABLE:
Slide the pressure plate and grommet towards the end of the cable leaving 5/8" of the cable extending past the end of the grommet. See Figure 6.

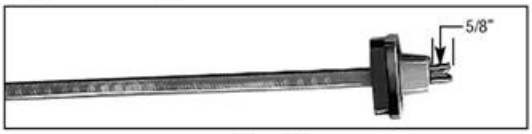

Figure 6

7. FOR ALL CABLE:
Slide the end cap over the grommet. Using a screwdriver, connect the pressure plate to the end cap. See Figure 7.

Figure 7

8. FOR ALL CABLE:
Using a fastening device, fiber re-inforced electrical tape (Chromalox FT-1 or equal), secure the assembly to the pipe. Wrap the tape around the assembly between the legs. See Figure 8.

Figure 8

WARRANTY AND LIMITATION OF REMEDY AND LIABILITY

Chromalox warrants only that the Products and parts manufactured by Chromalox, when shipped, and the work performed by Chromalox when performed, will meet all applicable specification and other specific product and work requirements (including those of performance), if any, and will be free from defects in material and workmanship under normal conditions of use. All claims for defective or nonconforming (both hereinafter called defective) Products, parts or work under this warranty must be made in writing immediately upon discovery, and in any event, within one (1) year from delivery, provided, however all claims for defective Products and parts must be made in writing no later than eighteen (18) months after shipment by Chromalox. Defective and nonconforming items must be held for Chromalox's inspections and returned to the original f.o.b. point upon request. THE FOREGOING IS EXPRESSLY IN LIEU OF ALL OTHER WARRANTIES WHATSOEVER, EXPRESS, IMPLIED AND STATUTORY, INCLUDING, WITHOUT LIMITATION, THE IMPLIED WARRANTIES OF MERCHANTABILITY AND FITNESS FOR A PARTICULAR PURPOSE.

Notwithstanding the provisions of this WARRANTY AND LIMITATION Clause, it is specifically understood that Products and parts not manufactured and work not performed by Chromalox are warranted only to the extent and in the manner that the same are warranted to Chromalox by Chromalox's vendors, and then only to the extent that Chromalox is reasonably able to enforce such warranty, it being understood Chromalox shall have no obligation to initiate litigation unless Buyer undertakes to pay all cost and expenses therefor, including but not limited to attorney's fees, and indemnifies Chromalox against any liability to Chromalox's vendors arising out of such litigation.

Upon Buyer's submission of a claim as provided above and its substantiation, Chromalox shall at its option either (i) repair or replace its Products, parts or work at the original f.o.b. point of delivery or (ii) refund an equitable portion of the purchase price.

THE FOREGOING IS CHROMALOX'S ONLY OBLIGATION AND BUYER'S EXCLUSIVE REMEDY FOR BREACH OF WARRANTY, AND IS BUYER'S EXCLUSIVE REMEDY AGAINST CHROMALOX FOR ALL CLAIMS ARISING HEREUNDER OR RELATING HERETO WHETHER SUCH CLAIMS ARE BASED ON BREACH OF CONTRACT, TORT (INCLUDING NEGLIGENCE AND STRICT LIABILITY) OR OTHER THEORIES, BUYER'S FAILURE TO SUBMIT A CLAIM AS PROVIDED ABOVE SHALL SPECIFICALLY WAIVE ALL CLAIMS FOR DAMAGES OR OTHER RELIEF, INCLUDING BUT NOT LIMITED TO CLAIMS BASED ON LATENT DEFECTS. IN NO EVENT SHALL BUYER BE ENTITLED TO INCIDENTAL OR CONSEQUENTIAL DAMAGES AND BUYER SHALL HOLD CHROMALOX HARMLESS THEREFROM. ANY ACTION BY BUYER ARISING HEREUNDER OR RELATING HERETO, WHETHER BASED ON BREACH OF CONTRACT, TORT (INCLUDING NEGLIGENCE AND STRICT LIABILITY) OR OTHER THEORIES, MUST BE COMMENCED WITHIN ONE (1) YEAR AFTER THE DATE OF SHIPMENT OR IT SHALL BE BARRED.

W2008M

Chromalox®
PRECISION HEAT AND CONTROL
1382 HEIL QUAKER BLVD., LAVERGNE, TN 37086
Phone: (615) 793-3900 www.chromalox.com

98 - 068
TA - Q4 - EF
Litho in U.S.A.

Figure 37: End seal kit installation instructions, page 2 of 2

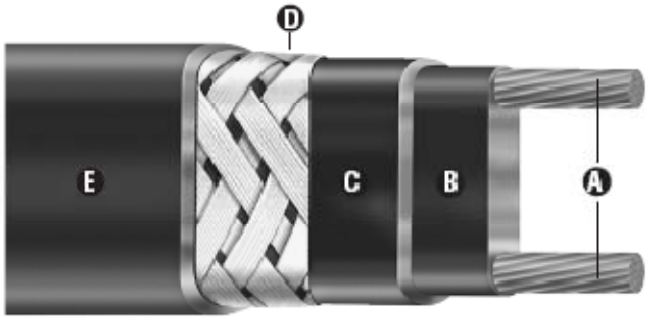

A. Twin 14 AWG copper buss wires
B. Semi-conductive polymer core
C. High temp. fluoropolymer jacket
D. Metallic braid ground
E. High temperature fluoropolymer jacket

Figure 38: Prepare the new heat trace cable for installation into the end seal kit

Chromalox®

Installation Instructions

SERVICE REFERENCE		
DIVISION 4	SECTION RT	
SALES REFERENCE	(Supersedes PJ451-9)	PJ451-10
		161-562762-001
DATE	MARCH, 2004	

RTPC Power Connection Kit for Self-Regulating and Constant Wattage Rapid-Trace Heating Cable

RTPC Power Connection Kit Parts:

1 - Molded Junction Box consisting of: Base - Box - Lid - Hardware
1 - Three Position Terminal Block
1 - Mounting Screw for Terminal Block
1 - Cable Grommet
1 - Cover Gasket

GENERAL

⚠WARNING

ELECTRIC SHOCK HAZARD. Disconnect all power before installing or servicing heating cable and accessories. A qualified person must perform installation and service of heating cable and accessories. Heating cable must be effectively grounded in accordance with the National Electrical Code. Failure to comply can result in personal injury or property damage.

NOTE: All electrical wiring, including GFCI (Ground Fault Circuit Interrupters), must be done according to National Electrical or local codes by a qualified person.

The RTPC Kit is used to connect base, braided (-C) and over-coated (-CR or -CT) versions of Self-Regulating and Fluoropolymer insulated Constant Wattage Rapid-Trace Heating Cables to power. The cable grommet is furnished with this kit, such that the kit suffix number is the same as the grommet number (eg., an RTPC-3 kit uses a GR3 grommet). Refer to the list below to insure you have the proper grommet for the cable you are installing.

GR1 for SRL-C	GR2 for SRL-CR or SRL-CT
GR3 for CWM-C	GR4 for CWM-CT
GR5 for SRL-MC	GR6 for SRL-MCR or SRL-MCT
GR7 for SRM/E-C	GR8 for SRM/E-CT

Each kit contains enough material to make one power connection point. It is possible to connect up to three Self-Regulating or two Constant Wattage Cables in the same box. (One grommet required for each cable.)

Materials required for installation include: standard electrical cutters, screwdriver, sharp utility knife and a pipe strap (Chromalox PS or equal).

Wipe inside lip of cover with a clean cloth. Remove protective backing from the gasket and affix it to the cover lip. Press firmly all around for proper adhesion.

© 2004 Chromalox, Inc.

Figure 39: Electrical junction box installation instructions, page 1 of 4

INSTALLATION

NOTE: These instructions are for all Self-Regulating and Constant Wattage heating cables in ordinary locations. Consult factory for installation of braided cable in hazardous locations. Not all instructions are for all cables. Each step of the instructions will have a heading in boldface stating what type of cable each instruction is intended for.

1. **FOR CONSTANT WATTAGE CABLES:**
   Cut the cable 12 inches past the last module point (indentation in cable). **NOTE:** Cutting the cable between module points creates a non-heating cold lead. See Figure 1.

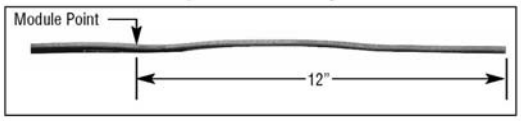

Figure 1

2. **FOR CABLE WITH EXPOSED METAL BRAID (-C):**
   Push the braid back 12 inches on the cable. See Figure 2.

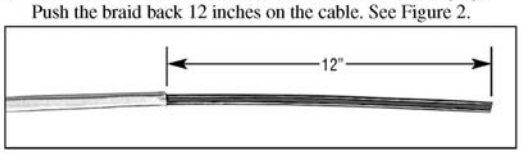

Figure 2

3. **FOR ALL CABLES:**
   Feed the ends of the cables through the appropriate hole in the base. Allow eight (8) inches of cable to extend above the top of the base. See Figure 3.

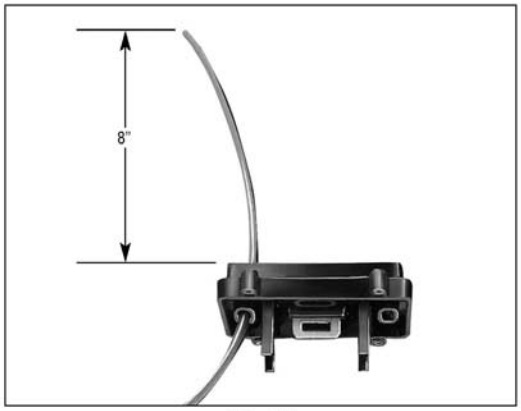

Figure 3

4. **FOR ALL CABLES:**
   Slide cable grommet over the end of the cable and insert it into the opening in the base. Secure the base to the pipe by threading the appropriate sized pipestrap through the slot in the mounting plate. Tighten the pipestrap until the base is securely attached to the pipe. See Figure 4.

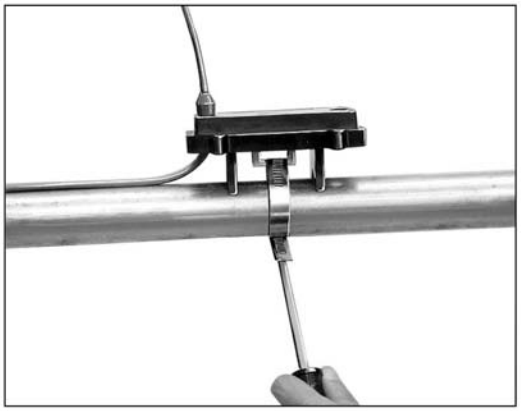

Figure 4

5. **FOR OVERCOATED CABLES (-CR or -CT):**
   Score the outer insulation seven (7) inches from the end of cable. Remove the jacket to expose the metal braid. See Figure 5. **CAUTION:** ***When removing the outer jacket, be careful not to damage the braid or the base cable insulation.***

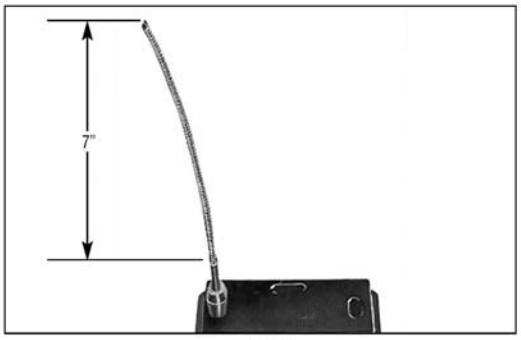

Figure 5

6. **FOR ALL CABLES:**
   Punch out the knockouts on the bottom of the box which correspond to the openings in the base through which the heating cable passes. Be careful to punch out only those knockouts to be used. If one is mistakenly punched, blank grommets can be ordered to re-establish the water tight seal. See Figure 6.

Figure 6

Figure 40: Electrical junction box installation instructions, page 2 of 4

INSTALLATION

7. FOR ALL CABLES:
Feed the cables through the corresponding holes in the box. Secure box to base using all four (8-32) screws. See Figure 7.

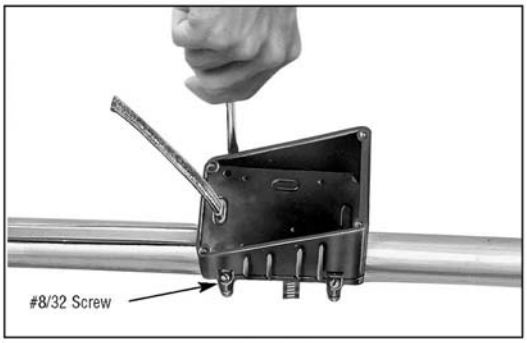

Figure 7

8. FOR OVERCOATED CABLES:
Starting from the end of the cable, unravel 2-1/2 inches of the braid. Twist the strands together to form a pigtail. See Figure 8.

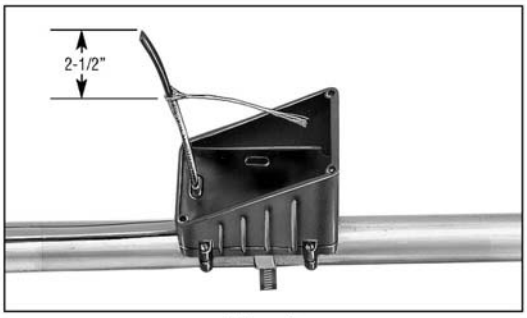

Figure 8

9. FOR SELF-REGULATING CABLES:
Using standard electrical cutters, cut a 3/4 inch long notch out of the cable between the conductor wires. Bare a 3/8 inch length of each conductor by stripping off the outside insulation and the inner black core material. See Figure 9.

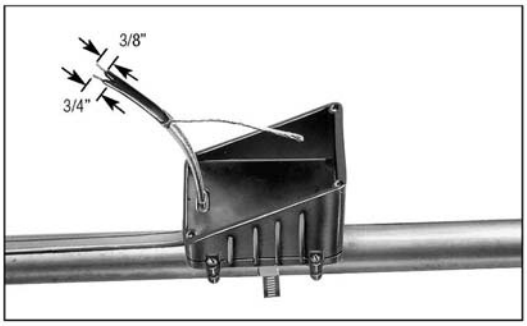

Figure 9

10. FOR CONSTANT WATTAGE CABLES:
Score the outer jacket 3/4 inch from the end of the cable and remove the jacket. Cut off the exposed nichrome wire, pushing any remainder back under the jacket. These cables have an inner layer of insulation which is also to be removed as described above. Separate the buss wires and strip off the last 3/8 inch of insulation from both buss wires. See Figure 10.

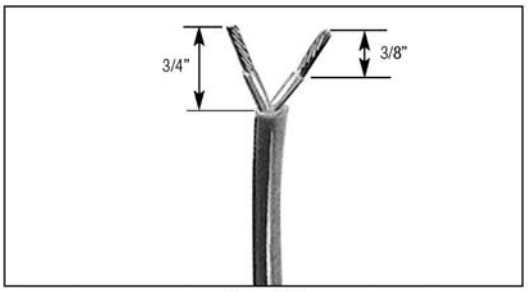

Figure 10

11. FOR ALL CABLES:
Insert the bared ends of the conductors into the openings in the terminal block. Tighten screws firmly to hold conductors in place. See Figure 11.

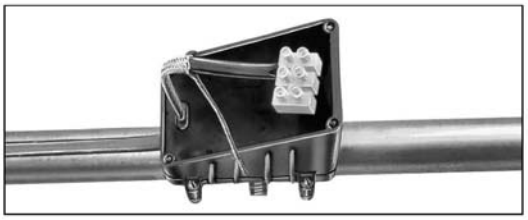

Figure 11

12. FOR OVERCOATED CABLES (-CR or -CT):
Insert the end of the braid pigtail into the remaining opening in the terminal block. Tighten screw firmly to hold the braid in place. See Figure 12.

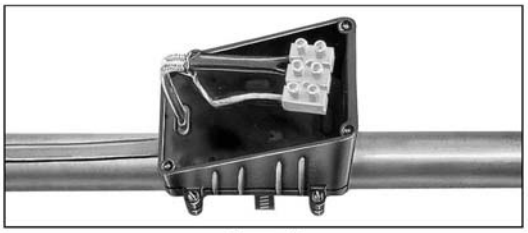

Figure 12

13. FOR ALL CABLES:
Connect conduit hub (Chromalox CCH or equal) to the box. Attach conduit to hub and bring power leads into box. See Figure 13.

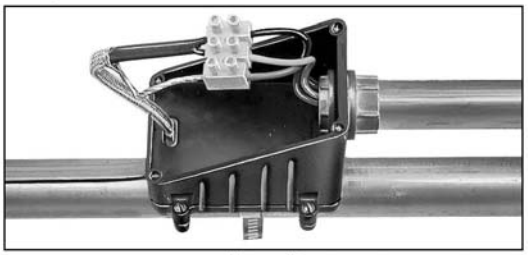

Figure 13

Figure 41: Electrical junction box installation instructions, page 3 of 4

INSTALLATION

14. FOR ALL CABLES:
Strip 3/8 inch length of each conductor of the power cord. Insert the bared ends of the conductors into the corresponding openings on the unused side of the terminal block. Remember, the green (ground) wire must be opposite of the opening of the terminal block which is either empty or contains the metal braid. See Figure 14.

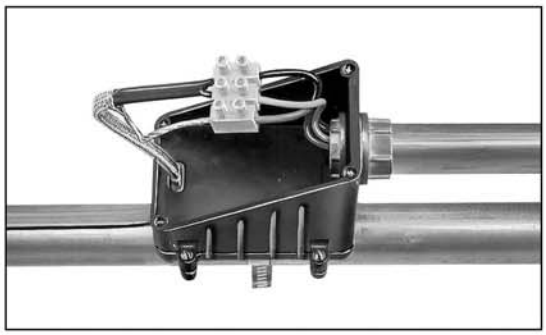

Figure 14

15. FOR ALL CABLES:
Mount terminal block to bottom of the box by driving the 6/32 self-tapping screw into the mounting hole as shown. See Figure 15.

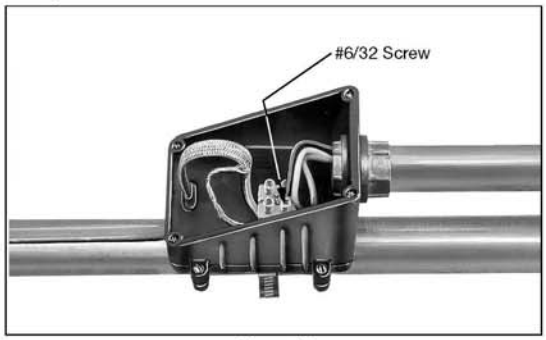

Figure 15

16. FOR ALL CABLES:
Carefully push the wires into the box. Secure the lid to box. See Figure 16.

Figure 16

17. FOR CABLE WITH EXPOSED METAL BRAID (-C):
Unravel four (4) inches of braid from the cable and twist into a pigtail.

⚠WARNING

ELECTRIC SHOCK HAZARD. The twisted braid must be effectively grounded in accordance with the National Electrical Code to eliminate electric shock hazard.

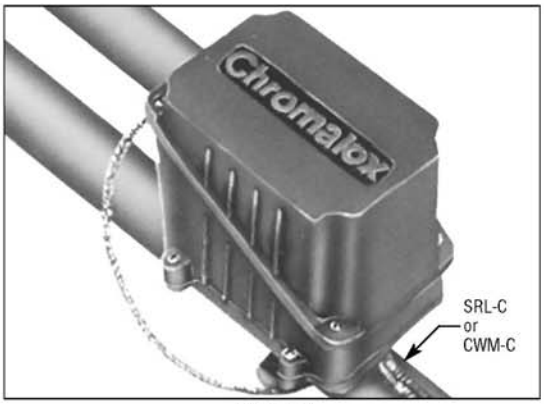

Figure 17

WARRANTY AND LIMITATION OF REMEDY AND LIABILITY

Chromalox warrants only that the Products and parts manufactured by Chromalox, when shipped, and the work performed by Chromalox when performed, will meet all applicable specification and other specific product and work requirements (including those of performance), if any, and will be free from defects in material and workmanship under normal conditions of use. All claims for defective or nonconforming (both hereinafter called defective) Products, parts or work under this warranty must be made in writing immediately upon discovery, and in any event, within one (1) year from delivery, provided, however all claims for defective Products and parts must be made in writing no later than eighteen (18) months after shipment by Chromalox. Defective and nonconforming items must be held for Chromalox's inspections and returned to the original f.o.b. point upon request. THE FOREGOING IS EXPRESSLY IN LIEU OF ALL OTHER WARRANTIES WHATSOEVER, EXPRESS, IMPLIED AND STATUTORY, INCLUDING, WITHOUT LIMITATION, THE IMPLIED WARRANTIES OF MERCHANTABILITY AND FITNESS FOR A PARTICULAR PURPOSE.

Notwithstanding the provisions of this WARRANTY AND LIMITATION Clause, it is specifically understood that Products and parts not manufactured and work not performed by Chromalox are warranted only to the extent and in the manner that the same are warranted to Chromalox by Chromalox's vendors, and then only to the extent that Chromalox is reasonably able to enforce such warranty, it being understood Chromalox shall have no obligation to initiate litigation unless Buyer undertakes to pay all cost and expenses therefor, including but not limited to attorney's fees, and indemnifies Chromalox against any liability to Chromalox's vendors arising out of such litigation.

Upon Buyer's submission of a claim as provided above and its substantiation, Chromalox shall at its option either (i) repair or replace its Products, parts or work at the original f.o.b. point of delivery or (ii) refund an equitable portion of the purchase price.

THE FOREGOING IS CHROMALOX'S ONLY OBLIGATION AND BUYER'S EXCLUSIVE REMEDY FOR BREACH OF WARRANTY, AND IS BUYER'S EXCLUSIVE REMEDY AGAINST CHROMALOX FOR ALL CLAIMS ARISING HEREUNDER OR RELATING HERETO WHETHER SUCH CLAIMS ARE BASED ON BREACH OF CONTRACT, TORT (INCLUDING NEGLIGENCE AND STRICT LIABILITY) OR OTHER THEORIES. BUYER'S FAILURE TO SUBMIT A CLAIM AS PROVIDED ABOVE SHALL SPECIFICALLY WAIVE ALL CLAIMS FOR DAMAGES OR OTHER RELIEF, INCLUDING BUT NOT LIMITED TO CLAIMS BASED ON LATENT DEFECTS. IN NO EVENT SHALL BUYER BE ENTITLED TO INCIDENTAL OR CONSEQUENTIAL DAMAGES AND BUYER SHALL HOLD CHROMALOX HARMLESS THEREFROM. ANY ACTION BY BUYER ARISING HEREUNDER OR RELATING HERETO, WHETHER BASED ON BREACH OF CONTRACT, TORT (INCLUDING NEGLIGENCE AND STRICT LIABILITY) OR OTHER THEORIES, MUST BE COMMENCED WITHIN ONE (1) YEAR AFTER THE DATE OF SHIPMENT OR IT SHALL BE BARRED.

W2008M

Chromalox®
PRECISION HEAT AND CONTROL
1382 HEIL QUAKER BLVD., LAVERGNE, TN 37086
Phone: (615) 793-3900 www.chromalox.com

98 - 025
TA - Q4 - EF
Litho in U.S.A.

Figure 42: Electrical junction box installation instructions, page 4 of 4

Figure 43: End seal kit location and heat trace cable installation

Figure 44: Installed Electrical Junction Box with Electrical Connections

11 Hydrocarbon Infrared (HC IR) Sensor Module Replacement

Figure 45: HC IR Sensor Module and Electrical Housing Assembly

11.1 Safety

Use lockout / tagout procedures prior to starting work.

11.2 Removing HC IR Sensor from the HC IR Sensor Module Electrical Housing

1. Prior to starting work, put the TLS-350 in the Manual "**OFF**" mode.
   - **See Figure 11: Section 15 / Page 32 for instructions.**
2. Disconnect power to the heat trace cable, the vacuum pump, and the blower.

3. Disconnect and completely remove the ¼" 45° flare tubing from the top and bottom sides of the HC IR Sensor Module. **See Figure 46: Section 15 / Page 77**.

   NOTE: The nuts on the tubing are ¼" 45° flare. Use caution to avoid damaging the flared ends on the tubing or the threads on the nuts after removal.

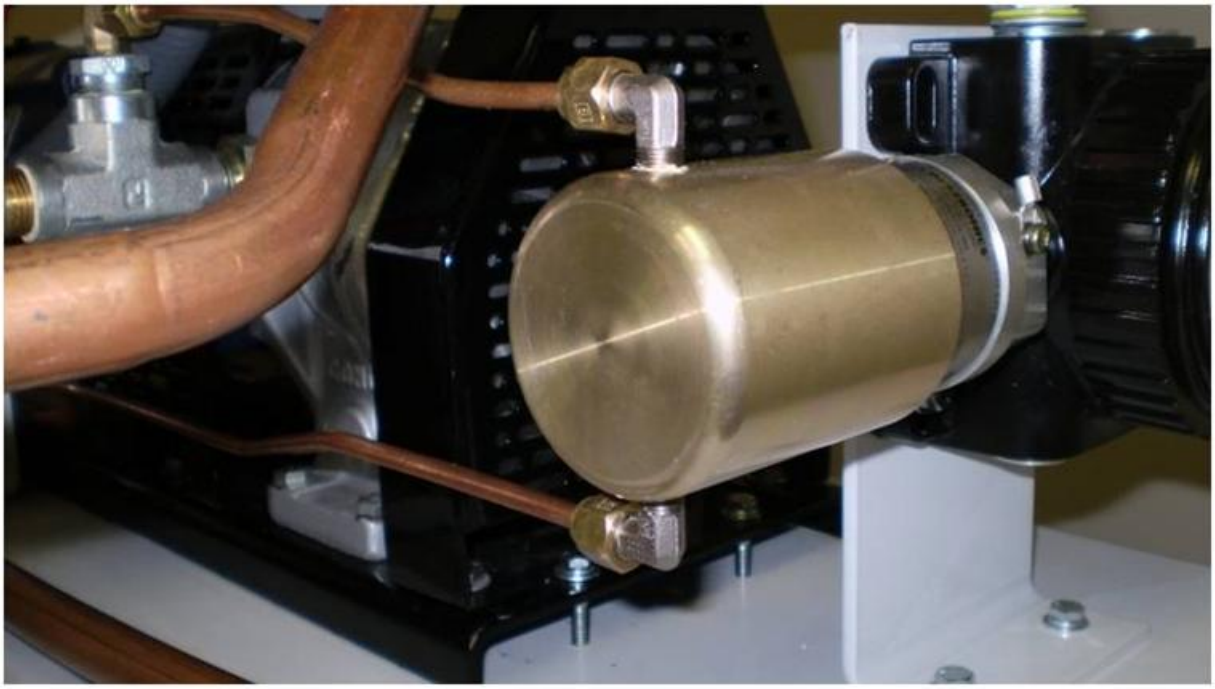

Figure 46: HC IR Sensor Module 1/4" 45-degree Tubing and Fittings

4. Remove the cover on the electrical house and keep for re-use.
   NOTE: Do not remove the HC sensor electrical housing.

5. Disconnect the following HC IR sensor wires from the electrical housing circuit board:
   - White: 4-20 mA signal sire
   - Black: -(common) RET wire
   - Red: +24VDC power wire
     NOTE: The yellow and green wires are not used in this application.
   - **See Figures 47 and 48: Section 15 / Page 78**.

6. Unscrew and remove the HC IR Sensor Module from the electrical housing.
   - Package the used HC IR Sensor Module in the anti-static bag and box that came with the new / recalibrated HC IR Sensor Module unit.
   - The used HC IR Sensor Module can be sent back to VST for re-calibration.

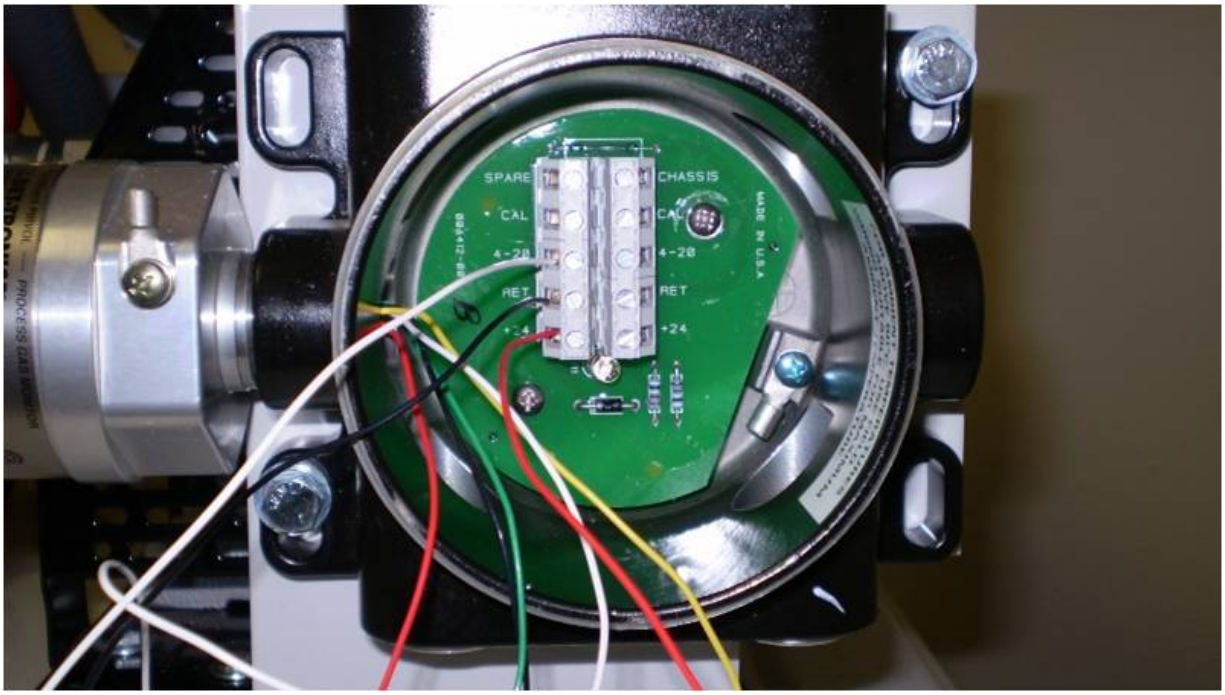

Figure 47: HC IR Sensor Electrical Housing Circuit Board

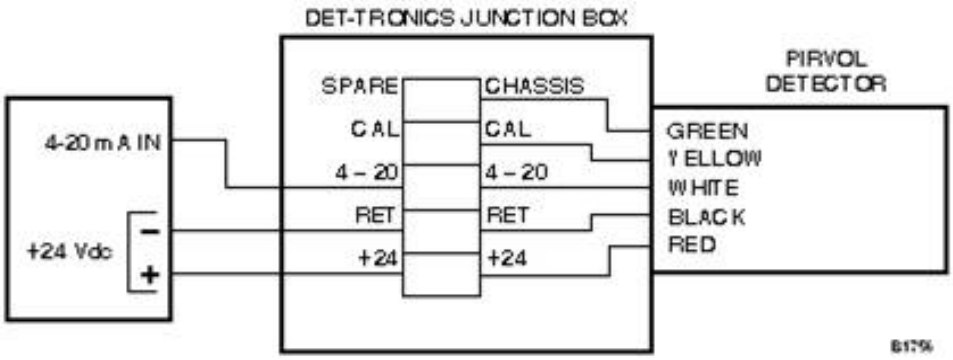

Figure 48: HC IR Sensor Electrical Housing Circuit Board Wiring Diagram

11.3 Installing a New or Re-calibrated HC IR Sensor Module to the HC IR Sensor Module Electrical Housing

1. Use only silicon grease (not hydrocarbon-based grease) to lubricate the HC IR sensor threads prior to installation.
   - Hydrocarbon-based grease or lubricant will emit hydrocarbon vapors, which will be measured by the HC sensor and will cause inaccurate gas-level readings.

2. Screw the new / re-calibrated HC IR sensor module to the electrical housing.
   - Remove the aluminum cover from the HC IR sensor.
   - While screwing on the sensor, orient the optics in the vertical position.
   - **See Figure 49: Section 15 / Page 79**.

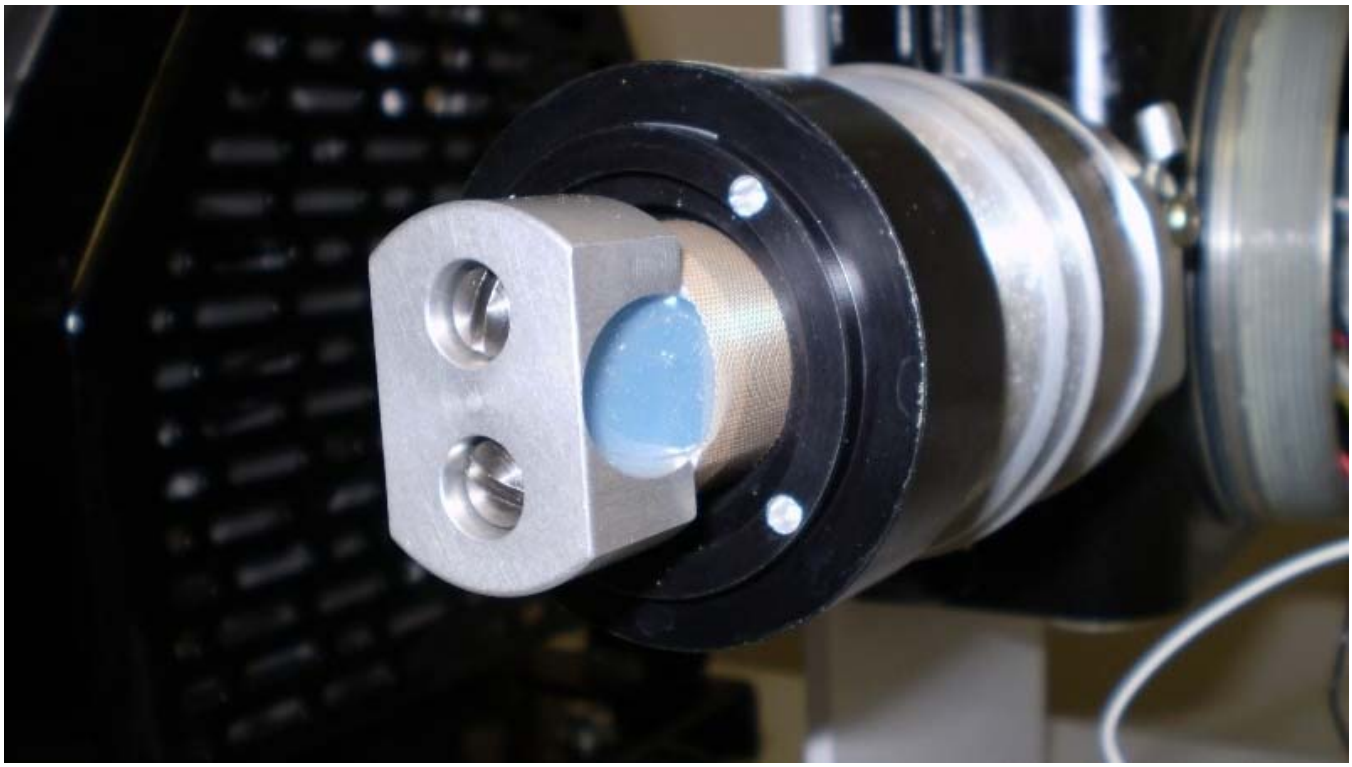

Figure 49: HC IR sensor installation orientation

3. Replace the aluminum cover on the HC IR sensor.

4. Connect the following HC IR sensor wires to the electrical housing circuit board:
   - White: 4-20 mA signal sire
   - Black: -(common) RET wire
   - Red: +24VDC power wire
     NOTE: the yellow and green wires are not used in this application.
   - See **Figures 47 and 48: Section 15 / Page 78**.

5. Install the cover on the electrical housing.
   - Use only silicon grease (not hydrocarbon-based grease) to lubricate the cover threads prior to installation.
   - Hydrocarbon-based grease or lubricant will emit hydrocarbon vapors, which will be measured by the HC sensor and will cause inaccurate gas-level readings.

6. Re-install the (2) ¼" 45° flare tubing on the top and bottom sides of the HC IR sensor module.
   - **NOTE: When tightening the 45° flare nuts, clamp the tube flare between the nut and the nose body of the tube by screwing the nut on finger-tight. Tighten with a wrench an additional ¼-turn for a metal-to-metal seal.**

7. Remove the lock(s) and tags from the lockout/tagout.

8. Turn **ON** power to the heat trace, blower, and vacuum pump.

9. Return the TLS-350 to the manual **ON** mode.

10. Perform a *Processor* Leak Test.
    - **See Section 15 / Page 33 for instructions.**

11. After the installation is complete, put the TLS-350 in the **AUTOMATIC ON** mode.
    - **See Figure 11: Section 15 / Page 32 for instructions.**

12 Forms

- The following pages contain forms for:
    - Scheduled preventative maintenance list
    - Scheduled preventative maintenance checklist

12.1 Preventative Maintenance

Preventative Maintenance			
ASC #:		Date:	
ASC Name:			
ASC Certification Level:			
ASC Company:			
GDF Name:			
Address:			
City:		State:	ZIP Code:
GDF Contact Person Name:			
GDF Contact Person Title:			
GDF Contact Person Phone:			
GDF Contact Person E-mail:			
Notes			
Use the form on the following page to note details of Preventative Maintenance activities.			

12.2 Preventative Maintenance Checklist Form

Component	Frequency	Date Inspected	Completed	Required Action
PROCESSOR	**Yearly**			
Inspect drive coupling on vacuum pump			[]	
Check temperature of membrane housing			[]	
RECIRCULATION BLOWER				
Replace every 10 years or every 15,000 hours, whichever comes first.			[]	
VACUUM PUMP				
Replace every 10 years or every 15,000 hours, whichever comes first.			[]	