# Operation, Maintenance & Set-Up Manual

## ECS Membrane Processor: PMC and ISD

Part: VST ECS-CS3-310 – Three Phase
VST-ECS-CS3-110 – Single Phase

Executive Orders: VR-203
VR-204

Version: 1.0 (g)

*Vapor Systems Technologies, Inc.*
650 Pleasant Valley Drive
Springboro, Ohio 45066
937-704-9333 PH
937-704-9443 FX
www.vsthose.com

# Table of Contents

Table of Figures ..... 5
About VST ..... 7
Notice ..... 7
Warranty ..... 8
Warranty Cards ..... 9
Components and Warranties ..... 10
Activating the Processor Warranty ..... 11
VST Contractor Requirements ..... 12
Veeder-Root Contractor Requirements ..... 13
Safety Icons ..... 14
Table of Terms & Abbreviations ..... 15
1 ECS Membrane Processor Overview ..... 16
1.1 ECS Membrane Processor Theory of Operation ..... 16
1.2 Overview of How the Processor Operates ..... 17
1.3 Processor Dimensions and Weight ..... 17
1.4 Processor Components and Their Purpose ..... 18
1.5 Processor Auxiliary Components ..... 20
1.6 Processor Manuals ..... 20
2 *Processor* Operation ..... 26
2.1 TLS 350 Construction ..... 26
2.2 Automatic Control ..... 27
2.3 Manual Control of the Processor ..... 28
2.4 TLS Alarms ..... 29
2.5 Thresholds and Algorithms ..... 29
2.5.1 TLS-350 (PMC): Alarm Troubleshooting Summary ..... 32
2.5.2 TLS-350 (ISD): Alarm Troubleshooting Summary ..... 33
3 Post-Installation Power-Up Tests ..... 35
3.1 Post-Installation Electrical Connections ..... 35
3.2 Required Post-Installation Power-Up Tests ..... 37
3.3 TLS Manual Mode ..... 39
3.4 Electrical Connection Test ..... 41
3.5 Motor-Rotation Test ..... 41
3.6 Heat-Trace Continuity Test ..... 47
3.6.1 Preparing the heat trace electrical junction box for the test: ..... 47

3.6.2 Testing the heat trace circuit ..... 47
3.7 HC Sensor and HC Sentry Power Test ..... 48
3.7.1 Checking 24 VDC Power to the HC Sensor ..... 48
3.7.2 Checking 24VDC Power to the HC Sentry Module ..... 49
3.8 Processor Leak Test ..... 50
3.8.1 Tools needed to conduct the Processor Leak Test: ..... 50
3.8.2 Conducting the Leak Test ..... 51
3.9 Preparing the Processor for Field Operation ..... 52
3.9.1 Setting the TLS-350 Threshold Values ..... 52
3.9.2 Processor Configuration Prior to Start Up ..... 52
3.10 Post-Installation Power-Up Checklist ..... 53
4 Processor Start-Up ..... 54
4.1 Processor Shut-Down Procedure ..... 55
4.1.1 Processor Shut-Down Procedure ..... 55
4.1.2 HC Sensor and HC Sentry Module ..... 55
4.1.3 Heat-Trace Cable ..... 55
5 Processor Maintenance ..... 56
5.1 Annual System Compliance Testing ..... 57
5.2 Annual Inspections and Replacements ..... 58
5.3 Preventative Maintenance Checklist Form ..... 59
5.4 GDF Maintenance Record ..... 60
6 Blower Replacement ..... 61
6.1 Blower Replacement Safety ..... 61
6.2 Removing the Blower ..... 61
6.3 Installing the New Blower ..... 62
7 Vacuum Pump Replacement ..... 64
7.1 Safety ..... 64
7.2 Removing the Vacuum Pump ..... 64
7.3 Installing the new Vacuum Pump and Vacuum Pump Motor Assembly ..... 65
8 Membrane Replacement ..... 68
8.1 Safety ..... 68
8.2 Removing the Membrane from the Membrane Housing ..... 68
8.3 Installing the New Membrane ..... 70
9 Drive Coupling Rubber Insert Replacement ..... 71
9.1 Safety ..... 71
9.2 Removing the Drive Coupling Insert ..... 71
9.3 Installing the Drive Coupling Insert ..... 72
10 Heat Trace Cable Replacement ..... 74
10.1 Safety ..... 74
10.2 Removing the Heat Trace Electrical Box ..... 74

10.3 Overview for Installing the New Heat Trace Cable ....75
10.4 Steps for Installing the New Heat Trace Cable ....75
11 Hydrocarbon Infrared (HC IR) Sensor Module Replacement ....86
11.1 Safety ....86
11.2 Removing HC IR Sensor from the HC IR Sensor Module Electrical Housing ....87
11.3 Installing a New or Re-calibrated HC IR Sensor Module to the HC IR Sensor Module Electrical Housing ....89
12 Forms ....91
12.1 Preventative Maintenance ....92
12.2 Preventative Maintenance Checklist Form ....93

# Table of Figures

Figure 1: VST Registration Card ..... 9
Figure 2: ECS Membrane Processor Sticker ..... 9
Figure 3: How the Processor fits into the GDF layout ..... 21
Figure 4: Processor Piping Diagram ..... 22
Figure 5: ECS Vent Configurations ..... 23
Figure 6: Processor Isometric Drawing (1 of 2) ..... 24
Figure 7: Processor Isometric Drawing (2 of 2) ..... 25
Figure 8: TLS 350 Face ..... 26
Figure 9: Processor Run-Time Algorithm ..... 31
Figure 10: Wiring the Motor Starter Relay Coil ..... 36
Figure 11: ECS Piping Configuration ..... 38
Figure 12: PMC Diagnostic Menu with PMC Software ..... 39
Figure 13: PMC Diagnostic with ISD Software ..... 40
Figure 14: Vacuum Pump: Single-Phase Motor Wiring Diagram ..... 43
Figure 15: Vacuum Pump: Three-Phase Motor Wiring Diagram ..... 44
Figure 16: Blower: Single-Phase Motor Wiring Diagram ..... 45
Figure 17: Blower: Three-Phase Motor Wiring Diagram ..... 46
Figure 19: HC Sentry Interface Module Front View: Power and ON/OFF Switch ..... 48
Figure 20: HC Sentry Interface Module Back View: Power "ON" Light ..... 49
Figure 21: Typical Leak Check Test Fixture ..... 50
Figure 22: Blower electrical connection conduit ..... 63
Figure 23: Blower inlet and outlet tubing connections and mounting bolts ..... 63
Figure 24: Vacuum pump outlet tubing connection ..... 66
Figure 25: Vacuum pump inlet tubing and fittings ..... 66
Figure 26: Vacuum pump electrical connection / vacuum pump outlet tubing / HC sensor inlet tubing ..... 67
Figure 27: Air outlet / vacuum pump outlet / HC sensor inlet tubing ..... 67
Figure 28: Membrane Housing ..... 68
Figure 29: Exposed membrane with top plate removed. ..... 68
Figure 30: Membrane extraction tool ..... 69
Figure 31: Membrane base insert ..... 69
Figure 32: Vacuum pump with guard removed ..... 71
Figure 33: Vacuum and motor assembly ..... 71
Figure 34: Vacuum pump unbolted and moved away from the motor ..... 72
Figure 35: Drive coupling rubber insert ..... 73
Figure 36: Termination block inside the electrical junction box ..... 76
Figure 37: Seam to cut to remove the insulation ..... 76
Figure 38: End seal kit components ..... 76
Figure 39: End seal kit installation instructions, page 1 of 2 ..... 77

Figure 40: End seal kit installation instructions, page 2 of 2 ..... 78
Figure 41: Prepare the new heat trace cable for installation into the end seal kit ..... 79
Figure 42: Electrical junction box installation instructions, page 1 of 4 ..... 80
Figure 43: Electrical junction box installation instructions, page 2 of 4 ..... 81
Figure 44: Electrical junction box installation instructions, page 3 of 4 ..... 82
Figure 45: Electrical junction box installation instructions, page 4 of 4 ..... 83
Figure 46: End seal kit location and heat trace cable installation ..... 84
Figure 47: Installed electrical junction box with electrical connections ..... 85
Figure 48: HC IR Sensor Module and Electrical Housing Assembly ..... 86
Figure 49: HC IR Sensor Module 1/4" 45º tubing and fittings ..... 87
Figure 50: HC IR Sensor Electrical Housing Circuit Board ..... 88
Figure 51: HC IR Sensor Electrical Housing Circuit Board Wiring Diagram ..... 88
Figure 52: HC IR sensor installation orientation ..... 89

# *About VST*

Vapor Systems Technologies, Inc. began in 1989 with the vision of One Company – One Integrated Solution.

Today, that philosophy is still in place and getting stronger. Recognizing that a healthier environment is a need and not an option, VST has dedicated its undivided attention to the ever-changing, stringent regulations that govern fugitive vapors at gasoline dispensing facilities (GDF). To this challenge, VST is committed to a continual R&D campaign of developing the most current, technologically advanced solutions to service not only the United States, but also the world.

VST specializes in the development, engineering, and manufacturing of products that are sold into the GDF segment of the petroleum industry. The VST focus provides our customers and users with exceptional products, services, and innovative solutions for improving the fueling-station experience as well as the world's air quality.

VST's product offering includes curb pump and vapor recovery hoses, safety breakaways, nozzles, and emission-control system *Processor*s. The ENVIRO-LOC™ vapor-recovery product offering represents the most innovative concept in the industry for trapping fugitive vapors from the front end (vehicle refueling) to the back end (vent risers) of the GDF site.

# *Notice*

Vapor Systems Technologies, Inc. shall not be liable for errors contained herein or for incidental or consequential damages in connection with the furnishing, performance, or use of this publication.

No part of this publication may be translated to another language without the prior written consent of Vapor Systems Technologies, Inc.

# *Warranty*

- The warranty is conditional on whether the *Processor* was installed by a VST ASC Level B or a VST Level C.
- 12-month warranty becomes effective at the time of installation. If this card is not returned, the warranty becomes effective from the date of shipment at VST.
- VST cannot be held responsible for damage to the *Processor* or the *Processor* equipment (inclusive) due to acts of nature, vandalism, or neglect.
- Membranes exposed to gasoline (liquid) due to an overfill or any other reason voids the membrane warranty.
- VST products are warranted to be free of defects in material and workmanship.
- Liability under any expressed or implied warranty is limited to replacement of the product.
- Use of VST products on non-UL Listed systems, or use which falls outside intended field of use, voids any stated or implied warranty.
- VST is not responsible for misuse of, nor improperly installed, products.
- In the event of a warranty claim, the purchaser must obtain a copy of the Return Goods Authorization (RGA) prior to returning product to insure proper processing. Return shipping charges are the responsibility of the customer.
- Warranty status will be determined within 30 days of the return of suspected items.
- VST provides for a warranty program in conjunction with VST's exclusive serial number tracking system.
- Each VST product carries a unique serial number and warranty tracking card.
- Requests for warranty shall be through VST's Return Goods Authorization (RGA) procedure. Call VST at 937-704-9333.
- This warranty does not cover any components exposed to contact with fuels more than 5% menthanol, 10% ethanol, 15% MTBE by volume or any exposure to M85 / E85 fuel.

# Warranty Cards

**Vapor Systems Technologies, Inc.**

Phone: (937)-704-9333 • Fax: (937)-704-9443
www.vsthose.com

**IMPORTANT**
**PRODUCT WARRANTY**
**REGISTRATION CARD**

12 MONTH WARRANTY BECOMES EFFECTIVE AT TIME OF INSTALLATION. IF THIS CARD IS NOT RETURNED, WARRANTY BECOMES EFFECTIVE FROM DATE OF SHIPMENT FROM VST.

THE MAXIMUM WARRANTY LIFE IS 18 MONTHS FROM DATE OF SHIPMENT.

PLEASE CALL VST IF THIS PRODUCT IS BEING USED AS A REPLACEMENT. REPLACEMENT WITH A NON VST PRODUCT VOIDS ANY WARRANTY.

SERIAL NUMBER:
INSTALLATION DATE:
INSTALLATION SITE:
CITY/STATE/ZIP:
DISTRIBUTOR NAME:
PRODUCT STYLE:
☐ HOSE ☐ SAFETY BREAKAWAY
☐ NOZZLE ☐ ECS PROCESSOR

*Figure 1: VST Registration Card*

**NOTICE: THIS TAG MUST NOT BE REMOVED FOR ANY REASON**

**ECS MEMBRANE PROCESSOR UNIT**

**Serial Number:** _____

**Date Installed:** _____

**This device was factory tested and met all applicable performance standards and specifications to which it was certified.**

**Manufactured By: Vapor Systems Technologies, Inc.**
650 Pleasant Valley Dr., Springboro, Ohio 45066
Phone: (937) 704-9333, Fax: (937) 704-9443

*Figure 2: ECS Membrane Processor Sticker*

# *Components and Warranties*

| PART # | DESCRIPTION | WARRANTY |
|---|---|---|
| 5001-001 | Vacuum Pump/Three-Phase Motor - Shipped with Three-Phase *Processor* | 1 year |
| 5001-002 | Vacuum Pump/Single-Phase Motor - Shipped with Single-Phase *Processor* | 1 year |
| 5001-003 | Vacuum Pump Drive Coupling Rubber Insert | 1 year |
| 5002-001 | Circulating Blower / Three-Phase Motor - Shipped with Three-Phase *Processor* | 1 year |
| 5002-002 | Circulating Blower / Single-Phase Motor - Shipped with Single-Phase *Processor* | 1 year |
| 5003-001 | Check-Valve Assembly | 1 year |
| 5005-001 | Membrane | 1 year |
| 5006-001 | Membrane Housing, Complete | 1 year |
| 5006-011 | O-Ring (2) Vertical Tube | 1 year |
| 5006-012 | O-Ring (2) Base Insert | 1 year |
| 5006-013 | O-Ring (2) Membrane | 1 year |
| 5007-004 | Hydrocarbon Sensor | 1 year |
| 5008-001 | Heat-Trace Cable | 1 year |
| 5008-002 | Heat Trace Power Connection Kit | 1 year |
| 5008-003 | Heat Trace End Seal Kit | 1 year |
| 5010-001 | ECS Aluminum Cover | 1 year |
| 5012-100 | Membrane Tubing | 1 year |
| 5012-101 | Blower Inlet Tubing | 1 year |
| 5012-102 | Blower Outlet Tubing | 1 year |
| 5012-103 | Vacuum Pump Inlet Tubing | 1 year |
| 5012-104 | Vacuum Pump Outlet Tubing | 1 year |
| 5012-105 | HC Return Tubing | 1 year |
| 5012-106 | HC Inlet Tubing | 1 year |
| 5012-107 | Membrane Outlet Tubing | 1 year |
| 5013-001 | Insulation | 1 year |
| 5015-001 | HC Sentry Unit | 1 year |
| 5015-002 | HC Sentry Interface Cable | 1 year |

# *Activating the Processor Warranty*

Follow this process to activate the warranty on your *Processor.*

1. Make sure you have all the warranty paperwork. You should have:

   - ► A Warranty Card – See figure 1: 14-9.
   - ► A Post–Installation ChecklistA Post-Installation Power-Up Checklist.

2. Complete the Warranty Card

   - ► Completely fill out the card
   - ► Get the serial number of your *Processor* from the ECS Membrane Processor Sticker – See figure 2: 14-9.
   - ► Make a copy of the card for your files.
   - ► Place the completed, original card in an envelope for return mailing to VST.

3. Be sure the contractor who installs the *Processor* fills out the Post Installation Checklist.

   - ► Go over the form to be sure the contractor has filled it out completely and signed the form.
   - ► Make 2 copies of the form:
   - ▪ Original goes to VST.
   - ▪ One copy stays with the GDF.
   - ▪ One copy goes to the contractor.
   - ► Place the completed, original form in an envelope for return mailing to VST.
   - ► Give one copy to the contractor.
   - ► Place a copy in your files.

4. Be sure the contractor who performs the *Processor's* initial Power-Up fills out the Post-Installation Power-Up Checklist

   - ► Go over the form to be sure the contractor has filled it out completely and signed the form.
   - ► Make 2 copies of the form:
   - ▪ Original goes to VST.
   - ▪ One copy stays with the GDF.
   - ▪ One copy goes to the contractor.
   - ► Place the completed, original form in an envelope for return mailing to VST.
   - ► Give one copy to the contractor.
   - ► Place a copy in your files.

5. Seal the envelope and mail the three forms to VST:

   - ► The completed Warranty Card.
   - ► The completed and signed Post-Installation Checklist.
   - ► The completed and signed Post-Installation Power-Up Checklist.
   - ► The VST mailing address is:
     Vapor Systems Technologies, Inc.
     650 Pleasant Valley Drive
     Springboro, OH 45066

# *VST Contractor Requirements*

Due to the highly volatile nature of gasoline and its handling and storage, VST requires the following certifications for its ASC's:

| Level | Component | Authorized Tasks | Training Pre-Requisites |
|---|---|---|---|
| A<br>Must be re-certified every two years | Hanging Hardware | Functional Testing<br>Installation<br>Maintenance<br>Repair | No pre-requisite |
| A/B<br>Must be re-certified every two years | Hanging Hardware | Functional Testing<br>Installation<br>Maintenance<br>Repair | No pre-requisite |
| | Membrane *Processor* | Installation | Veeder-Root Level 1, 2/3, or 4 ASC certification |
| C<br>Must be re-certified every two years | Membrane *Processor* | Annual Testing<br>Component Replacement<br>Maintenance<br>Operation<br>Post-Installation Power-Up Testing<br>Start-Up<br>Testing<br>Troubleshooting | VST Level "A/B"<br><br>Veeder-Root UST Monitoring Systems Level 2/3 or 4<br><br>Veeder-Root ASC w/VST PMC/ISD certification |
| NOTE:<br><br>Depending on local codes, in addition to the VST and Veeder-Root training, contractors may be required to take air-district training or ICC certification as an approved vapor-recovery installer. | | | |

- ASC's must be able to show proof of certification if asked. Carry the wallet card or have a copy of your certification on file with the GDF.
- The ASC must record his or her certification number on the applicable paperwork for all warranties to be deemed valid.
- Contractors should ALWAYS verify the training and certification requirements with the air-district staff BEFORE beginning installation of EVR systems.

# *Veeder-Root Contractor Requirements*

| | |
|---|---|
| Veeder-Root Level 1 | Contractors holding valid Level 1 Certification are approved to perform wiring and conduit routing, equipment mounting, probe and sensor installation, tank and line preparation, and line leak detector installation. |
| Veeder-Root Level 2/3 or 4 | Contractors holding valid Level 2, 3, or 4 certifications are approved to perform installation checkout, startup, programming and operations training, troubleshooting and servicing for all Veeder-Root Tank Monitoring Systems, including Line Leak Detection and associated accessories. |
| PMC / ISD | This course of training includes In-Stations Diagnostics/Pressure Management Control (ISD/PMC) installation checkout, startup, programming, and operations training. It also includes troubleshooting and service techniques for the Veeder-Root In-Station Diagnostics system. A current level 2/3 or 4 certification is a prerequisite for the ISD/PMC course. After successful completion of this course the contractor will receive a certificate as well as a Veeder-Root ISD/PMC contractor certification card. |
| Warranty Registrations may only be submitted by selected distributors. | |

# *Safety Icons*

| | | | |
|---|---|---|---|
| | ELECTRICITY<br>A potential shock hazard exists. High voltage is supplied to and exists in this device. | | TURN POWER OFF<br>Turn power off to the device and its accessories when installing and servicing the unit. Live power creates a potential spark hazard. |
| | EXPLOSIVE<br>Gasoline and its vapors are extremely explosive if ignited. | 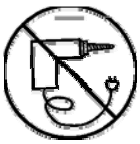 | NO POWER TOOLS<br>Sparks from electric power tools can ignite gasoline and its vapors. |
| | FLAMMABLE<br>Gasoline and its vapors are extremely flammable. | | NO PEOPLE IN THE AREA<br>Unauthorized people in the work area during installation and service of the device create a potential for personal injury. |
| | NO SMOKING<br>Gasoline and its vapors can be ignited by sparks and embers of burning cigarettes. | | READ ALL RELATED MATERIALS<br>Read, understand, and follow all instructions, warnings, and requirements before you begin work. |
| | NO OPEN FLAMES<br>Open flames from sources like lighters and matches can ignite gasoline and its vapors. | | USE SAFETY BARRICADES<br>Unauthorized people in the work area during installation and service of the device create a potential for personal injury. Therefore, always isolate your work area by using safety cones, barricades, etc. |
| | PINCH RISK<br>Stay clear. Keeps hands and tools away from rotating machinery and moving parts. | | ROTATING MACHINERY<br>Stay clear. Keep hands and tools away from rotating machinery. |

# *Table of Terms & Abbreviations*

| | |
|---|---|
| ASC: | Authorized Service Contractor |
| AQMD: | Air Quality Management Districts |
| ATG: | Automatic Tank Gauge |
| CARB: | California Air Resources Board |
| CDFA: | California Department of Food & Agriculture |
| CVLD: | Continuous Vapor Leakage Detection, another name for Vapor Leak Detection |
| ECS: | Emissions Control System |
| EO: | Executive Order |
| EVR: | Enhanced Vapor Recovery |
| GDF: | Gasoline Dispensing Facility |
| HC: | Hydrocarbon |
| HC IR: | Hydrocarbon Infrared |
| ISD: | In-Station Diagnostics |
| MAG Probe: | A type (brand) of Tank Inventory Probe |
| NEC: | National Electric Code |
| NFPA: | National Fire Protection Association |
| ORVR: | On-Board Refueling Vapor Recovery |
| OSHA: | Occupational Safety Health Administration |
| Permeate: | Air return to atmosphere |
| PLC: | Programmable Logic Control |
| PMC: | Pressure Management Control |
| Retentate: | Vapor return to UST |
| RVP: | Reid Vapor Pressure |
| TLS: | Tank Level System |
| TLS Console: | Veeder-Root's line of environmental monitoring consoles. |
| TS: | Troubleshooting |
| Ullage: | Vapor space above liquid in a UST |
| UST: | Underground Storage Tank |
| VCK: | Vapor Collection Kit |
| Veeder Root: | Manufacturer of the TLS-350 |
| VOC: | Volatile Organic Compounds |
| VST: | Vapor Systems Technologies, Inc. - manufacturer of the ECS Membrane *Processor* |
| WC: | Water Column |

# 1 ECS Membrane Processor Overview

## 1.1 ECS Membrane Processor Theory of Operation

- The VST ECS membrane *Processor* does not interact directly with the other balance system hardware. It is in place to monitor and control the pressure in the UST to within limits specified by CARB.

  Under conditions where the GDF is operational and the balance system hardware is functioning normally, the inherent ORVR compatibility of the balance system (when using VST's ENVIRO-LOC nozzle) will produce a predominately negative gauge pressure in the ullage space of the UST. Under these conditions the ECS membrane *Processor* will typically not need to operate.

  During periods of less activity, the GDF being shut down overnight, winter fuels being present, or other conditions that promote the pressurization of the ullage space, the ECS membrane *Processor* will operate as needed to control the pressure in the ullage space to an accepted level. The ECS membrane *Processor* will turn on at an ullage pressure of +0.20 inches of water and turn it off at a pressure of –0.20 inches of water. Currently, the ECS membrane *Processor* unit is monitored and controlled through the PMC or ISD software.

- The ECS membrane *Processor* uses a type of membrane technology to enable it to selectively separate the components in the ullage vapor mixture.

  Through a somewhat complex transport means, certain molecules will selectively travel in a stream from one side of the membrane to the other. This stream is referred to as the permeate stream.

  In this case, predominate molecules transported across the membrane will be the primary constituents of air, which are oxygen, nitrogen, and water vapor. A small amount of the hydrocarbons present in the ullage mixture will also migrate across the membrane. Typically, permeate will contain less than 3.0% hydrocarbons. The result of this activity includes, fresh air vented to atmosphere, hydrocarbon vapors returned to the UST, and UST pressurization controlled to an acceptable level.

- The process of separation by the membrane is made possible by using two pumps, one low-pressure pump which circulates the ullage vapor mixture along one side of the membrane, and one high-vacuum pump, which creates the pressure differential needed to cause the permeate transport across the membrane. These are the only moving parts in the system.

## 1.2 Overview of How the Processor Operates

- The Processor is a technology created for Gasoline Dispensing Facilities (GDF) to assist them in reducing the number of harmful emissions released to the atmosphere through the natural occurrence of gasoline vaporization.

- The table below lists the steps that the Veeder-Root TLS 350 and the software takes to control the Processor.

| | |
|---|---|
| 1. | • When the UST system pressure rises above +0.2"WC, the *Processor* turns ON. |
| 2. | • Through the vapor inlet pipe connection at the *Processor*, the VOC vapor is drawn into the suction side of the blower. |
| 3. | • The blower discharges the VOC vapor into the membrane housing. |
| 4. | • Inside the membrane housing, the VOC vapor is separated in to two air streams:<br>► VOC depleted air (referred to as "air")<br>► Gasoline VOC vapor<br>• The membrane is designed specifically for separating air from gasoline VOC vapor. |
| 5. | • A vacuum pump draws the air from the membrane housing through a check valve. |
| 6. | • A sample of the air flows through a hydrocarbon sensor to check the percent hydrocarbons. |
| 7. | • From the vacuum pump, the air is vented to atmosphere via the air return. |
| 8. | • The gasoline VOC vapor returns to the UST system via the vapor return. |
| 9. | • When the UST system pressure drops below -0.2"WC, the *Processor* turns OFF. |

## 1.3 Processor Dimensions and Weight

| Part Number | Unit | Dimensions | Weight |
|---|---|---|---|
| VST-ECS-CS3-110 | Single-Phase | L-39" x W-27" x H-43"<br>Height includes 18" legs | 385 lbs.<br>Includes 24-lb. cover |
| VST-ECS-CS3-310 | Three-Phase | L-39" x W-27" x H-43"<br>Height includes 18" legs | 350 lbs.<br>Includes 24-lb. cover |

## 1.4 Processor Components and Their Purpose

| PART # | DESCRIPTION | PURPOSE |
|---|---|---|
| 5001-001 | Vacuum Pump / Three-Phase Motor<br>Shipped with Three-Phase *Processor* | Draws air through the membrane housing to the atmosphere. |
| 5001-002 | Vacuum Pump / Single-Phase Motor<br>Shipped with Single-Phase *Processor* | |
| 5001-003 | Vacuum Pump Drive Coupling Rubber Insert | Drive coupling rubber insert. |
| 5002-001 | Circulating Blower / Three-Phase Motor<br>Shipped with Three-Phase *Processor* | The blower circulates the vapor from the UST system through the separation membrane located inside the *Processor* back to the UST system. |
| 5002-002 | Circulating Blower / Single-Phase Motor<br>Shipped with Single-Phase *Processor* | |
| 5003-001 | Check-Valve Assembly | Eliminates outside air from entering the UST's. |
| 5005-001 | Membrane | By means of the circulating blower, the vapor from the UST system continuously flows through the membrane housing, which holds the membrane cartridge. This happens only while the *Processor* is running.<br><br>The membrane cartridge separates the air from the VOC inlet vapor, returning a concentrated VOC stream back into the storage tank while the air is vented to the atmosphere.<br><br>The membrane and housing use UL approved o-rings. |
| 5006-001 | Membrane Housing, Complete | Houses the membrane cartridge. |
| 5006-011 | O-Ring (2) Vertical Tube | Prevents hydrocarbons from leaking into the atmosphere. |
| 5006-012 | O-Ring (2) Base Insert | Prevents the separated air from mixing with concentrated hydrocarbons. |
| 5006-013 | O-Ring (2) Membrane | |
| 5007-004 | Hydrocarbon Sensor | The HC Sensor continuously monitors the amount of hydrocarbons in the air stream being vented to the atmosphere. This happens only while the *Processor* is running.<br><br>A 4-20mA signal is sent to the TLS-350 controller that monitors the hydrocarbon percentage by volume.<br><br>24VDC power is required and is supplied from the HC sentry. |

| PART # | DESCRIPTION | PURPOSE |
|---|---|---|
| 5008-001 | Heat-Trace Cable | A self-regulating heat trace cable wraps around the membrane housing and is designed to keep the membrane housing temperature between 100°-150° F.<br><br>Power is continuously applied to the heat-trace cable 100% of the time whether the *Processor* is running or not.<br><br>The power requirements are 115 VAC at 130 watts per foot, with a maximum of 2 amps draw.<br><br>On the end of the heat-trace cable is an end-seal kit to terminate the cable. |
| 5008-002 | Heat Trace Power Connection Kit | Connection for 115V power. |
| 5008-003 | Heat Trace End Seal Kit | End circuit connection. |
| 5010-001 | ECS Aluminum Cover | Protective Cover |
| 5012-100 | Membrane Tubing | Internal Vapor Tubing |
| 5012-101 | Blower Inlet Tubing | |
| 5012-102 | Blower Outlet Tubing | |
| 5012-103 | Vacuum Pump Inlet Tubing | |
| 5012-104 | Vacuum Pump Outlet Tubing | |
| 5012-105 | HC Return Tubing | |
| 5012-106 | HC Inlet Tubing | |
| 5012-107 | Membrane Outlet Tubing | |
| 5013-001 | Insulation | 1” thick insulation encases the membrane housing and the heat trace cable to preventing unnecessary heat loss. |

## 1.5 Processor Auxiliary Components

| PART # | COMPONENT | DESCRIPTION |
|---|---|---|
| 5015-001 | HC Sentry Interface Module w/24VDC power supply | The HC Sentry module acts as an interface between the TLS and the HC sensor.<br><br>115v power is supplied to the HC sentry module, which supplies 24VDC power to the HC sensor.<br><br>A 4-20 mA signal is sent from the HC sensor to the HC sentry module, which converts the signal to a proprietary code for the TLS-350. |
| 5015-002 | HC Sentry Interface Cable | Connects the HC Sentry to the TLS-350. |

## 1.6 Processor Manuals

| Manual # | Manual Name | Section |
|---|---|---|
| 9520-001 | ECS Membrane Processor with PMC/ISD: Installation Manual | IOM-14 |
| 9520-002 | ECS Membrane Processor with PMC/ISD: OM&S | IOM-15 |
| 9514-003 | ECS Membrane Processor with PMC/ISD: Troubleshooting Guide | www.vsthose.com |
| 9514-004 | ECS Membrane Processor with PMC/ISD: Pre-Installation Site Survey | www.vsthose.com |

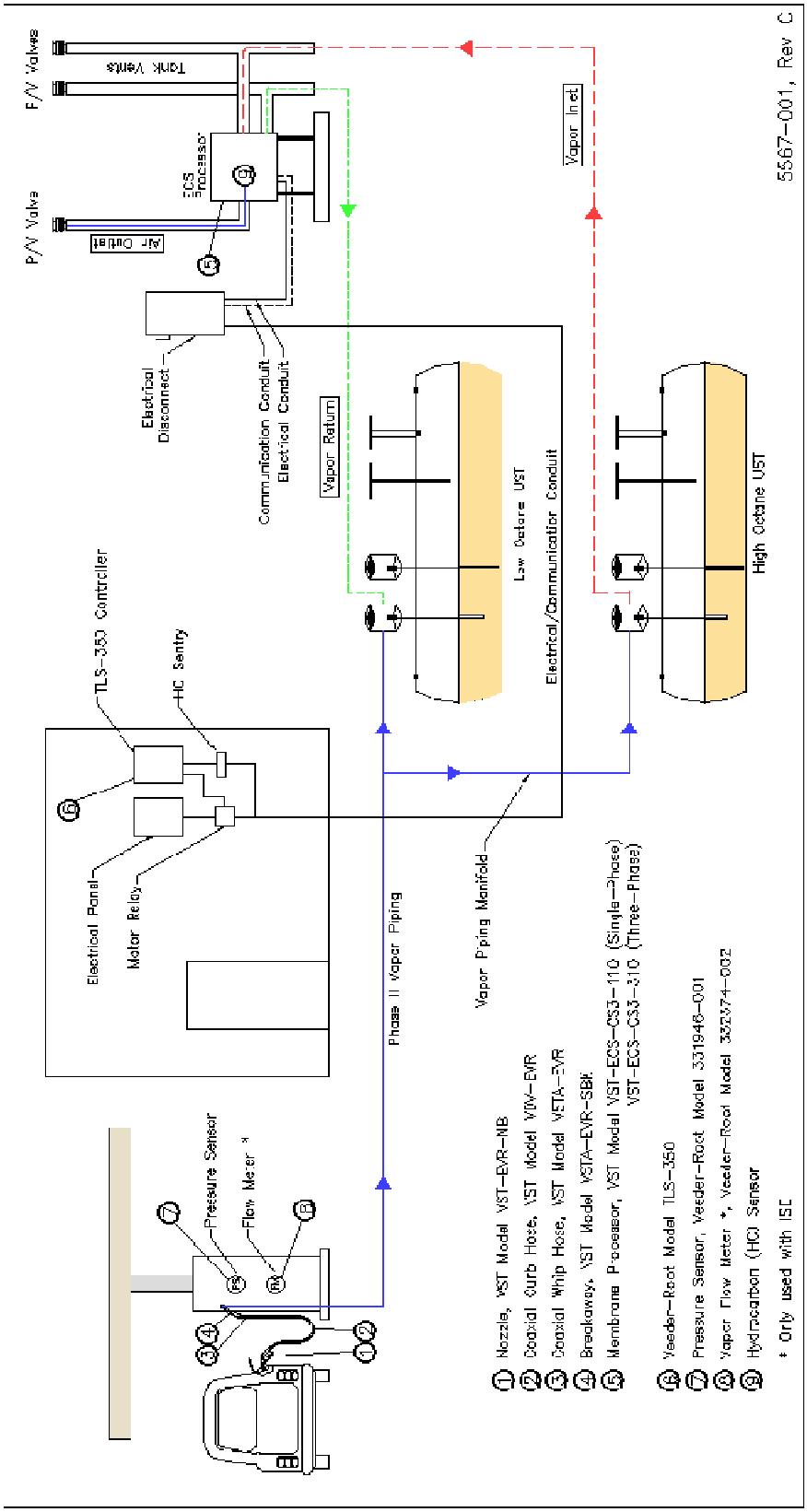


*Figure 3: How the Processor fits into the GDF layout*

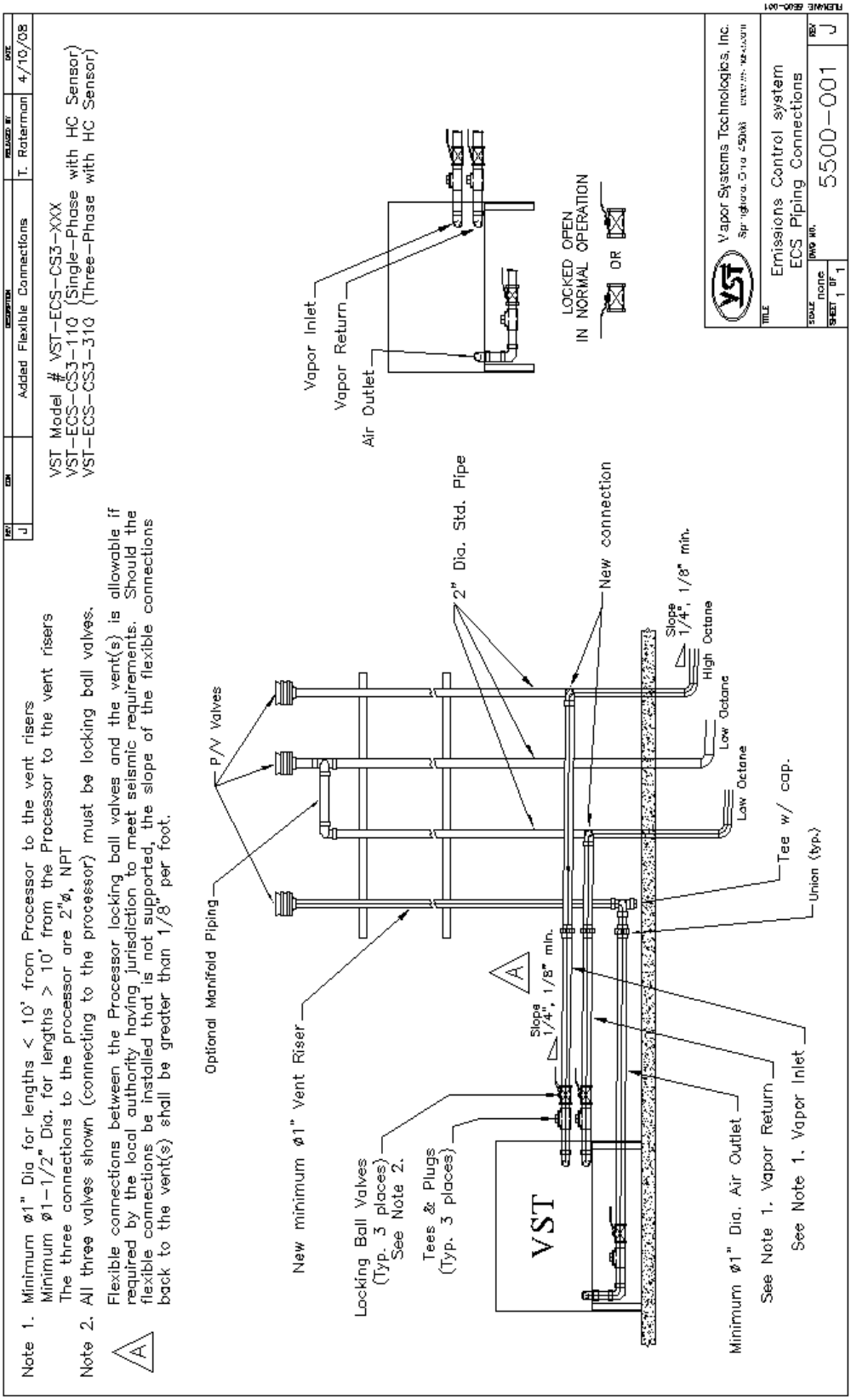


*Figure 4: Processor Piping Diagram*

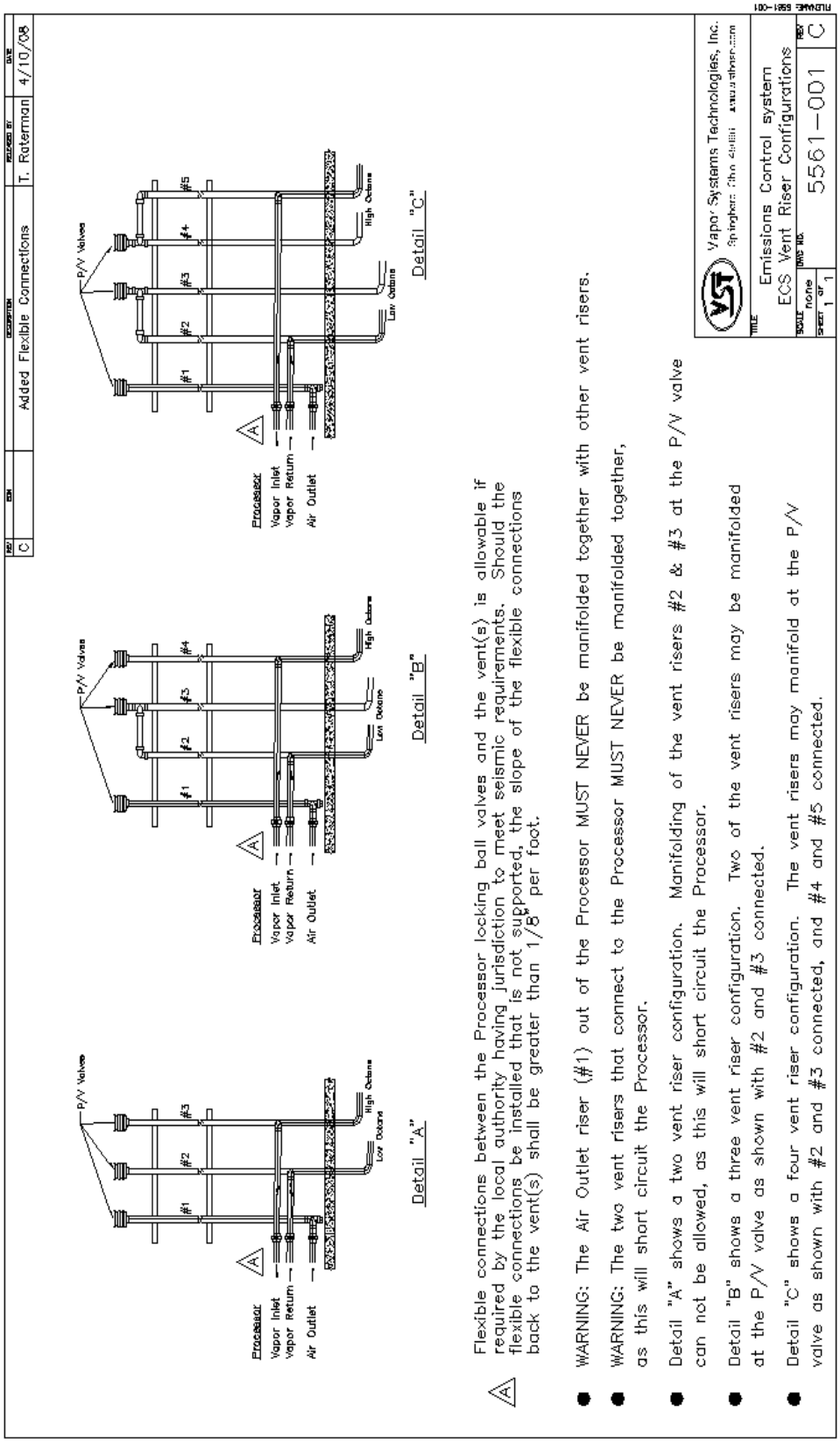


*Figure 5: ECS Vent Configurations*

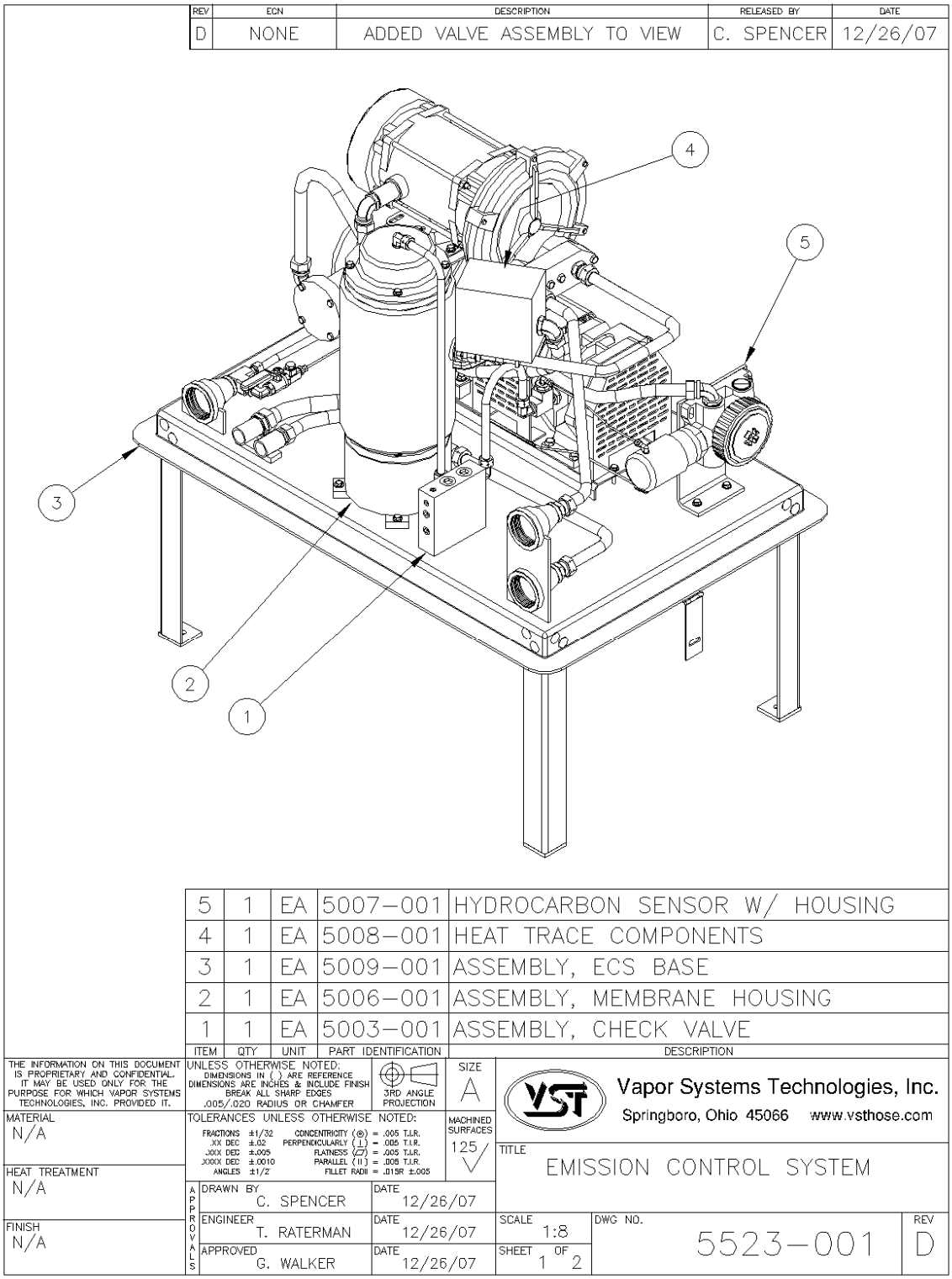


*Figure 6: Processor Isometric Drawing (1 of 2)*

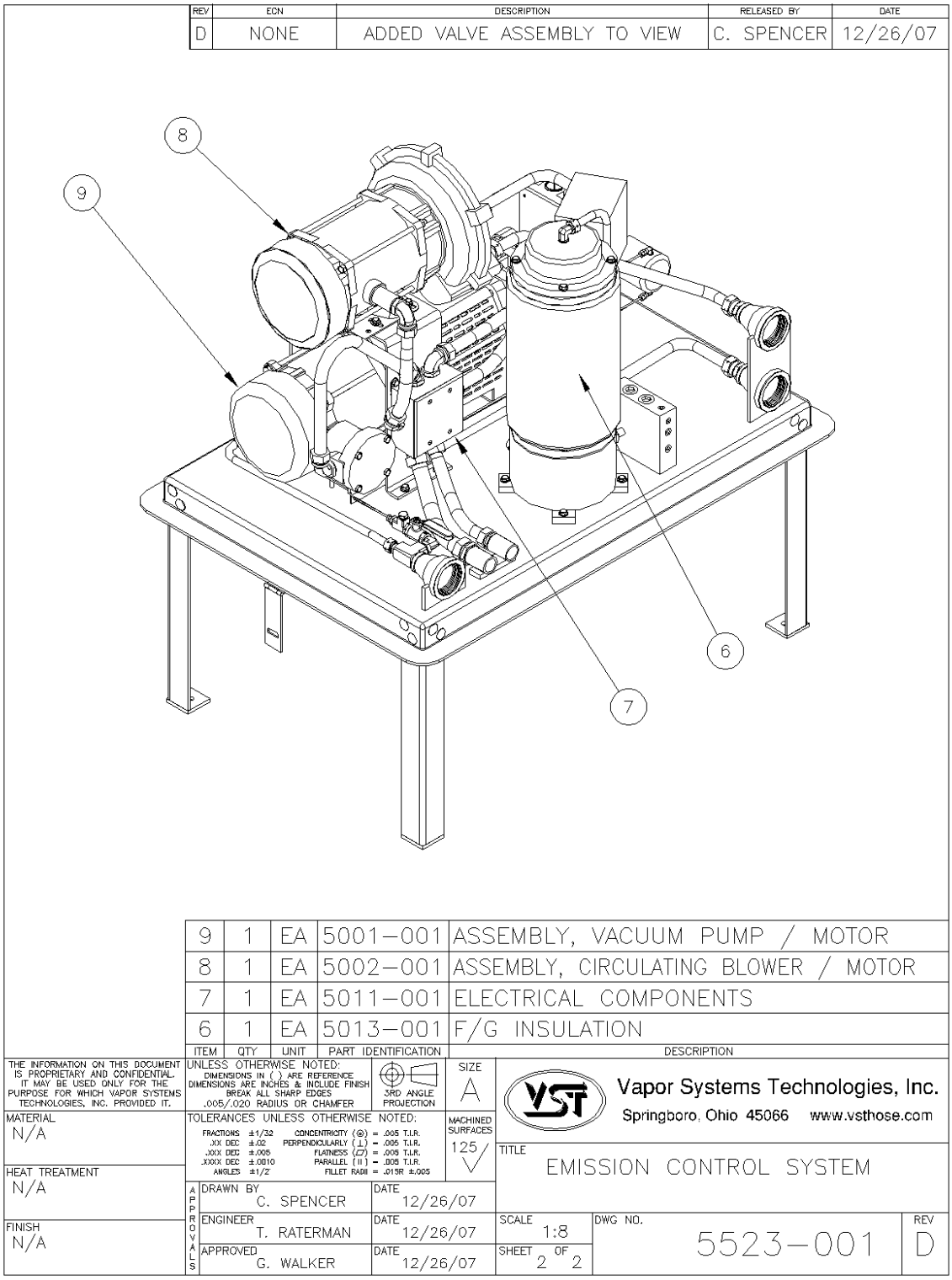


*Figure 7: Processor Isometric Drawing (2 of 2)*

# 2 *Processor* Operation

- The Veeder-Root Pressure software controls the *Processor* and is located within the TLS-350 console. The TLS-350 is an automatic tank gauging, compliance, and fuel-management system.

- The TLS-350 will be configured for either PMC or ISD control software.

- Warnings and alarms are announced through the various lights on the panel as well as through a paper print-out.

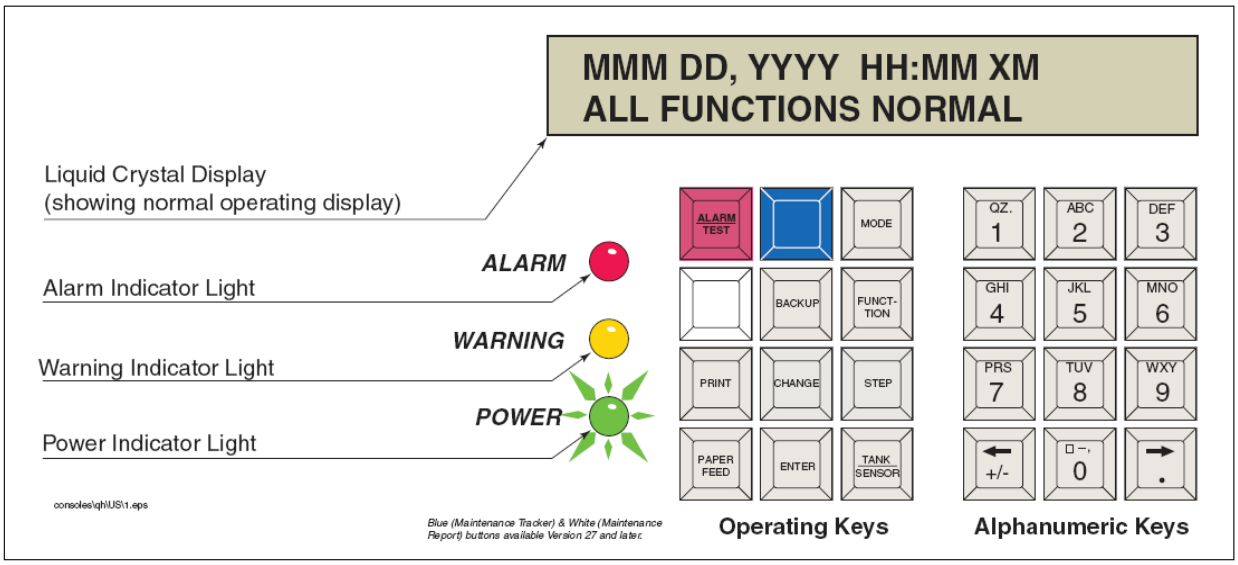


*Figure 8: TLS-350 Face*

## 2.1 TLS 350 Construction

- The *TLS Console* is constructed with fuel compatible materials and is approved for use in GDF's by UL (Underwriters Laboratories, Inc.) where wetted components and materials are tested for durability and resistance to corrosion.

- The *TLS Console* is designed to withstand power outages by storing critical system parameters in nonvolatile memory.

- The pressure sensor (supplied by Veeder-Root) is installed inside a dispenser.

## 2.2 Automatic Control

- Under automatic control, vapor pressure readings are compared to the programmed ON/OFF thresholds to determine the appropriate *Processor* state.

  - ► When the *Processor* is OFF and the UST pressure equals or exceeds the programmed ON vapor pressure threshold, the *Processor* is turned ON and remains so until the pressure equals or is less than the programmed OFF vapor pressure threshold.

  - ► During periods when there are no deliveries, if the *Processor* is ON continuously for longer than the programmed max 30 minutes runtime, the *Processor* is turned OFF.

  - ► It will remain OFF for the same number of minutes programmed as max runtime minutes before turning back ON.

  - ► It will continue to cycle on and off until the vapor pressure drops below the low/off threshold limit.

- During a delivery, if the *Processor* ON time exceeds the maximum run time, the *Processor* will be shut OFF.

  - ► After 3 seconds the *Processor* will be turned back ON if the pressure is above the high pressure threshold limit.

  - ► This cycle will continue until the delivery has ended or the pressure goes below the low pressure threshold and the *Processor* is turned OFF.

## 2.3 Manual Control of the Processor

- From the PMC diagnostic menu, the *Processor* mode can be changed from Automatic to Manual.

- When the *Processor* control mode is Manual, the diagnostic menu allows the *Processor* to be directly turned ON and OFF.

  ► This feature is to support the testing functionality of the *Processor* or compliance testing without needing the pressure to be at operational set points.
  ► This is especially useful if the vapor space has been disturbed through the course of repair or testing.

- The current vapor pressure threshold settings are available through the diagnostic menu.

- Note: If the *Processor* is ON and the control mode is Automatic, changing the control mode to Manual mode will turn the *Processor* OFF.

- This feature is to support testing functionality of the *Processor* without needing the pressure to be at operational set-points.

- This function is also to be used for conducting testing or at any time compliant-testing involves opening of the vapor space.

- The current vapor pressure reading will also be available through the diagnostic menu.

> At the conclusion of any testing or repairs, verify that the *Processor* has been set to "AUTOMATIC mode" at the TLS-350.

## 2.4 TLS Alarms

- During normal operation when the system is functioning properly and no warning or alarm conditions exist, the "ALL FUNCTIONS NORMAL" message will appear in the system status (bottom) line of the console display.

- If a warning or alarm condition occurs, the system displays the condition type and its location.

- If more than one warning or alarm condition exists, the display will alternately flash the appropriate messages.

- The system automatically prints an alarm report showing the warning or alarm type, its location, and the date and time the warning or alarm condition occurred.

- Warning and alarm posting causes the TLS 350 to activate:
  - ► Warning lights
  - ► Failure-Alarm indicator lights
  - ► Audible alarm
  - ► Automatic strip paper printout documenting the warning or alarm

## 2.5 Thresholds and Algorithms

- Two thresholds (high and low pressure) are used to activate and deactivate the *Processor* internal TLS-350 relay.

- Three thresholds can be set via the TLS keypad or serial RS232 commands. These thresholds include:

  - ► Vapor *Processor* **LOW PRESSURE THRESHOLD** set at -0.2" WC
    - ▪ Maximum negative UST pressure required in order to turn OFF the *Processor*

  - ► Vapor *Processor* **HIGH PRESSURE THRESHOLD** set at +0.2" WC
    - ▪ Minimum positive UST pressure required in order to turn ON the *Processor*

  - ► Vapor *Processor* runtime set at 30 minutes
    - ▪ Maximum allowable runtime

- The TLS 350 control algorithm checks the current UST pressure level and turns the *Processor* **ON** and **OFF** according to the high and low pressure thresholds.

- All WARNINGS and ALARMS should be resolved and then followed by CLEAR TEST AFTER REPAIR (found in the TLS menu) regardless of PMC and ISD software.

- The Veeder-Root Pressure Sensor (VRPS) reads every 20 seconds, and this reading is compared to the vapor-pressure thresholds to determine the *Processor* state, which will be either **ON** or **OFF**.

- DUE TO THE SAMPLE RATE OF 20 SECONDS, SOME DELAY OCCURS IN POSTING. THE ACTUAL VALUES DISPLAYED ON THE TLS MAY BE SLIGHTLY HIGHER THAN THE +.2"wc AND SLIGHTLY LOWER THAN THE -.2"WC SET POINTS.

- When the *Processor* is **OFF** and the high-vapor pressure threshold (+0.2"WC) is exceeded, the relay is enabled (which starts the *Processor*), and the relay remains enabled until the pressure drops below the low-vapor pressure (-0.2"WC) threshold.

- Automatic control is the default mode.

- The internal relay must be programmed as a **VST VAPOR *PROCESSOR*** (VP) through the TLS 350 relay setup menu.

- The *Processor* control algorithm will not be engaged until at least one relay of this type is detected by the TLS 350.

- Whenever the *Processor* runs more than 30 minutes,
  (whether you're using PMC or ISD software) the *Processor* is *automatically* turned OFF.
  - ► During this 30-minute period, the *Processor* will not be controlled by UST pressure and will remain OFF for 30 minutes.

- The *Processor* will then restart assuming the UST pressure is still above the lower threshold setting and the TLS is in the automatic controlled mode.

- Figure 9: Page 15-31 shows the *Processor Run*-Time Algorithm.

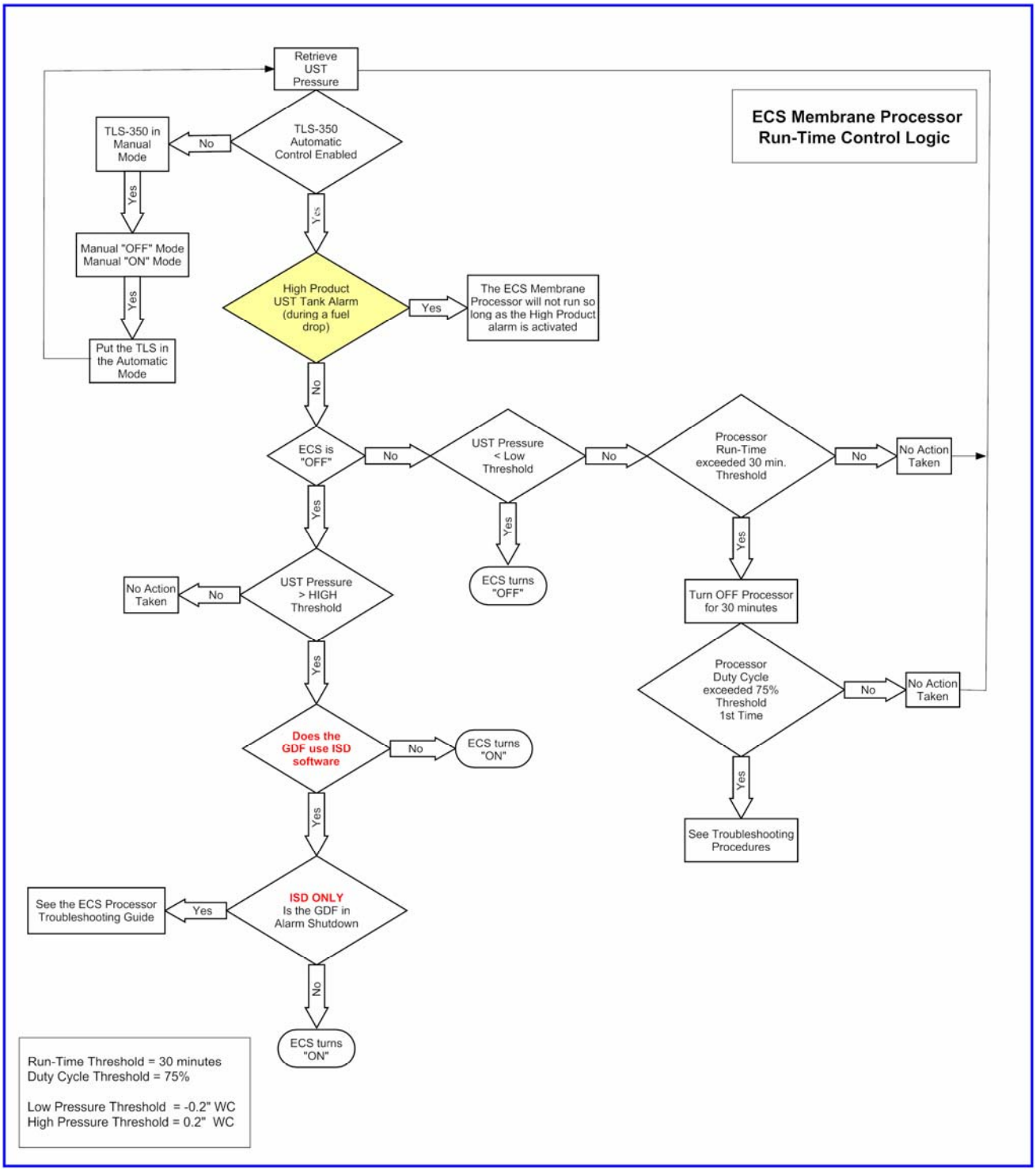


*Figure 9: Processor Run-Time Algorithm*

### 2.5.1 TLS-350 (PMC): Alarm Troubleshooting Summary

| PMC Alarm Troubleshooting Summary | | | | |
|---|---|---|---|---|
| Message | PMC Category | Light | Cause | Suggested Troubleshooting |
| VP EMISSION WARN | Processor | Yellow | Mass emission exceeded the certified threshold. | • Troubleshooting Guide found out www.vsthose.com.<br>• Exhibit 6<br>• Exhibit 9<br>• VST ASC Level C |
| VP EMISSION FAIL | Processor | Red | 2nd Consecutive Mass emission test failure. | |
| ISD VP PRESSURE WARN | Processor | Yellow | 90th percentile of 1 day ullage pressure exceeds 1 IWC. | • Troubleshooting Guide www.vsthose.com.<br>• Exhibit 8<br>• Exhibit 9<br>• VST ASC Level C |
| ISD VP PRESSURE FAIL2 | Processor | Red | 2nd Consecutive Failure of Vapor Processor Overpressure Test | |
| VP DUTY CYCLE WARN | Processor | Yellow | Duty cycle exceeds 18 hours per day 0r 75% of 24 hours. | • Troubleshooting Guide www.vsthose.com.<br>• TLS 350 PMC Setup Procedure<br>• Exhibit 8<br>• Exhibit 9<br>• Exhibit 4<br>• VST ASC Level C |
| VP DUTY CYCLE FAIL | Processor | Red | 2nd Consecutive Duty Cycle Test Failure. | |
| NOTE: All exhibits can be found in Executive Orders VR-203 and VR-204. VR-203 is for those systems using PMC. VR-204 is for those systems using ISD. | | | | |

### 2.5.2 TLS-350 (ISD): Alarm Troubleshooting Summary

| ISD Alarm Troubleshooting Summary | | | | |
|---|---|---|---|---|
| Message | ISD Category | Light | Cause | Suggested Troubleshooting[1] |
| ISD VAPOR LEAKAGE WARN | Containment | Yellow | Containment system leaks at 2 times the TP-201.3 standard. | • Troubleshooting Guide found at www.vsthose.com<br>• Exhibit 4<br>• VST ASC Level C |
| ISD VAPOR LEAKAGE FAIL[2] | Containment | Red | 8th Consecutive Failure of Pressure Integrity (Vapor Leak) Test | |
| ISD GROSS PRESSURE WARN | Containment | Yellow | 95th percentile of 7-days' ullage pressure exceeds 1.3 IWC. | • Troubleshooting Guide found at www.vsthose.com<br>• Exhibit 8<br>• Exhibit 9<br>• VST ASC Level C |
| ISD GROSS PRESSURE FAIL[2] | Containment | Red | 8th Consecutive Failure of Gross Containment Pressure Test | |
| ISD DEGRD PRESSURE WARN | Containment | Yellow | 75th percentile of 30-days' ullage pressure exceeds 0.3 IWC. | |
| ISD DEGRD PRESSURE FAIL[2] | Containment | Red | 31st Consecutive Failure of Degradation Pressure Test | |
| hnn[3]: FLOW COLLECT WARN | Collection | Yellow | Vapor collection flow performance is less than 50%. | • Troubleshooting Guide found at www.vsthose.com. Exhibit 11<br>• VST ASC Level C |
| hnn[3]: FLOW COLLECT FAIL[2] | Collection | Red | 2nd Consecutive Failure of Vapor Collection Flow Performance Monitoring Test | |
| ISD VP* STATUS WARN | Processor | Yellow | Failure of Vapor Processor Effluent Emissions or Duty Cycle test. | • Troubleshooting Guide found at www.vsthose.com.<br>• VP Emission Test<br>• VP Duty Cycle Test<br>• VST ASC Level C |
| ISD VP STATUS FAIL[2] | Processor | Red | 2nd Consecutive Failure of Vapor Processor Status test. | |
| ISD VP PRESSURE WARN | Processor | Yellow | 90th percentile of 1 day ullage pressure exceeds 1 IWC. | • Troubleshooting Guide found at www.vsthose.com.<br>• Exhibit 8<br>• Exhibit 9<br>• VST ASC Level C |
| ISD VP PRESSURE FAIL[2] | Processor | Red | 2nd Consecutive Failure of Vapor Processor Overpressure Test | |

[1]See ISD Troubleshooting Manual P/N 577013-819 and the VST ISD Troubleshooting Guide 9513-003 found at www.vsthose.com for a complete list of suggestions.
[2]ISD Site shut down alarms [3]Hose Number *VP = Vapor Processor

| ISD Alarm Troubleshooting Summary | | | | |
|---|---|---|---|---|
| Message | ISD Category | Light | Cause | Suggested Troubleshooting[1] |
| VP EMISSION WARN | Processor | Yellow | Mass emission exceeded the certified threshold. | • Troubleshooting Guide found at www.vsthose.com.<br>• Exhibit 6<br>• Exhibit 9<br>• VST ASC Level C |
| VP EMISSION FAIL | Processor | Red | 2nd Consecutive Mass emission test failure. | |
| VP DUTY CYCLE WARN | Processor | Yellow | Duty cycle exceeds 18 hours per day 0r 75% of 24 hours. | • Troubleshooting Guide found at www.vsthose.com.<br>• PMC Setup Procedure<br>• Exhibit 8<br>• Exhibit 9<br>• Exhibit 4<br>• VST ASC Level C |
| VP DUTY CYCLE FAIL | Processor | Red | 2nd Consecutive Duty Cycle Test Failure. | |
| ISD SENSOR OUT WARN | Self-Test | Yellow | Failure of Sensor Self-Test | • Confirm ISD sensor & module installation / communication per VR 204 IOM Section 16, Chapter 2<br>• VST ASC Level C |
| ISD SENSOR OUT FAIL | Self-Test | Red | 8th Consecutive Failure of Sensor Self-Test | |
| ISD SETUP WARN | Self-Test | Yellow | Failure of Setup Test | • Confirm EVR/ISD programming per VR 204 IOM Section 16<br>• VST ASC Level C |
| ISD SETUP FAIL[2] | Self-Test | Red | 8th Consecutive Failure of Setup Test | |

[1]See ISD Troubleshooting Manual P/N 577013-819 and the VST ISD Troubleshooting Guide 9513-003 found at www.vsthose.com for a complete list of suggestions.
[2]ISD Site shut down alarms *VP=Vapor Processor

NOTE: All exhibits can be found in Executive Orders VR-203 and VR-204.
VR-203 is for those systems using PMC. VR-204 is for those systems using ISD.

# 3 Post-Installation Power-Up Tests

During post-installation testing, the *Processor* will use outside air, not gasoline vapor from the USTs to conduct these tests.

- Close the 3 valves located on the inlet and the outlets of the *Processor.*
- Remove the plugs on the 3 tees located on the inlet and the outlets of the *Processor.*

## 3.1 Post-Installation Electrical Connections

- Prior to starting the *Processor*, the Motor Starter Relay Coil must be wired to the TLS-350 4-Relay Module. The *Processor* cannot start until this connection is made.

<u>CAUTION: Make sure the TLS-350 is in the Manual OFF Mode prior to installing the wires. Make sure the power to the motors is OFF at the electrical panel</u>.

- Install two 18-gauge wires that connect the Motor Starter Relay Coil to the TLS-350 4-Relay Module.
- See Figure 10: Page 15-36 for connections to the TLS-350.
- Leaving the TLS-350 in the Manual OFF Mode, the power to the motors can be turned ON at the electrical panel.
- After the connection has been made, proceed to the Post-Installation Power-Up Tests.
- See Section 3.2: Page 15-37.

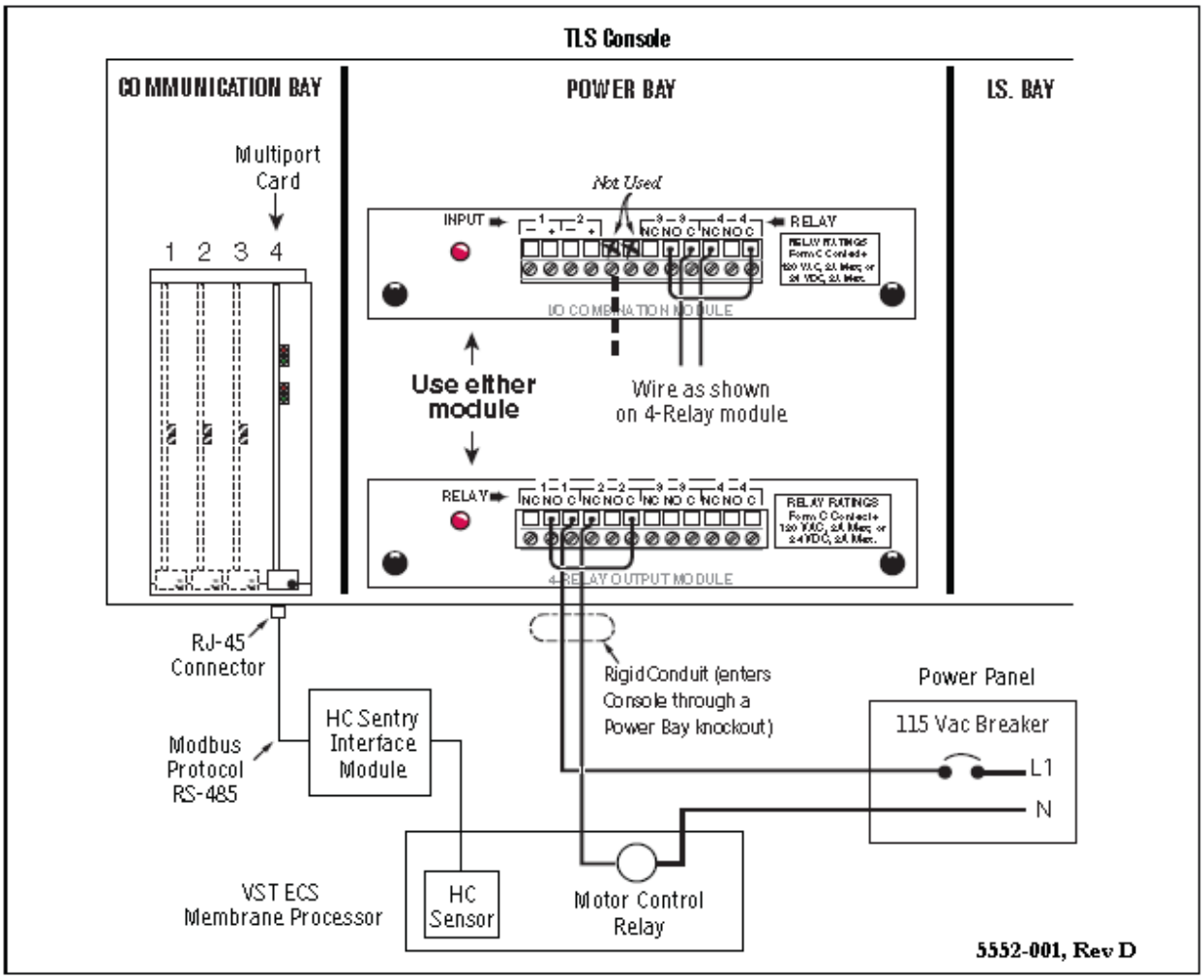


*Figure 10: Wiring the Motor Starter Relay Coil*

## 3.2 Required Post-Installation Power-Up Tests

- These tests are used for the Post-Installation Power-Up and Troubleshooting Test.

- Once you have properly prepared the Processor for testing, conduct tests 1 through 4 found in the table below.

| | Test | Page |
|---|---|---|
| 1. | Electrical Connection Check | 15-41 |
| 2. | Motor Rotation Test | 15-41 |
| 3. | Heat-Trace Continuity Test | 15-47 |
| 4. | HC Sensor & HC Sentry 24 Power Test | 15-48 |

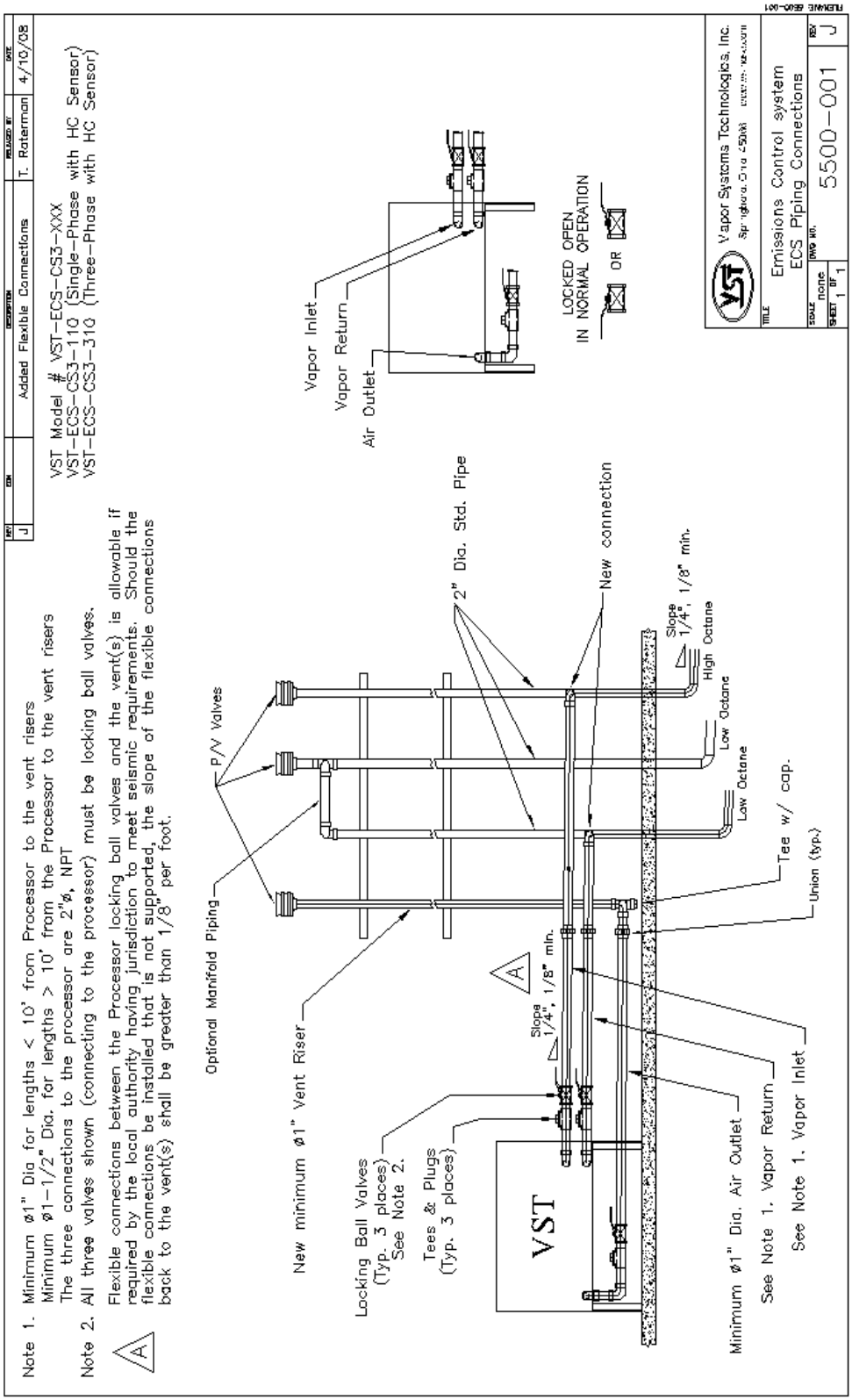


*Figure 11: ECS Piping Configuration*

## 3.3 TLS Manual Mode

- Follow the steps at the TLS console to put theTLS-350 in the Manual "OFF" Mode, as shown in Figure 12: Page 15-39 for the PMC Diagnostic Menu and Figure 13: Page 15-40 for the ISD Diagnostic Menu.

- After the post-installation power-up tests are complete, put the *Processor* in the Manual "OFF" position.

- ALWAYS BE SURE TO REFER TO THE MOST RECENT VEEDER-ROOT PMC MANUAL (Manual #577013-801).

## PMC Diagnostic Menu with PMC Software (taken from Manual #577013-801 Rev. B)

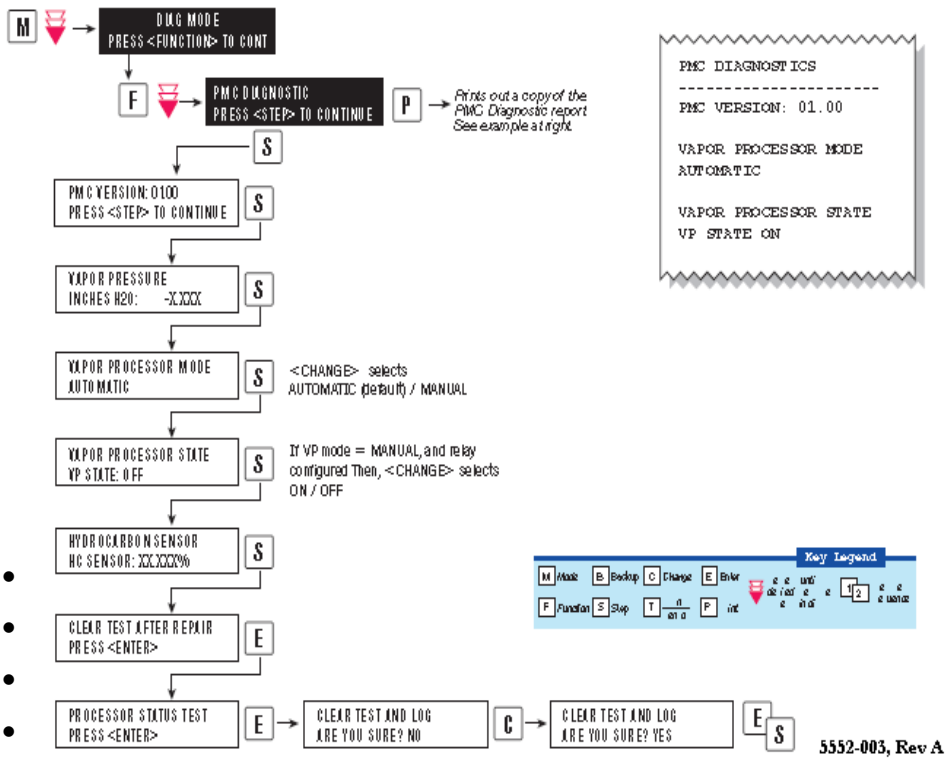


*Figure 12: PMC Diagnostic Menu with PMC Software*

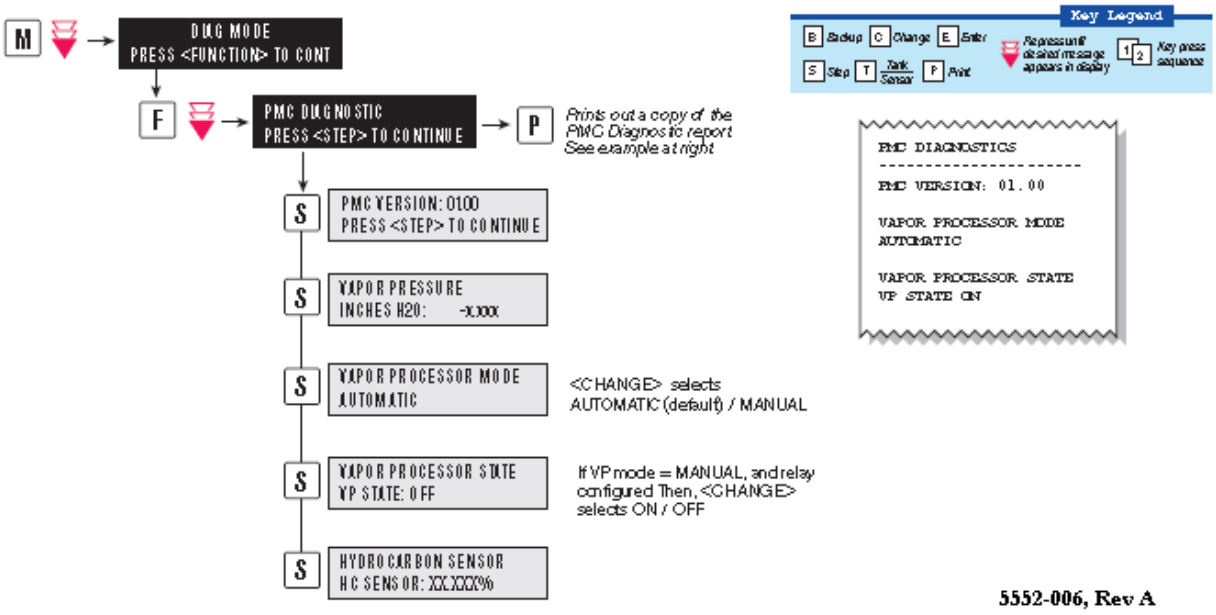


*Figure 13: PMC Diagnostic with ISD Software*

## 3.4 Electrical Connection Test

- Put the TLS-350 in the Manual OFF as shown in the Diagnostic Menus (see Figure 12: Page 15-39 or Figure 13: Page 15-40).

- Check all electrical and control connections prior to applying power to the *Processor*.

- Make sure that all connections have been made to the proper terminals and that all connections are tight.
  - ► In the electrical room:
    - HC Sentry 24VDC (output) / 115V power
    - Fused disconnects
    - Panel breaker wiring connections
    - Starter
    - TLS 4-relay module
    - HC Sentry Interface Cable
  - ► At the ECS:
    - Blower motor
    - Vacuum pump motor
    - Heat trace cable
    - HC sensor
    - All equipment grounds

**CAUTION**

Always obtain approval from the local authority having jurisdiction.

Installation of the *Processor* must comply with (if applicable):

- CARB CP-201
- VST EVR E.O.
- Fire Marshall
- Water Board
- Local Air Pollution District
- ICC
- NEC
- NFPA 30 and 30A
- UL
- Any other applicable federal, state, and local codes

## 3.5 Motor-Rotation Test

- The purpose of this test is to insure that the motors are rotating in the correct direction.

- Turn the power OFF at the disconnect switch located near the Processor.

- Put the *Processor* in the manual ON Mode at the TLS as shown in the diagnostic menu in see Figure 12: Page 15-39 or Figure 13: Page 15-40.

  - ► Remove the cover from the *Processor*.

- Bump the power (briefly energize) the power at the disconnect switch.

  - ► Visually check the motor rotation for the vacuum pump and blower motors to be sure they are rotating according to the arrows that are shown on the equipment.

  - ► The rotation of the motors can be visually checked by looking at the rotation of the fan located on the end of each motor.

CAUTION: DO NOT RUN THE PUMP(S) FOR ANY EXTENDED PERIOD OF TIME UNTIL THE PROPER ROTATION IS VERIFIED OR YOU COULD CAUSE SERIOUS DAMAGE.

Motor Rotation Test, continued . . .

- If the motors are rotating in the proper direction, put the TLS in the manual OFF mode.
- If either of the motors are not rotating in the correct direction:
  - ► Put the *Processor* in the manual "OFF" Mode at the TLS.
  - ► Follow safety regulations regarding lock-out / tag-out procedures to insure power cannot be turned on to the Processor.
- Three-Phase Motors:
  - ► At the motor junction box at the ECS *Processor*, switch any two of the three power circuits for the motor that is not rotating in the correct direction.
  - ► See Figure 16: Page 15-45 and Figure 17: Page 15-46.
- Single-Phase Motors:
  - ► Check the wiring connection diagrams for the specific motor that is not rotating in the correct rotation and correct as required.
  - ► See Figure 14: Page 15-43 and Figure 15: Page 15-44.
- Remove the lock from the lock-out and apply power to the *Processor*.
- Return the *Processor* to the manual ON Mode at the TLS-350.
- Bump the power (briefly energize) power at the disconnect switch.
- Re-check the equipment for proper rotation.
- Return the *Processor* to the manual OFF mode at the TLS.

*If either motor will not run, refer to the ECS Troubleshooting Guide found on the VST website at: www.vsthose.com.*

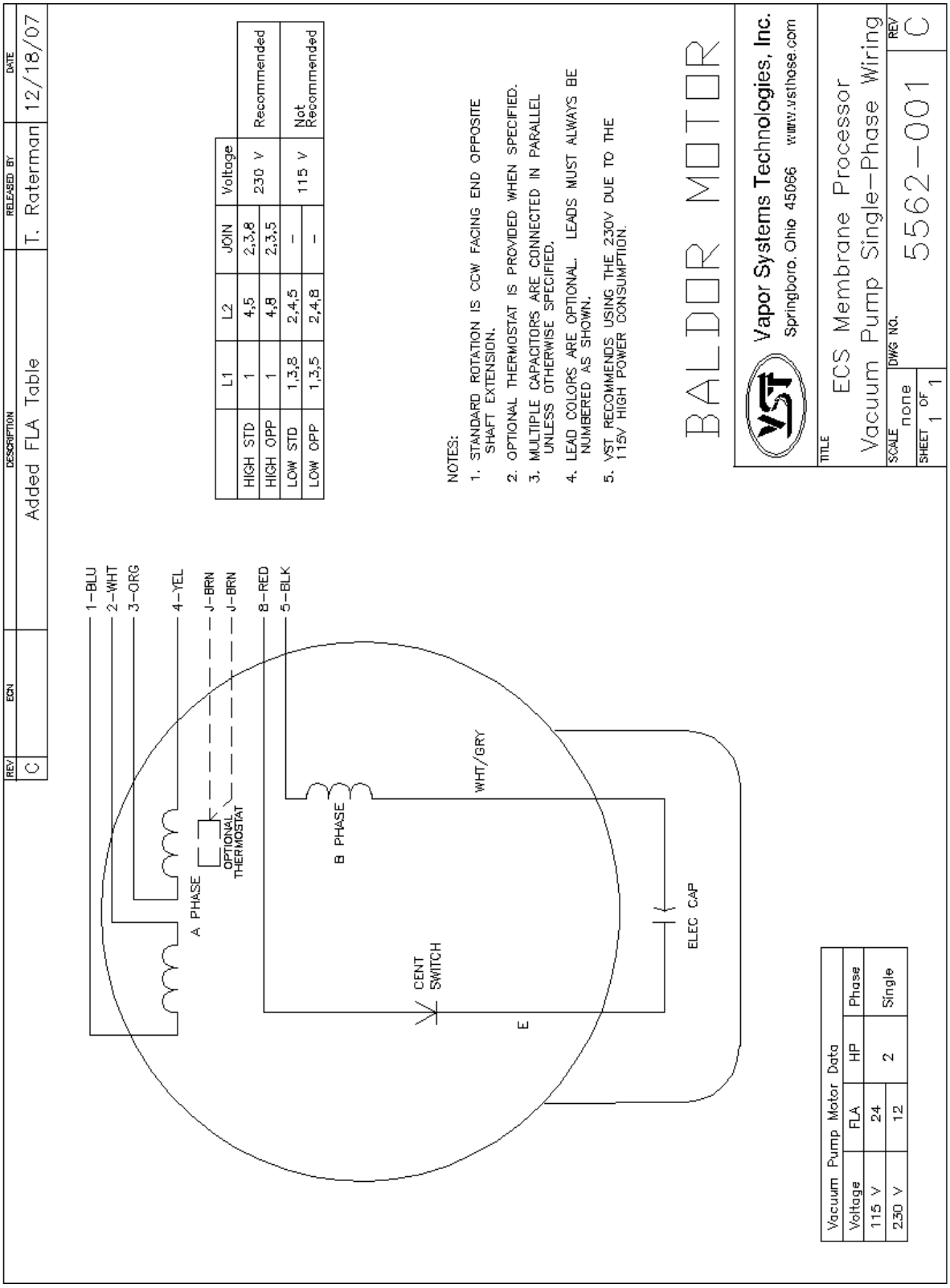


| | L1 | L2 | JOIN | Voltage | |
|---|---|---|---|---|---|
| HIGH STD | 1 | 4,5 | 2,3,8 | 230 V | Recommended |
| HIGH OPP | 1 | 4,8 | 2,3,5 | | |
| LOW STD | 1,3,8 | 2,4,5 | – | 115 V | Not Recommended |
| LOW OPP | 1,3,5 | 2,4,8 | – | | |

| Vacuum Pump Motor Data | | | |
|---|---|---|---|
| Voltage | FLA | HP | Phase |
| 115 V | 24 | 2 | Single |
| 230 V | 12 | | |

*Figure 14: Vacuum Pump: Single-Phase Motor Wiring Diagram*

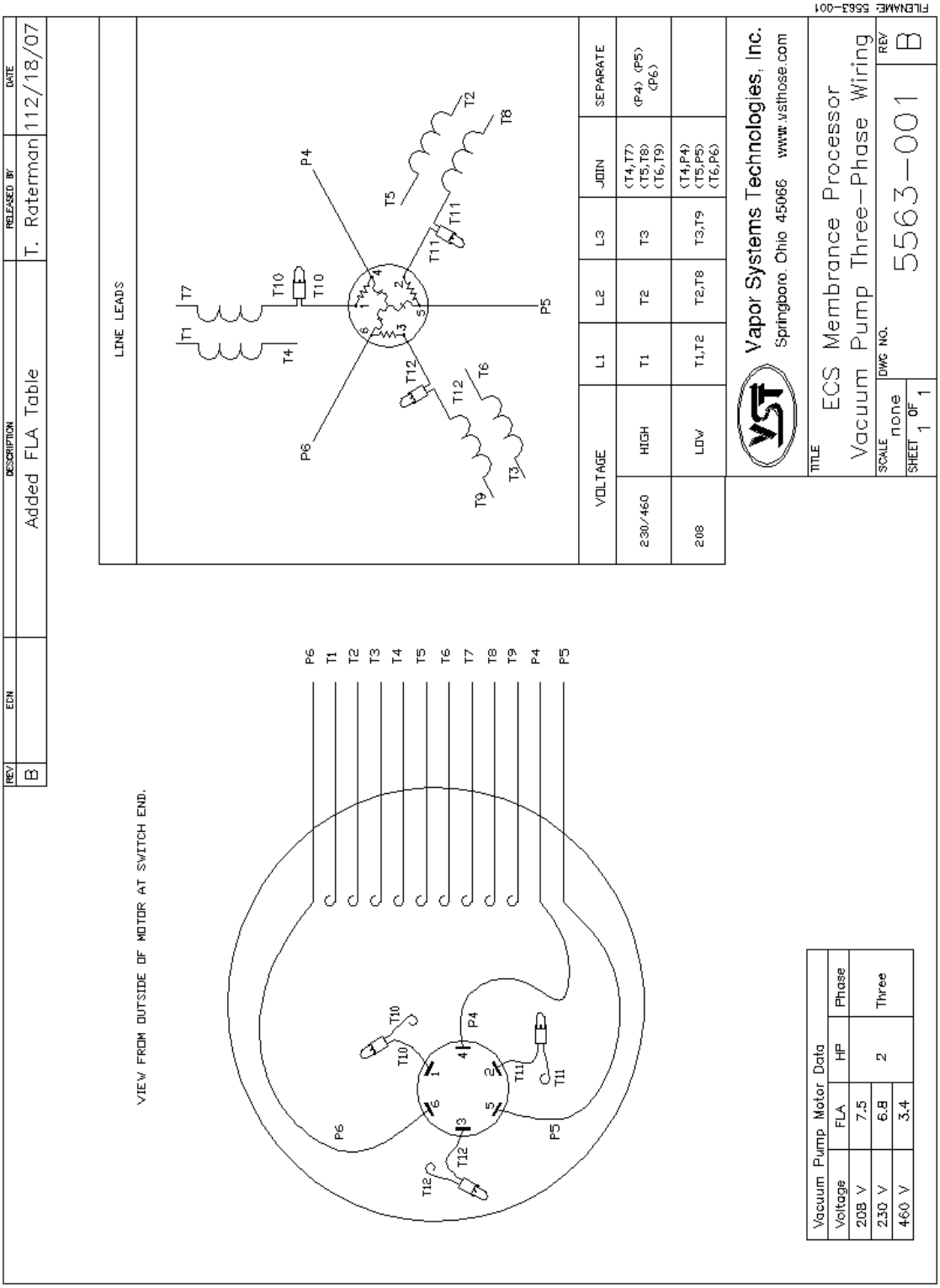


*Figure 15: Vacuum Pump: Three-Phase Motor Wiring Diagram*

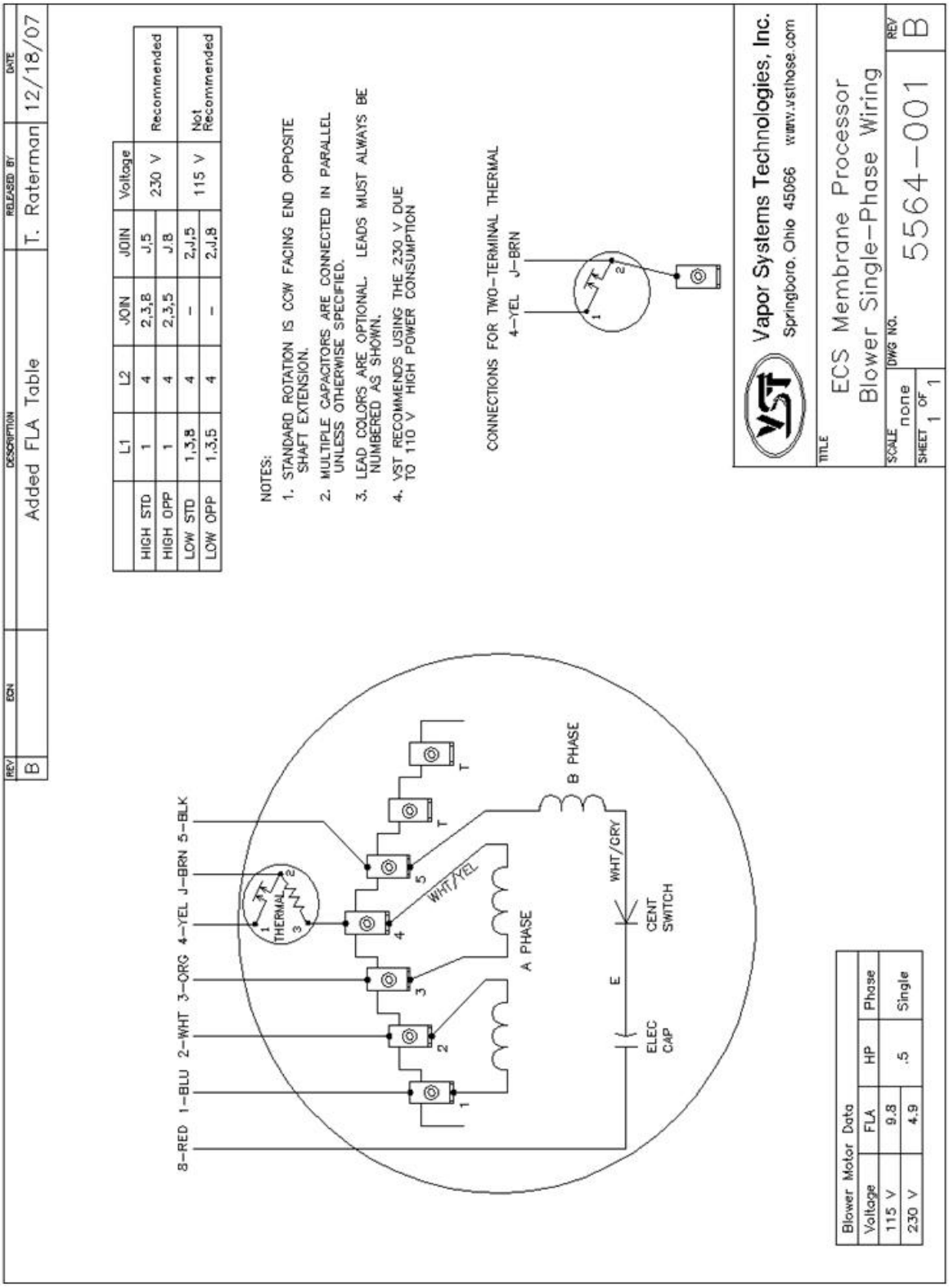


*Figure 16: Blower: Single-Phase Motor Wiring Diagram*

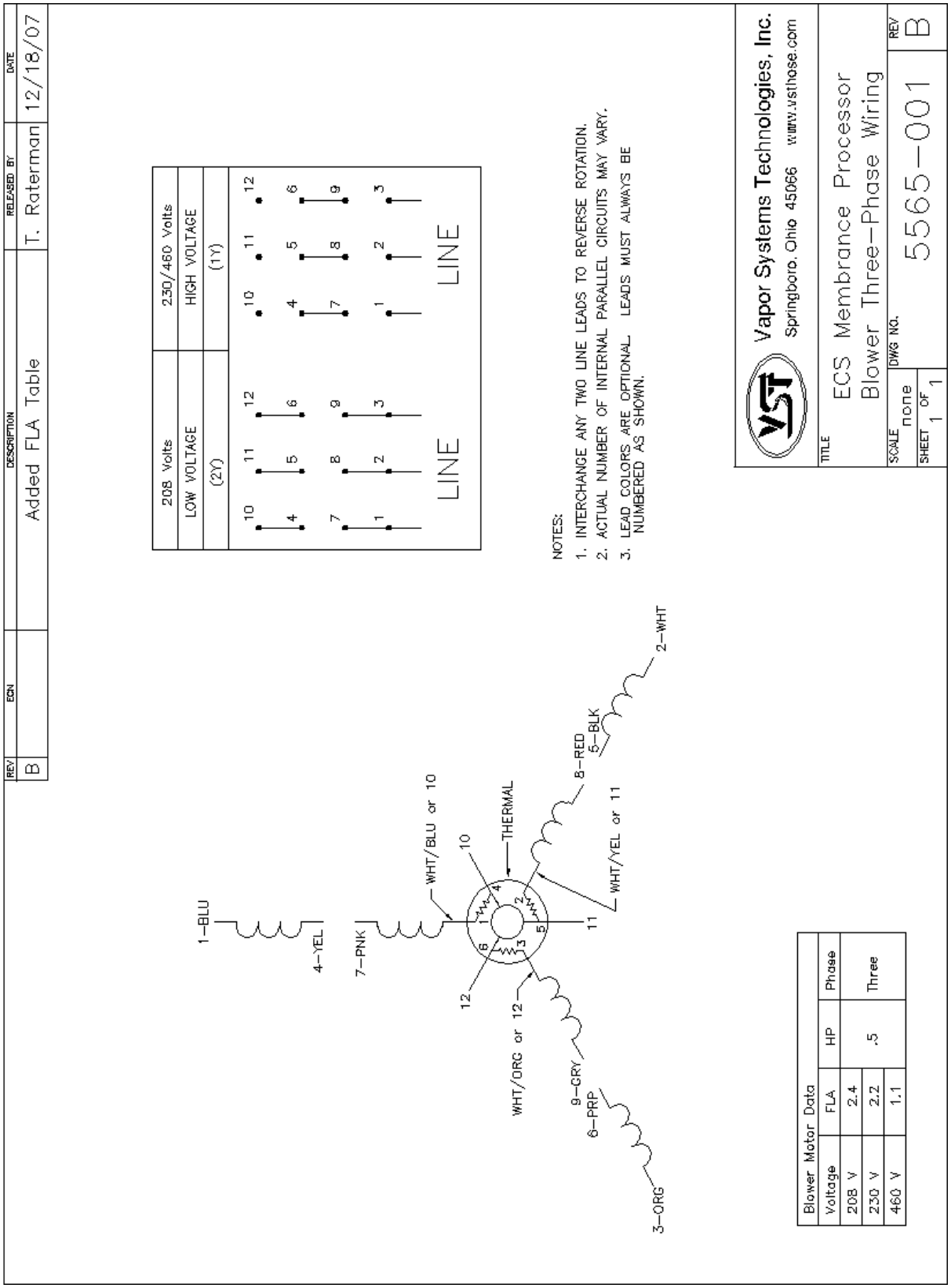


*Figure 17: Blower: Three-Phase Motor Wiring Diagram*

## 3.6 Heat-Trace Continuity Test

The purpose of the Heat Trace Continuity test is to insure there is not a short or damage to the Heat Trace cable. The self-regulating heating cable provides safe and reliable heat tracing for process temperature maintenance.

In electronics, a continuity test is the checking of an electric circuit to see if current flows (that it is in fact a complete circuit). A continuity test is performed by placing a small voltage (wired in series with an LED) across the chosen path. If the electron flow is inhibited by broken conductors, damaged components, or excessive resistance, the circuit is "open." Devices that can be used to perform continuity tests include multimeters or specialized continuity testers.

### 3.6.1 Preparing the heat trace electrical junction box for the test:

- CAUTION: Be sure to use Lockout/Tag-Out procedures when performing work on the *Processor* or while working on electrical components.

1. Put the *Processor* in the manual OFF mode at the TLS-350.
2. Trip the heat trace cable 115v circuit breaker in the electrical panel to remove the power from the heat trace cable.
3. Remove the cover to the *Processor*.
4. Remove the heat trace electrical junction box cover by removing the 4 hold-down screws and lifting the molded plastic cover off the base.

### 3.6.2 Testing the heat trace circuit

1. Using a multimeter or continuity tester, check the continuity (current flow) across the heat trace circuit as shown in Figure 18: Page 15-47.
2. Verify the circuit is complete between the positive terminal the neutral at the three-position terminal block.
3. If the red light does not come on, the heat trace circuit is open. (If electron flow is inhibited by broken conductors, damaged components, or excessive resistance, the circuit is “open.):
    a) Check that all wiring connections are correct.
    b) Repair/replace the heat trace cable as required to correct the problem.
4. Replace the cover on the heat trace electrical junction box using the 4-hold down screws.
5. Replace the cover on the Processor.
6. The Processor can now be put back in the Automatic Mode at the TLS-350 provided all work is completed.

*Figure 18: Heat Trace Circuit Test*

## 3.7 HC Sensor and HC Sentry Power Test

- The purpose of this test is to insure there is 24VDC power to the HC sensor and the HC Sentry module.

### 3.7.1 Checking 24 VDC Power to the HC Sensor

- The 24VDC power to the HC sensor is from the HC Sentry Module.
- Using the multimeter, check the + to Gnd connection on the HC Sentry.
- If there is no 24VDC power, check power to the HC Sentry module.
- If the unit does not function properly,
  see the ECS Troubleshooting Guide
  found on the VST website at www.vsthose.com.

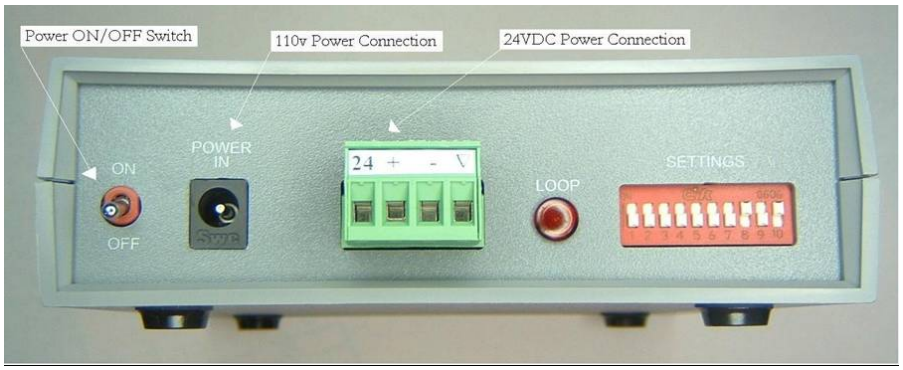


*Figure 19: HC Sentry Interface Module Front View: Power and ON/OFF Switch*

### 3.7.2 Checking 24VDC Power to the HC Sentry Module

- The HC Sentry is powered from a 115V outlet and uses a 115v/24VDC power converter, which is VST supplied.
- Check that the unit is ON.
- Check that the Power Light is ON.
- If the power light is not ON when the unit is ON:
  - ► Check to make sure there is 115v power to the outlet.
  - ► Check the ON switch on the HC Sentry module.
  - ► Check that the 115v/24VDC power converter is functioning.
  - ► If the unit does not function properly, see the ECS Troubleshooting Guide at www.vsthose.com.

*Figure 20: HC Sentry Interface Module Back View: Power "ON" Light*

## 3.8 Processor Leak Test

- The purpose of this test is to check the *Processor* fittings for leakage after the tubing has been disrupted for *Processor* repair.
- Conduct this test with the TLS-350 in the Manual "OFF" Mode, as shown in Figure 12: Page 15-39 or Figure 13: Page 15-40.
- Turn OFF power to the *Processor* motors.
- Make sure the three valves at the *Processor* are closed.
  - ► All tubing fittings are a special UL approved flare-fitting and designed for gasoline- vapor applications.For a leak-proof connection, these fittings are made to be repeatedly disassembled and reassembled.

### 3.8.1 Tools needed to conduct the Processor Leak Test:

- See Figure 21: Page 15-50.
- There are three 2" NPT pipe connections on the *Processor*.
- Install the 2" NPT plug with the Leak Test Fixture attached to the empty 2" pipe connection at the *Processor*.
- Attach the compressed nitrogen to the test fixture.

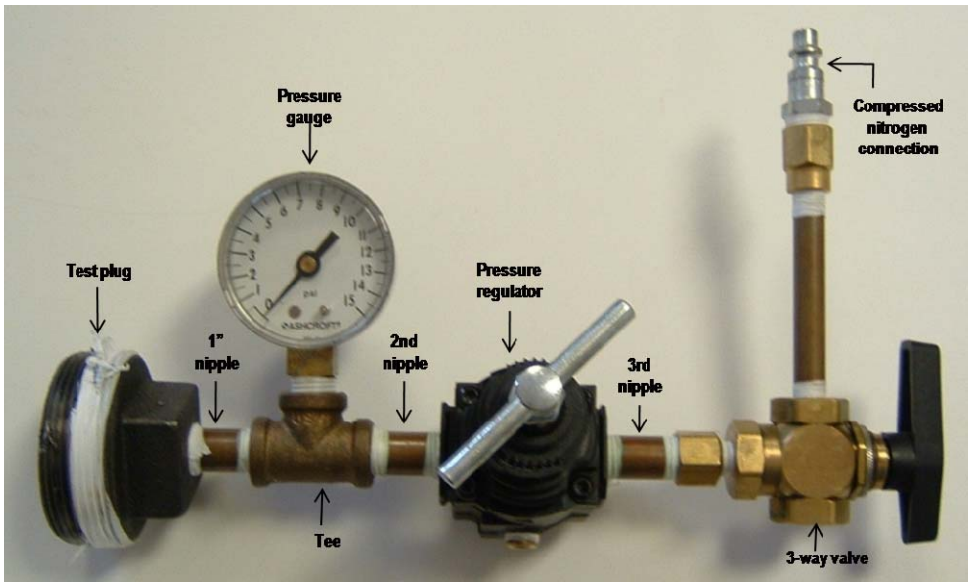


*Figure 21: Typical Leak Check Test Fixture*

### 3.8.2 Conducting the Leak Test

- The Leak Check is conducted with 1.0 to 2.0 PSI using compressed nitrogen.
- Slowly pressurize the *Processor* to a maximum of 2.0 PSI compressed nitrogen.

CAUTION: DO NOT EXCEED 5.0 PSI. DAMAGE TO THE *PROCESSOR* O-RINGS AND/OR PUMP SEALS MAY RESULT, WHICH WILL VOID ALL WARRANTIES ON THE *PROCESSOR*.

- With the *Processor* pressurized to 1.0 to 2.0 PSI using compressed nitrogen, spray a soapy solution on each fitting to check for bubbles:
  - ► If bubbles do not appear, the connection is tight.
  - ► If bubbles do appear, tighten the leaking fitting 1/8" turn and re-check for leaks.
- If the fitting cannot be tightened so the connection is leak free, replace the 45 ° flare tube assembly that is leaking with a new tube assembly.
- Continue this process until all the internal tube fittings have been checked and found leak free.
- Remove the compressed nitrogen connection to the *Processor*.
- Once this test is complete, remove the 2" NPT plugs and the Leak Test Fixture previously installed.
- Remove the remaining two 2" plugs previously installed under this test procedure.
- Keep the TLS-350 in the Manual OFF Mode.
- Turn ON the power to the motors at the electrical panel.

## 3.9 Preparing the Processor for Field Operation

### 3.9.1 Setting the TLS-350 Threshold Values

- Although the threshold values are in the Veeder-Root posting reports, the Veeder-Root PMC and ISD manuals do not address changing the initial "Default" values to match the defaults that are prescribed in VST Executive Orders VR-203 and VR-204.

- In the PMC Set Up menu verify / set the TLS-350 to the following values:

| IN THE PMC SET UP MENU | Software | Description | Default | Threshold Values |
|---|---|---|---|---|
| | PMC / ISD | Vapor Processor Max. Run-Time | 60 minutes | 30 minutes |
| | PMC / ISD | Over Pressure Limit | 0.0"WC | 1.0"WC |
| | PMC / ISD | Analysis time | 0.0 | 11:59 PM. |
| | PMC / ISD | Turn off vapor processor threshold | -0.2"WC | NO CHANGE |
| | PMC / ISD | Turn on vapor processor threshold | +0.2"WC | NO CHANGE |
| | PMC Only | Duty cycle limit | 75% | NO CHANGE |
| | PMC / ISD | All the other associated threshold values are pre-set from the factory. | | |

- <u>CAUTION: These values MUST be set prior to putting the TLS-350 into the AUTOMATIC MODE</u>.

### 3.9.2 Processor Configuration Prior to Start Up

- After all the post-installation power-up tests are complete:
- Replace the plugs on the 3 tees located on the inlet and the outlet of the *Processor* and tighten.
- Lock in the open position the 3 valves located on the inlet and the outlet of the *Processor.*
- Leave the *Processor* in the manual "OFF" mode at the TLS 350.
- See Figure 12: Page 15-39 or Figure 13: Page 15-40.
- Complete the Post-Installation Power-Up checklist form (found on the next page of this document).

## 3.10 Post-Installation Power-Up Checklist

| Post-Installation Power-Up Checklist Form | | | | | Attach product sticker with bar code here |
|---|---|---|---|---|---|
| VST-ASC #: | Date: | | | | |
| ASC Name: | | | | | |
| VST-ASC Certification Level | ❑ A ❑ B ❑ C | | | | |
| ASC Company: | | | | | |
| GDF Name: | | | | | |
| Address: | | | | | |
| City: | | State: | Zip Code: | | |
| GDF Contact Person Name: | | | | | |
| GDF Contact Person Title: | | | | | |
| GDF Contact Person Phone: | | E-mail: | | | |

**Notes:** Use this form to note details of the note details of the power-up process

| **Checkpoints** ECS *Processor* Components | Passed | Failed | Repaired | Replaced | Action Items if Required |
|---|---|---|---|---|---|
| All electrical connections checked | ❑ | ❑ | ❑ | ❑ | |
| Blower motor rotation checked | ❑ | ❑ | ❑ | ❑ | |
| Vacuum pump motor rotation checked | ❑ | ❑ | ❑ | ❑ | |
| Heat-trace continuity checked | ❑ | ❑ | ❑ | ❑ | |
| HC sentry power checked | ❑ | ❑ | ❑ | ❑ | |
| HC sensor power checked | ❑ | ❑ | ❑ | ❑ | |
| Set threshold values | ❑ | ❑ | ❑ | ❑ | |

The above post-installation power-up tests were performed in accordance with IOM found in the VST's Executive Orders.

ASC Signature

# 4 Processor Start-Up

- Use the following start-up procedure:

  ► When initially starting the *Processor* or

  ► When re-starting the *Processor* following maintenance or testing.

| | START-UP PROCEDURE |
|---|---|
| 1. | • Make sure the plugs are installed on the 3 tees at the *Processor*. |
| 2. | • Make sure all 3 valves are locked in the OPEN position at the *Processor*. |
| 3. | • Make sure power is on to the:<br>▪ Heat-trace cable<br>▪ HC sentry<br>▪ HC sensor<br>▪ ECS vacuum pump<br>▪ ECS recirculation blower |
| 4. | • Make sure the pressure sensor is operational. |
| 5. | • Make sure that the GDF is vapor tight. (TP 201.3 and Exhibit 4) |
| 6. | • After the TLS is installed and configured and all EVR equipment has been installed, the *Processor* can become operational.<br>• Put the TLS in the **AUTOMATIC MODE**.<br>• If the pressure is above +0.2" WC, the *Processor* will start and the auxiliary relays will close.<br>• If the pressure is below +0.2" WC, the *Processor* will not start because the UST system-pressure is below the high-pressure threshold. |
| NOTE: All exhibits can be found in Executive Orders VR-203 and VR-204. VR-203 is for those systems using PMC. VR-204 is for those systems using ISD. | |

CAUTION:

Locking ball valve handles at the *Processor* inlet and outlet must <u>not</u> be removed.

## 4.1 Processor Shut-Down Procedure

CAUTION: POWER TO THE HC SENSOR AND THE HEAT TRACE CABLE MUST BE TURNED OFF INDIVIDUALLY FROM DIFFERENT POWER SOURCES. THEY DO NOT RECEIVE THEIR POWER FROM THE SAME SOURCE AS THE MOTORS.

### 4.1.1 Processor Shut-Down Procedure

- The *Processor* must be SHUT DOWN for all testing and maintenance.
- The only exception is for the "Determination of VST Processor Activation Pressure Test."
- To turn the *Processor* OFF:
  a) Through the front panel of the TLC console, access the PMC menu.
  b) Select *Processor* MANUAL mode.
  c) Verify that the status is OFF.
  d) Remove power to the *Processor* by either turning OFF the breaker or by disconnecting power at the *Processor*.
- To return the *Processor* to the AUTOMATIC mode:
  a) Through the front panel of the TLS console, access the PMC menu.
  a) Select *Processor* AUTOMATIC mode.
  b) Turn the power ON to the *Processor*.

### 4.1.2 HC Sensor and HC Sentry Module

- The 115VAC/24 VDC power supply for the HC Sentry Module / HC sensor can be unplugged, which will remove power to the HC Sensor in the *Processor*.

### 4.1.3 Heat-Trace Cable

- The heat trace cable should not be turned OFF unless maintenance is performed in an area that could cause electrical shock.
- Turn OFF power to the heat-trace cable from the 115v electrical-panel breaker.

# 5 Processor Maintenance

- The VST Emissions Control System consists of only two components having moving parts: a blower and a vacuum pump, which do not have any scheduled maintenance for 10 years.

- The remaining components are tested, but they require maintenance only if they fail their tests:
  - ► Heat trace cable
  - ► HC sensor
  - ► HC Sentry module

- Because the system continually monitors itself and notifies you of any problems or situations, it requires very little attention.

- The table on the following page outlines the required annual inspections and tests.
  - ► Preventative Maintenance Checklist Form
  - ► GDF Maintenance Records

## 5.1 Annual System Compliance Testing

| Annual System Compliance Testing | |
|---|---|
| Static Pressure Test: | TP-201.3<br>Exhibit 4 |
| Dynamic Back Pressure Test: | TP-201.4 |
| Liquid Removal Test Procedure: | Exhibit 5 |
| Hydrocarbon Sensor Verification Test: | Exhibit 6 |
| Vapor Pressure Sensor Verification Test: | Exhibit 8 |
| VST *Processor* Activation Test: | Exhibit 9 |
| Nozzle Bag Test Procedure: | Exhibit 10 |
| ISD Operability Test:<br>(Flow Meter Operability Test) | Exhibit 11 |
| NOTE: All exhibits can be found in Executive Orders VR-203 and VR-204. VR-203 is for those systems using PMC. VR-204 is for those systems using ISD. | |

## 5.2 Annual Inspections and Replacements

| Annual *Processor* Inspections and Replacements | | | | | |
|---|---|---|---|---|---|
| Component | Procedure | Fail Criteria | Corrective Action | Reference Manuals | Authorized Personnel |
| Blower | Replace the blower every ten years or 15,000 hrs. (whichever comes first). | | | IOM – 15 Found in Executive Orders VR-203 and VR-204 | VST ASC Level C |
| Vacuum pump | Replace blower every ten years or 15,000 hrs. (whichever comes first). | | | | |
| Vacuum pump drive coupling - rubber insert | Visually inspect the drive coupling between the vacuum pump and the motor for wear | Rubber debris is found on or around the vacuum-pump base. | Replace the drive coupling rubber insert | IOM – 15 Found in Executive Orders VR-203 and VR-204 | |
| Heat Trace Cable | Check the continuity of the heat trace cable. | If the heat trace cable circuit is open, the cable has failed. | Replace the heat- trace cable | IOM – 15 Found in Executive Orders VR-203 and VR-204 | |
| HC Sensor | Test the HC sensor | The difference shall be within ±1.0% HC concentration from the calibration gas concentration.<br><br>Record “Pass” if within ±1.0% or “Fail” if not within ±1.0%. | Replace the HC Sensor | IOM – 15 and Exhibit 6 Found in Executive Orders VR-203 and VR-204 | |

## 5.3 Preventative Maintenance Checklist Form

| Component | Frequency | Date Inspected | Completed | Required Action Items |
|---|---|---|---|---|
| *PROCESSOR* | Yearly | | | |
| • Inspect drive coupling on the vacuum pump. | | | [ ] | |
| • Check the continuity of the heat trace cable. | | | [ ] | |
| RECIRCULATION BLOWER | | | | |
| Replace every 10 years or 15,000 hours, whichever comes first. | | | [ ] | |
| VACUUM PUMP | | | | |
| Replace every 10 years or 15,000 hours, whichever comes first. | | | [ ] | |

## 5.4 GDF Maintenance Record

| Date of Maintenance/ Test/Inspection/Failure (including date and time of maintenance call) | Repair date to correct test failure | Maintenance/Test/Inspection Performed and Outcome | Affiliation | Name and Technician ID Number of Individual Conducing Maintenance or Test | Telephone Number |
|---|---|---|---|---|---|
| | | | | | |
| | | | | | |
| | | | | | |
| | | | | | |
| | | | | | |
| | | | | | |
| | | | | | |
| | | | | | |
| | | | | | |
| | | | | | |

# *Component Replacement*

## 6 Blower Replacement

### 6.1 Blower Replacement Safety

Use lockout / tagout procedures prior to starting work.

### 6.2 Removing the Blower

1. Put the TLS 350 in the manual "OFF" mode.
   - See Figure 12: Page 15-39 or Figure 13: Page 15-40.

2. Disconnect power to the blower and vacuum pump motors. Do this at both the breaker and at the disconnect switch. The disconnect switch is located near the *Processor*.

3. Close the ball valves between the *Processor* and the vents.

4. Completely remove the two blower ¾" - 45° flare inlet and out tubes.
   - See Figure 23: Page 15-63.
   - NOTE: The nuts on the tubing are ¾" 45º flare, use caution not to damage the flared ends on the tubing or the threads on the nuts after removal.

5. Remove the two 45º flare inlet and outlet connection fittings from the blower.

6. Disconnect and remove the blower electrical from the motor.
   - See Figure 22: Page 15-63.

7. Remove (4) ¼" x ¾" mounting bolts.
   - The 4 holes in the blower stand are tapped 1/4".
   - Keep the (4) ¼" bolts for reuse or replace them with new ones.
   - CAUTION: The blower end of the blower/motor assembly is heavier than the motor end, which may cause the blower to fall off the stand. USE CAUTION when removing the bolts.

8. Remove the blower from the stand.

## 6.3 Installing the New Blower

1. Place the new blower on the blower stand.
2. Install and hand tighten the (4) ¼" x ¾" blower mounting bolts.
3. Install the two 45º flare inlet and outlet connection fittings into the blower.
4. Install the ¾" inlet and outlet tubing.
    - Do not use any thread-sealing compound when assembling the 45º flare nuts.
    - NOTE: When tightening the 45° flare nuts: Clamp the tube flare between nut and nose body of the tube by screwing the nut on finger tight. Tighten with a wrench an additional ¼ turn for a metal-to-metal seal.
5. After the tubing is installed and the 45° flare nuts tightened, tighten the (4) mounting bolts.
6. Reconnect the electrical power wires to the blower motor.
7. Remove the lock(s) and tags from the lockout & tagout.
8. Conduct a *Processor* Leak Check – see Section 3.8: Page 15-50 of this manual.
9. Open the ball valves between the Processor and the vent risers.
10. Turn ON power to the blower and vacuum pump at the breaker.
11. Put the TLS-350 in the manual ON mode.
12. Bump the power (briefly energize) the power at the disconnect switch.
13. Check the rotation of the blower motor.
14. Engage the disconnect switch.
15. After work is completed, put the TLS-350 in the AUTOMATIC mode.

    See Figure 12: Page 15-39 or Figure 13: Page 15-40.

*Figure 22: Blower electrical connection conduit*

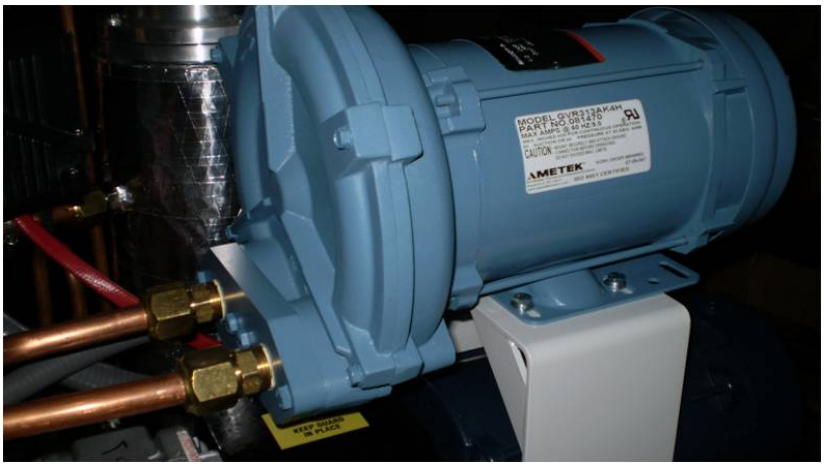


*Figure 23: Blower inlet and outlet tubing connections and mounting bolts*

# 7 Vacuum Pump Replacement

## 7.1 Safety

Use lockout / tagout procedures prior to starting work.

## 7.2 Removing the Vacuum Pump

1. Put the TLS 350 in the manual "OFF" mode.
   - See Figure 12: Page 15-39 or Figure 13: Page 15-40.

2. Disconnect power to the blower and vacuum pump motors. Do this at both the breaker and at the disconnect switch. The disconnect switch is located near the *Processor*.

3. Close the ball valves between the Processor and the vent risers.
   - NOTE: Before you begin disassembling, note that the vacuum pump and the motor are attached to a common base plate.

4. Completely remove the vacuum pump ½" outlet tubing.
   - **See** Figure 24: Page 15-66.

5. Completely remove the vacuum pump ½" and ¼" inlet 45º flare tubing and all pipe fittings connected to the vacuum pump.
   - **See** Figure 25: Page 15-66.

6. Completely remove the ¼" HC sensor inlet tubing at the air outlet and the HC sensor.
   - **See** Figure 26: Page 15-67 and Figure 27: Page 15-67.
   - NOTE: The tube ends are a Parker 45º flare, use caution not to damage the flared ends on the tubing or the threads on the nuts after removal.

7. Disconnect and remove the vacuum pump electrical from the motor.

8. Remove (4) ¼" x 1-½" mounting bolts from the vacuum pump motor assembly base plate.
   - Note: The vacuum pump and motor will stay connected to the base plate.
   - Keep the (4) bolts for reuse or replace with new.

9. Slide the vacuum pump out from under the blower stand.

## 7.3 Installing the new Vacuum Pump and Vacuum Pump Motor Assembly

1. Slide the new vacuum pump under the blower stand and align the mounting holes.
2. Install the (4) ¼" x 1-½" vacuum pump base mounting bolts.
3. Tighten the mounting bolts so that the bottom of the vacuum pump base is ⅛" from the ECS base.
4. Re-install the ½" and ¼" inlet 45° flare tubing and all pipe fittings connected to the vacuum pump.
5. Re-install the ½" outlet tubing.
6. Re-install the ¼" HC sensor inlet tubing.
   Do not use any thread sealing compound when assembling the 45 º flare nuts.

NOTE: When tightening the 45° flare nuts: Clamp the tube flare between nut and nose body of the tube by screwing the nut on finger tight. Tighten with a wrench an additional ¼ turn for a metal-to-metal seal.

7. Reconnect the electrical power wires to the vacuum pump motor.
8. Conduct a Processor Leak Check – see Section 3.8: Page 15-50 of this document.
9. Open the ball valves between the *Processor* and the vent risers.
10. Remove the lock(s) and tags from the lockout & tagout.
11. Turn ON power to the blower and vacuum pump at the breaker, but not at the disconnect switch.
12. Turn the Processor to the MANUAL ON mode.
13. Bump the power (briefly energize) the disconnect switch.
14. Check rotation of vacuum pump motor.
15. After work is completed, put the TLS-350 in the AUTOMATIC mode.

    See Figure 12: Page 15-39 or Figure 13: Page 15-40.

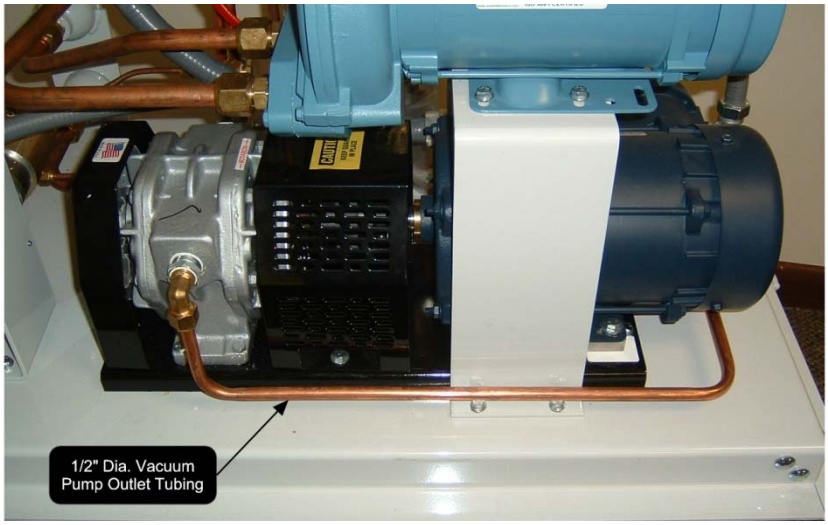


*Figure 24: Vacuum pump outlet tubing connection*

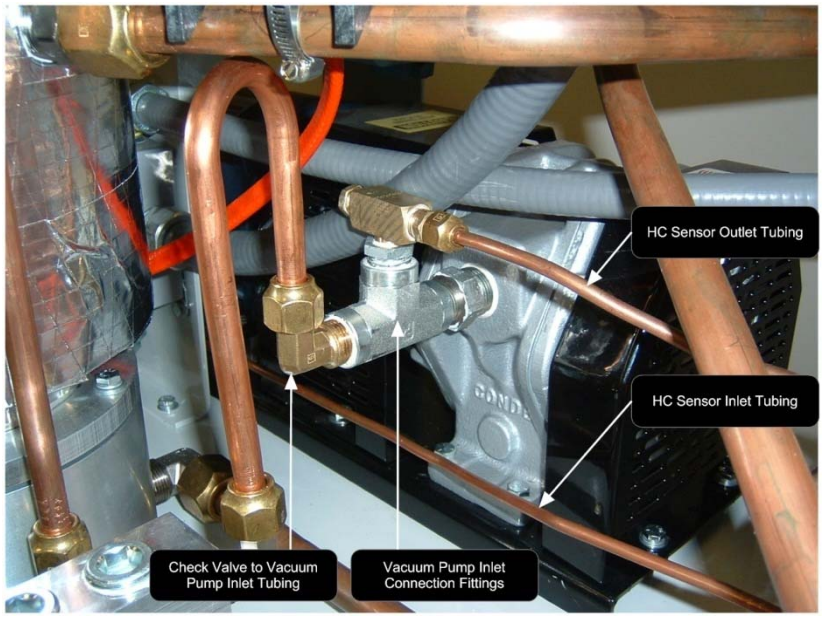


*Figure 25: Vacuum pump inlet tubing and fittings*

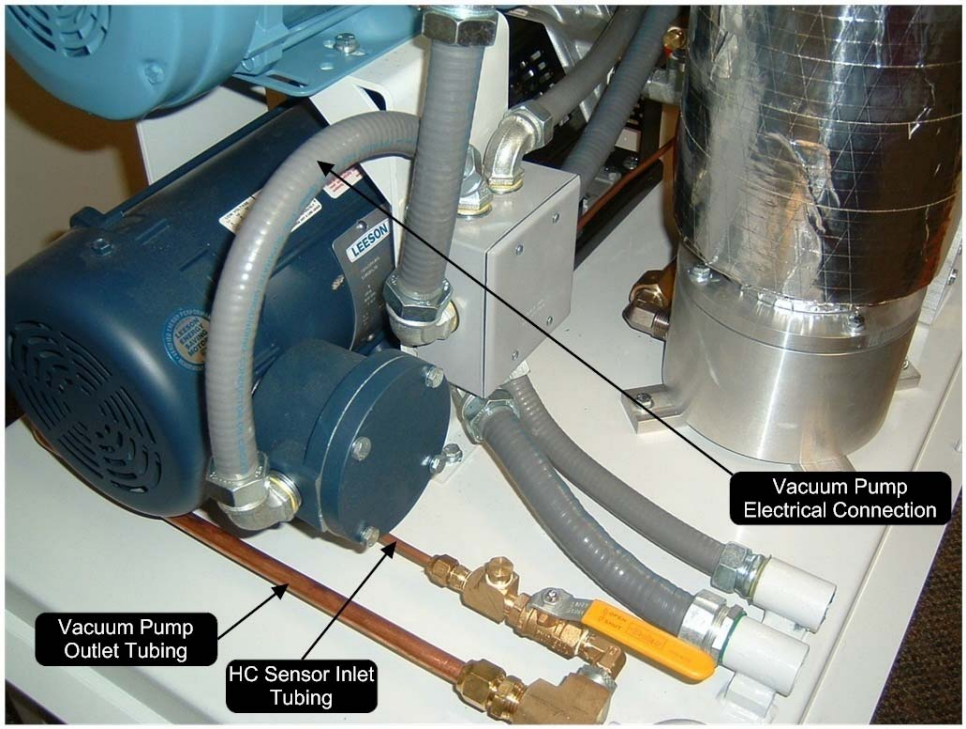


*Figure 26: Vacuum pump electrical connection / vacuum pump outlet tubing / HC sensor inlet tubing*

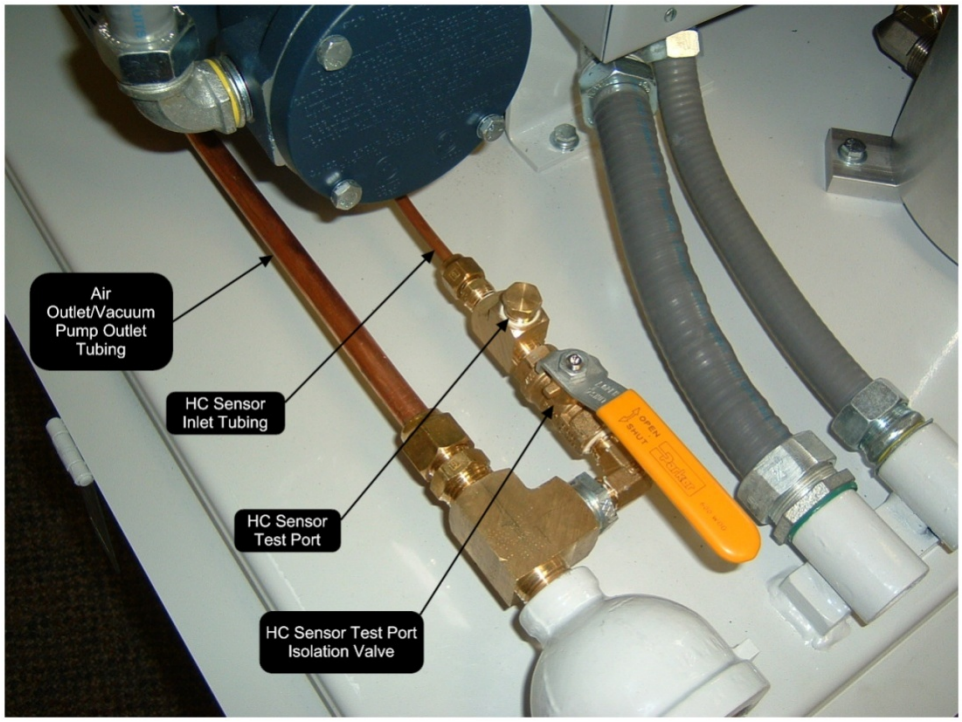


*Figure 27: Air outlet / vacuum pump outlet / HC sensor inlet tubing*

# 8 Membrane Replacement

## 8.1 Safety

Use lockout / tagout procedures prior to starting work.

## 8.2 Removing the Membrane from the Membrane Housing

1. Put the TLS 350 in the manual "OFF" mode. See Figure 12: Page 15-39 or Figure 13: Page 15-40.

2. At the breaker and at the disconnect switch, disconnect power to the heat trace cable, the vacuum pump, and the blower.

3. Close the ball valves between the *Processor* and the vent risers.

4. Disconnect and remove the ½" 45º flare tubing from the top and side of the membrane housing: See Figure 28: Page 15-68.

   NOTE: The nuts on the tubing are ¾" 45° flare. Use caution not to damage the flared ends on the tubing or the threads on the nuts after removal.

5. Remove the (4) ¼" bolts from the top plate (on top of the membrane housing).

6. Keep the (4) bolts/washers/lock washers for reuse.

7. Remove the top plate. A small lever may have to be used to gently pry the top plate off the membrane housing.

   The top plate seals against the vertical tube with an o-ring. Use caution when removing the top plate. The membrane is now exposed.

   See Figure 29: Page 15-68.

*Figure 28: Membrane Housing*

*Figure 29: Exposed membrane with top plate removed.*

Continued next page . . .

8. Gently screw the membrane extraction tool into the top of the membrane.
   Screw the extraction tool into the membrane until the threads bottom out.
   See Figure 30: Page 15-69.

CAUTION: Do not over tighten the extraction tool when screwing into the membrane.

*Figure 30: Membrane extraction tool*

9. Gently move the extraction tool side-to-side while pulling up with moderate force until the membrane becomes loose.

   CAUTION: Do not use excessive force or a twisting action to remove the membrane as these items may cause damage to the membrane epoxy potting.

   There are two o-rings on the inside bottom of the vertical tube causing resistance in removing the membrane

   An aluminum insert (Figure 31: Page 15-69) may still be attached to the bottom of the membrane or will stay in the membrane-housing base.

   DO NOT LOSE THE INSERT AS IT WILL BE NEEDED TO COMPLETE THE MEMBRANE INSTALLATION AND MAKE THE MEMBRANE OPERATION FUNCTIONAL.

*Figure 31: Membrane base insert*

10. Remove the extraction tool from the membrane.

11. Remove and discard the (4) o-rings:

    (2) O-rings on the membrane

    (2) O-rings on the base insert

    Keep the vertical tube top o-ring for re-use.

## 8.3 Installing the New Membrane

1. Install (4) new O-rings:
   (2) O-rings on the membrane (VST Part #5006-012).
   (2) O-rings on the base insert (VST Part #5006-013).

2. Use only silicon grease (not hydrocarbon-based grease) on the o-rings prior to installation.

   Hydrocarbon-based grease or lubricant will emit hydrocarbon vapors, which will be measured by the HC sensor and will cause inaccurate gas-level readings.

3. With (2) new o-rings on the "insert" installed, place the "insert" into the bottom of the base as orientated in Figure 31: Page 15-69.

4. With the (2) membrane o-rings installed, place the membrane into the membrane housing.
   Apply a moderate downward force with a mild side-to-side action to seat the membrane in the membrane base.

5. Install the existing top vertical tube o-ring (re-lubricated). Install the top plate.
   - The top plate will seat on the vertical tube o-ring while bolting the top plate in place.
   - DO NOT USE FORCE TO SEAT THE TOP PLATE.

6. Install the (4) ¼" bolts/washers/lock washers in the top plate/retaining ring to secure the top plate.

7. Tighten the (4) bolts to 85 in-lbs in a cross-pattern using 20%, 40%, 60%, 80%, 90%, 100% of torque.
   - This cross-pattern torque procedure will evenly seat the top plate to the vertical tube.

8. Re-install the ½" 45° flare tubing from the top/side of the membrane housing.
   - Note: When tightening the 45° flare nuts: Clamp the tube flare between nut and nose body of the tube by screwing the nut on finger tight. Tighten with a wench an additional ¼ turn for a metal-to-metal seal.

9. Perform a *Processor* Leak Test. See Section 3.8: Page 15-50.

10. Open the ball valves between the *Processor* and the vent risers.

11. Remove the lock(s) and tags from the lockout & tagout.

12. Turn ON power to the heat trace, blower, and vacuum pump.

13. After work is completed, put the TLS-350 in the AUTOMATIC mode.
    See Figure 12: Page 15-39 or Figure 13: Page 15-40.

# 9 Drive Coupling Rubber Insert Replacement

- NOTE: The drive coupling rubber insert replacement is done with the vacuum pump and motor assembly still attached to the ECS base.

## 9.1 Safety

Use lockout / tagout procedures prior to starting work.

## 9.2 Removing the Drive Coupling Insert

1. Prior to starting work, put the TLS-350 in the Manual OFF mode.
   - See Figure 12: Page 15-39 or Figure 13: Page 15-40
2. Close the ball valves between the *Processor* and the vent risers.
3. At the disconnect switch and at the breaker, disconnect the power to the blower and vacuum pump motors.
4. With the vacuum pump and motor assembly in-place on the ECS base, remove the drive coupling guard and the pump fan guard.
   - See Figures 32-33 Page 15-71
5. Completely remove the vacuum pump ½" outlet tubing.
   - See Figure 23: Page 15-63.
6. Completely remove the vacuum pump ½" and ¼" inlet 45º flare tubing and all pipe fittings connected to the vacuum pump.
   See Figure 25 Page: 15-66.
7. Completely remove the ¼" HC sensor inlet tubing at the air outlet and the HC sensor.
   - See Figure 49: Page 15-87.
   - NOTE: The tube ends are a Parker 45º flare, use caution not to damage the flared ends on the tubing or the threads on the nuts after removal.

*Figure 33: Vacuum and motor assembly*

*Figure 32: Vacuum pump with guard removed*

Continued next page. . .

8. Un-bolt the vacuum pump from the base and move the vacuum pump away from the motor.
   - Moving the vacuum pump away from the motor will separate the drive coupling for removal of the rubber insert.
   - Be sure to mark and keep any shims used under the vacuum pump for re-use (the shims are used for aligning the vacuum pump with the motor).
   - Keep the bolts for re-use.
   - See Figure 34: Page 15-72.

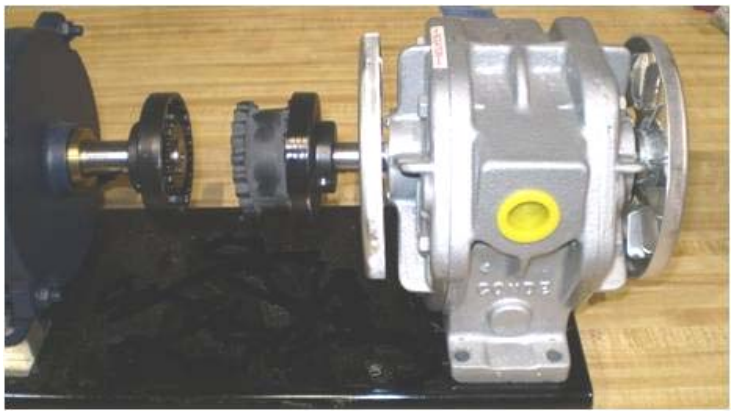

*Figure 34: Vacuum pump unbolted and moved away from the motor*

## 9.3 Installing the Drive Coupling Insert

1. Replace the rubber insert into the drive coupling.
   See Figure 35: Page 15-73.

2. Slide the vacuum pump towards the motor.
   - Place any shims under the vacuum pump in their original location.

3. Bolt the vacuum pump to the vacuum pump base.

4. Install the drive coupling and fan guards.

5. Re-install the ½" and ¼" inlet 45° flare tubing and all pipe fittings connected to the vacuum pump.

6. Re-install the ½" outlet tubing.

7. Re-install the ¼" HC sensor inlet tubing.
   Do not use any thread sealing compound when assembling the 45 ° flare nuts.
   NOTE: When tightening the 45° flare nuts: Clamp the tube flare between nut and nose body of the tube by screwing the nut on finger tight. Tighten with a wrench an additional ¼ turn for a metal-to-metal seal.

8. Perform a *Processor* leak test – see Section 3.8: Page 15-50 of this document.

9. Remove the lock(s) and tags from the lockout & tagout.

10. Open the ball valves between the *Processor* and the vent risers.

11. At the breaker, but not at the disconnect switch, turn ON power to the blower and vacuum pump.

12. Return the TLS-350 to the manual ON mode.

13. Using the disconnect switch near the Processor, briefly cycle the power to verify that there is no excessive vibration at the coupling.

continued next page . . .

15. After work is completed, put the TLS-350 in the AUTOMATIC mode and engage the disconnect. See Figures 12 or 13: Pages 15-39 & 15-40.

*Figure 35: Drive coupling rubber insert*

# 10 Heat Trace Cable Replacement

## 10.1 Safety

Use lockout / tagout procedures prior to starting work.
Disconnect electricity to the *Processor*.

## 10.2 Removing the Heat Trace Electrical Box

1. Prior to starting work, put the TLS-350 in the Manual "OFF" mode
   - See Figure 12 or 13: Pages 15-39 & 15-40.
   - Remove power to the *Processor* by either turning OFF the breaker or by disconnecting power at the *Processor*.

2. At the breaker, disconnect power to the heat trace cable.

3. Remove the entire heat trace electrical box from the ¾" tubing.

4. Disconnect and remove the heat trace cable from inside the electrical junction box.
   - Remove the top cover from the electrical junction box (be sure to keep the screws for reuse).
   - Remove the 115V and ground wires from the terminal block located inside the electrical junction box.
   - See Figure 36: Page 15-76.
   - Remove the bottom plate (be sure to keep the screws for reuse).
   - Pull the heat trace cable out of the electrical box and bottom plate (be sure keep the rubber grommet for reuse).

5. Completely remove the 1" thick F/G insulation from the membrane housing.
   - Cutting on the insulation seam, remove the insulation (with the aluminum tape attached) in one piece and save for reuse.
   - See Figure 37: Page 15-76.

6. Peel the aluminum tape off the heat trace cable and discard.
   - This will expose the heat trace cable and end seal kit.

7. Disassemble the seal kit and remove the heat trace cable.
   - Retain the end seal kit parts for re-use.

## 10.3 Overview for Installing the New Heat Trace Cable

1. VST has found that making both the end seal kit and electrical junction box connection first to the heat trace cable works the best.

2. After both connections are made to the heat trace cable, attach the electrical junction box to the ¾" tube.

3. After the electrical junction box is attached to the ¾" tube, wrap the heat trace cable around the vertical tube starting at the bottom and wrapping towards the top, applying aluminum tape on each revolution.

4. The last step is to secure the end seal kit to the vertical tube.

## 10.4 Steps for Installing the New Heat Trace Cable

1. Install the end seal kit on the heat trace cable:
   - Using a multimeter, check the heat trace cable electrical circuit continuity at the electrical junction box to insure the circuit is complete and is not in a ground fault condition.
   - See Figure 38: Page 15-76. End Seal Kit Components
   - See the Figures 39-40: Pages 15-15 and 15-16. Chromalox End Seal Kit Installation Instruction (2-Pages - ) to install the heat trace cable on the end seal kit
   - Figure 41: Page 15-79. Prepare the New Heat Trace Cable for installation into the End Seal Kit

2. Install the heat trace cable to the electrical junction box.
   - See Figures 42-45: Pages 15-80 through 15-83. Electrical Junction Box Installation Instructions, (4-Pages).

3. Attach the electrical junction box to the ¾" tube (attached to the membrane housing).

4. Wrap the heat trace cable around the vertical tube starting at the bottom and wrapping towards the top, applying aluminum tape on each revolution.
   - Be sure to install the heat trace cable **flat** against the membrane housing – free of twists.
   - Use nylon reinforced aluminum tape.

5. Secure the end seal kit/heat trace cable to the top section of the top section of the vertical tube.
   - See Figure 46: Page 15-84 End Seal Kit Location and Heat Trace Cable Installation.
   - The heat trace cable on the vertical tube should be completely wrapped with aluminum tape. (Note: The nylon reinforced aluminum tape serves two purposes, it holds the heat trace cable in place while installing the heat trace cable on the vertical tube, and it insures the heat trace cable is held firmly in contact with the vertical tube).

6. The installation is now complete.
   - See Figure 47: Page 15-85. Installed Electrical Junction Box with Electrical Connections.

7. Check all electrical connections for loose wires.

Continued next page . . .

8. Remove the lock(s) and tags from the lockout & tagout.

9. Turn ON power to the Heat Trace Cable and vacuum pump.

10. After work is completed, put the TLS-350 in the AUTOMATIC mode.
    - See Figure 12 or 13: Pages 15-39 and 15-40.

*Figure 36: Termination block inside the electrical junction box*

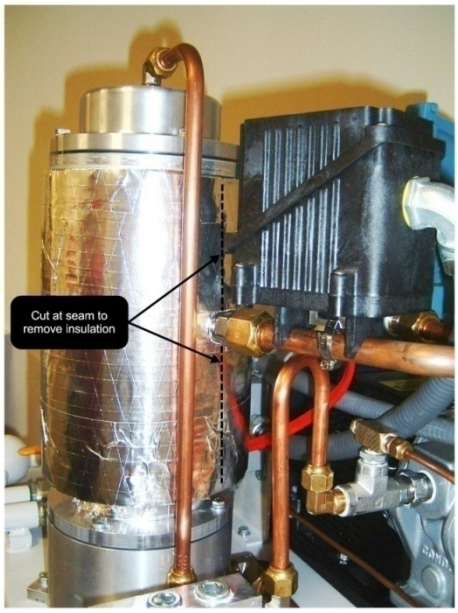


*Figure 37: Seam to cut to remove the insulation*

*Figure 38: End seal kit components*

*Connection screws*
*End cap*
*Grommet*
*Pressure plate*
*Heat trace cable*

Chromalox®

## Installation Instructions

| SERVICE REFERENCE | | |
|---|---|---|
| DIVISION 4 | SECTION RT | |
| SALES REFERENCE | (Supersedes PJ450-9) | PJ450-10 |
| | | 161-562761-001 |
| DATE | MARCH, 2004 | |

# Type RTES End Seal Kit for Self-Regulating and Constant Wattage Rapid-Trace Heating Cable

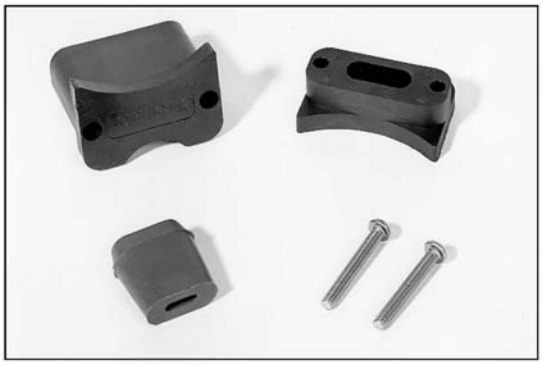

**RTES Kit Parts:**

| | |
|---|---|
| 1 - End Cap | 1 - Pressure Plate |
| 2 - Screws | 1 - Grommet |

## GENERAL

The RTES kit is used for terminating braided (-C) and overcoated (-CR or -CT) versions of Self-Regulating and Fluoropolymer insulated Constant Wattage Rapid-Trace Heating Cable. The cable grommet is furnished with this kit such that the kit suffix number is the same as the grommet number (eg., an RTES-3 kit uses a GR3 grommet). Refer to the list below to insure you have the proper grommet for the cable you are installing.

GR1 for SRL-C
GR2 for SRL-CR or SRL-CT
GR3 for CWM-C
GR4 for CWM-CT
GR5 for SRL-MC
GR6 for SRL-MCR or SRL-MCT
GR7 for SRM/E-C
GR8 for SRM/E-CT

Each kit contains enough material to make one termination. Materials required include: standard electrical cutters, screwdriver and fiberglass tape.

## INSTALLATION

**⚠WARNING**

***ELECTRIC SHOCK HAZARD. Disconnect all power before installing or servicing heating cable and accessories. A qualified person must perform installation and service of heating cable and accessories. Heating cable must be effectively grounded in accordance with the National Electrical Code. Failure to comply can result in personal injury or property damage.***

**Note:** All electrical wiring, including GFCI (Ground Fault Circuit Interrupters), must be done in accordance with the National Electrical Code and local codes by a qualified person.

**Note:** These instructions are for all Self-Regulating and Constant Wattage heating cables in ordinary locations. Consult factory for installation of braided cable in hazardous locations. Not all instructions, are for all cables. Each step has a boldface heading stating what type of cable that instruction is for.

1. **FOR CONSTANT WATTAGE CABLE:**
   Using standard electrical cutters, make a perpendicular cut across the cable four inches from the last module point.

**Note:** Cutting the cable between module points (indentions in cable) creates a non-heated cold lead. See Figure 1.

**Figure 1**

© 2004 Chromalox, Inc.

*Figure 39: End seal kit installation instructions, page 1 of 2*

## INSTALLATION

**2. FOR CABLE WITH EXPOSED METAL BRAID (-C):**
Push the braid back three inches to expose the base cable insulation. See Figure 2.

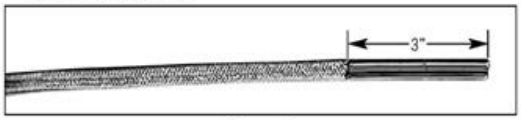


**Figure 2**

**3. FOR ALL CABLE:**
Slide the pressure plate and grommet over the end of the cable. **Note:** The pressure plate and end cap have different size curved surfaces on the top and bottom of each piece. These curved surfaces are designed to give a better fit on process equipment. The side with the smaller radius curve is for use on pipes with diameters up to three inches or on flat surfaces. The other side is for use on pipes with diameters of three inches or more. See Figure 3 and Figure 8.

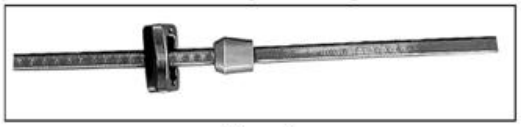

**Figure 3**

**4. FOR OVERCOATED CABLES (-CR or -CT):**
Score the outer jacket one inch from the end of the cable. Remove the jacket to expose the braid. Unravel and trim the braid flush with the outer jacket. Pull any strands of braid back towards the outer jacket. See Figure 4.

**Figure 4**

**5. FOR ALL CABLE:**
Using standard electrical cutters, cut a "VEE" notch between the buss wires. See Figure 5.

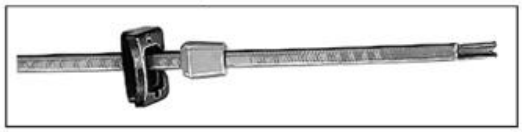

**Figure 5**

**6. FOR ALL CABLE:**
Slide the pressure plate and grommet towards the end of the cable leaving 5/8" of the cable extending past the end of the grommet. See Figure 6.

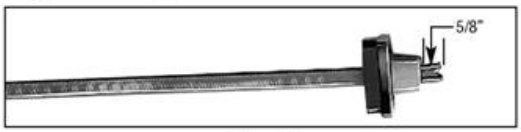


**Figure 6**

**7. FOR ALL CABLE:**
Slide the end cap over the grommet. Using a screwdriver, connect the pressure plate to the end cap. See Figure 7.

**Figure 7**

**8. FOR ALL CABLE:**
Using a fastening device, fiber re-inforced electrical tape (Chromalox FT-1 or equal), secure the assembly to the pipe. Wrap the tape around the assembly between the legs. See Figure 8.

**Figure 8**

### WARRANTY AND LIMITATION OF REMEDY AND LIABILITY

Chromalox warrants only that the Products and parts manufactured by Chromalox, when shipped, and the work performed by Chromalox when performed, will meet all applicable specification and other specific product and work requirements (including those of performance), if any, and will be free from defects in material and workmanship under normal conditions of use. All claims for defective or nonconforming (both hereinafter called defective) Products, parts or work under this warranty must be made in writing immediately upon discovery, and in any event, within one (1) year from delivery, provided, however all claims for defective Products and parts must be made in writing no later than eighteen (18) months after shipment by Chromalox. Defective and nonconforming items must be held for Chromalox's inspections and returned to the original f.o.b. point upon request. THE FOREGOING IS EXPRESSLY IN LIEU OF ALL OTHER WARRANTIES WHATSOEVER, EXPRESS, IMPLIED AND STATUTORY, INCLUDING, WITHOUT LIMITATION, THE IMPLIED WARRANTIES OF MERCHANTABILITY AND FITNESS FOR A PARTICULAR PURPOSE.

Notwithstanding the provisions of this WARRANTY AND LIMITATION Clause, it is specifically understood that Products and parts not manufactured and work not performed by Chromalox are warranted only to the extent and in the manner that the same are warranted to Chromalox by Chromalox's vendors, and then only to the extent that Chromalox is reasonably able to enforce such warranty, it being understood Chromalox shall have no obligation to initiate litigation unless Buyer undertakes to pay all cost and expenses therefor, including but not limited to attorney's fees, and indemnifies Chromalox against any liability to Chromalox's vendors arising out of such litigation.

Upon Buyer's submission of a claim as provided above and its substantiation, Chromalox shall at its option either (i) repair or replace its Products, parts or work at the original f.o.b. point of delivery or (ii) refund an equitable portion of the purchase price.

THE FOREGOING IS CHROMALOX'S ONLY OBLIGATION AND BUYER'S EXCLUSIVE REMEDY FOR BREACH OF WARRANTY, AND IS BUYER'S EXCLUSIVE REMEDY AGAINST CHROMALOX FOR ALL CLAIMS ARISING HEREUNDER OR RELATING HERETO WHETHER SUCH CLAIMS ARE BASED ON BREACH OF CONTRACT, TORT (INCLUDING NEGLIGENCE AND STRICT LIABILITY) OR OTHER THEORIES, BUYER'S FAILURE TO SUBMIT A CLAIM AS PROVIDED ABOVE SHALL SPECIFICALLY WAIVE ALL CLAIMS FOR DAMAGES OR OTHER RELIEF, INCLUDING BUT NOT LIMITED TO CLAIMS BASED ON LATENT DEFECTS. IN NO EVENT SHALL BUYER BE ENTITLED TO INCIDENTAL OR CONSEQUENTIAL DAMAGES AND BUYER SHALL HOLD CHROMALOX HARMLESS THEREFROM. ANY ACTION BY BUYER ARISING HEREUNDER OR RELATING HERETO, WHETHER BASED ON BREACH OF CONTRACT, TORT (INCLUDING NEGLIGENCE AND STRICT LIABILITY) OR OTHER THEORIES, MUST BE COMMENCED WITHIN ONE (1) YEAR AFTER THE DATE OF SHIPMENT OR IT SHALL BE BARRED.

W2008M

**Chromalox®**
**PRECISION HEAT AND CONTROL**
1382 HEIL QUAKER BLVD., LAVERGNE, TN 37086
Phone: (615) 793-3900 www.chromalox.com

98 - 068
TA - Q4 - EF
Litho in U.S.A.

*Figure 40: End seal kit installation instructions, page 2 of 2*

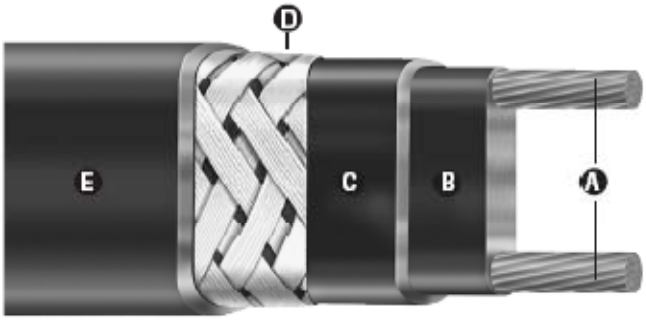


*Figure 41: Prepare the new heat trace cable for installation into the end seal kit*

A. Twin 14 AWG copper buss wires
B. Semi-conductive polymer core
C. High temp. fluoropolymer jacket
D. Metallic braid ground
E. High temperature fluoropolymer jacket

Chromalox®

## Installation Instructions

| SERVICE REFERENCE | | |
|---|---|---|
| DIVISION 4 | | SECTION RT |
| SALES REFERENCE | (Supersedes PJ451-9) | PJ451-10 |
| | | 161-562762-001 |
| DATE | MARCH, 2004 | |

# RTPC Power Connection Kit for Self-Regulating and Constant Wattage Rapid-Trace Heating Cable

**RTPC Power Connection Kit Parts:**

1 - Molded Junction Box consisting of: Base - Box - Lid - Hardware
1 - Three Position Terminal Block
1 - Mounting Screw for Terminal Block
1 - Cable Grommet
1 - Cover Gasket

## GENERAL

**⚠WARNING**

***ELECTRIC SHOCK HAZARD. Disconnect all power before installing or servicing heating cable and accessories. A qualified person must perform installation and service of heating cable and accessories. Heating cable must be effectively grounded in accordance with the National Electrical Code. Failure to comply can result in personal injury or property damage.***

**NOTE:** All electrical wiring, including GFCI (Ground Fault Circuit Interrupters), must be done according to National Electrical or local codes by a qualified person.

The RTPC Kit is used to connect base, braided (-C) and over-coated (-CR or -CT) versions of Self-Regulating and Fluoropolymer insulated Constant Wattage Rapid-Trace Heating Cables to power. The cable grommet is furnished with this kit, such that the kit suffix number is the same as the grommet number (eg., an RTPC-3 kit uses a GR3 grommet). Refer to the list below to insure you have the proper grommet for the cable you are installing.

| | |
|---|---|
| GR1 for SRL-C | GR2 for SRL-CR or SRL-CT |
| GR3 for CWM-C | GR4 for CWM-CT |
| GR5 for SRL-MC | GR6 for SRL-MCR or SRL-MCT |
| GR7 for SRM/E-C | GR8 for SRM/E-CT |

Each kit contains enough material to make one power connection point. It is possible to connect up to three Self-Regulating or two Constant Wattage Cables in the same box. (One grommet required for each cable.)

Materials required for installation include: standard electrical cutters, screwdriver, sharp utility knife and a pipe strap (Chromalox PS or equal).

Wipe inside lip of cover with a clean cloth. Remove protective backing from the gasket and affix it to the cover lip. Press firmly all around for proper adhesion.

© 2004 Chromalox, Inc.

*Figure 42: Electrical junction box installation instructions, page 1 of 4*

## INSTALLATION

**NOTE:** These instructions are for all Self-Regulating and Constant Wattage heating cables in ordinary locations. Consult factory for installation of braided cable in hazardous locations. Not all instructions are for all cables. Each step of the instructions will have a heading in boldface stating what type of cable each instruction is intended for.

1. **FOR CONSTANT WATTAGE CABLES:**
   Cut the cable 12 inches past the last module point (indentation in cable). **NOTE:** Cutting the cable between module points creates a non-heating cold lead. See Figure 1.

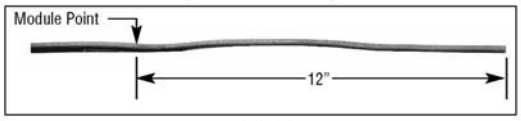


Figure 1

2. **FOR CABLE WITH EXPOSED METAL BRAID (-C):**
   Push the braid back 12 inches on the cable. See Figure 2.

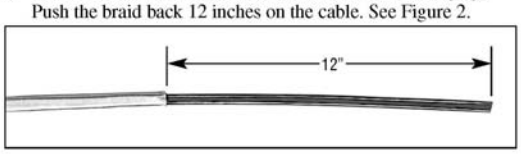


Figure 2

3. **FOR ALL CABLES:**
   Feed the ends of the cables through the appropriate hole in the base. Allow eight (8) inches of cable to extend above the top of the base. See Figure 3.

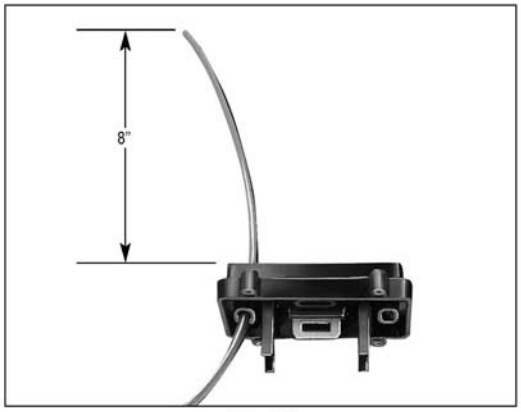


Figure 3

4. **FOR ALL CABLES:**
   Slide cable grommet over the end of the cable and insert it into the opening in the base. Secure the base to the pipe by threading the appropriate sized pipestrap through the slot in the mounting plate. Tighten the pipestrap until the base is securely attached to the pipe. See Figure 4.

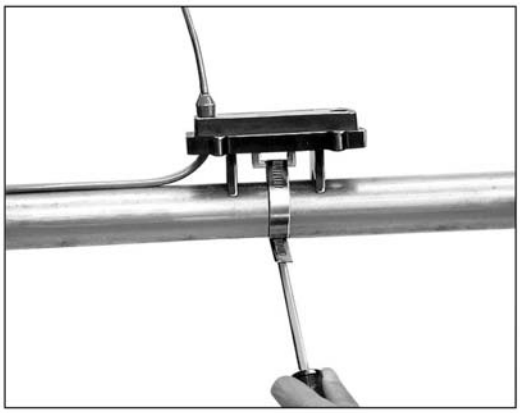

Figure 4

5. **FOR OVERCOATED CABLES (-CR or -CT):**
   Score the outer insulation seven (7) inches from the end of cable. Remove the jacket to expose the metal braid. See Figure 5. **CAUTION:** ***When removing the outer jacket, be careful not to damage the braid or the base cable insulation.***

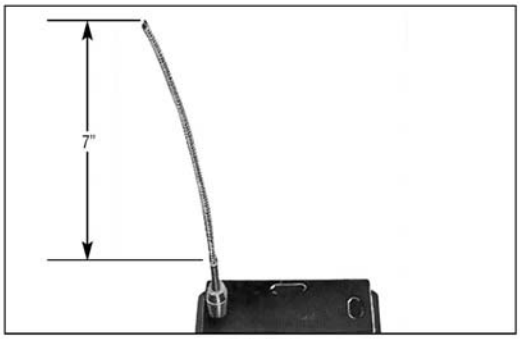


Figure 5

6. **FOR ALL CABLES:**
   Punch out the knockouts on the bottom of the box which correspond to the openings in the base through which the heating cable passes. Be careful to punch out only those knockouts to be used. If one is mistakenly punched, blank grommets can be ordered to re-establish the water tight seal. See Figure 6.

Figure 6

*Figure 43: Electrical junction box installation instructions, page 2 of 4*

## INSTALLATION

**7. FOR ALL CABLES:**
Feed the cables through the corresponding holes in the box. Secure box to base using all four (8-32) screws. See Figure 7.

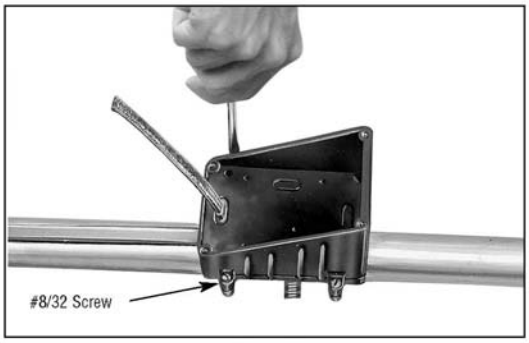


**Figure 7**

**8. FOR OVERCOATED CABLES:**
Starting from the end of the cable, unravel 2-1/2 inches of the braid. Twist the strands together to form a pigtail. See Figure 8.

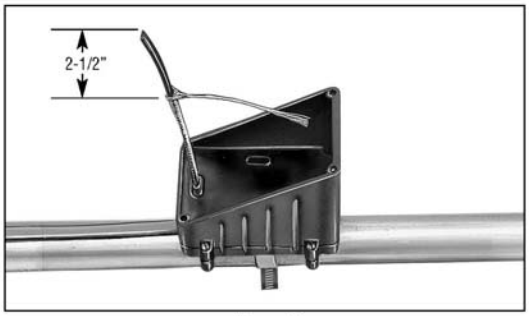


**Figure 8**

**9. FOR SELF-REGULATING CABLES:**
Using standard electrical cutters, cut a 3/4 inch long notch out of the cable between the conductor wires. Bare a 3/8 inch length of each conductor by stripping off the outside insulation and the inner black core material. See Figure 9.

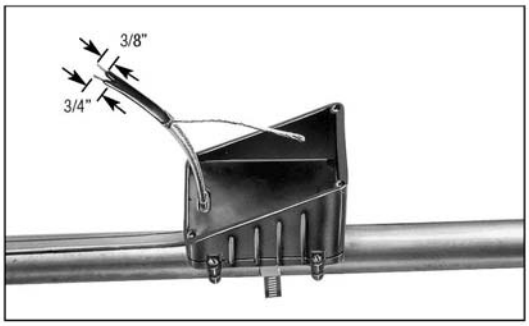


**Figure 9**

**10. FOR CONSTANT WATTAGE CABLES:**
Score the outer jacket 3/4 inch from the end of the cable and remove the jacket. Cut off the exposed nichrome wire, pushing any remainder back under the jacket. These cables have an inner layer of insulation which is also to be removed as described above. Separate the buss wires and strip off the last 3/8 inch of insulation from both buss wires. See Figure 10.

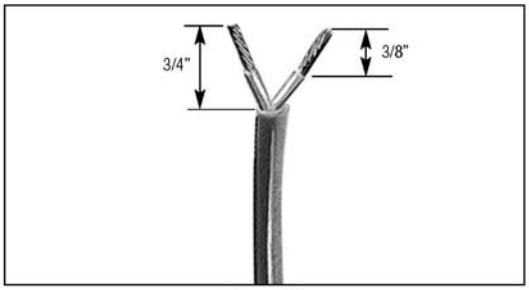


**Figure 10**

**11. FOR ALL CABLES:**
Insert the bared ends of the conductors into the openings in the terminal block. Tighten screws firmly to hold conductors in place. See Figure 11.

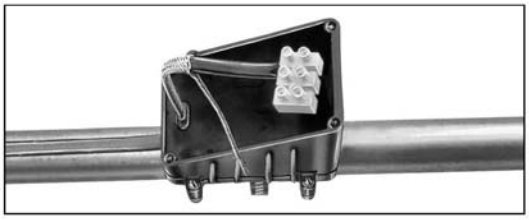

**Figure 11**

**12. FOR OVERCOATED CABLES (-CR or -CT):**
Insert the end of the braid pigtail into the remaining opening in the terminal block. Tighten screw firmly to hold the braid in place. See Figure 12.

**Figure 12**

**13. FOR ALL CABLES:**
Connect conduit hub (Chromalox CCH or equal) to the box. Attach conduit to hub and bring power leads into box. See Figure 13.

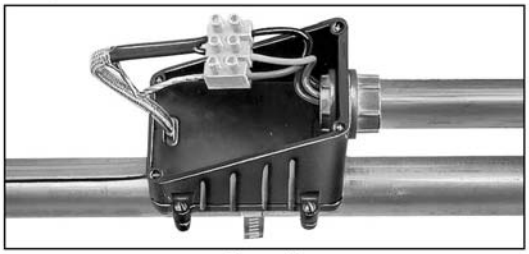

**Figure 13**

*Figure 44: Electrical junction box installation instructions, page 3 of 4*

## INSTALLATION

**14. FOR ALL CABLES:**
Strip 3/8 inch length of each conductor of the power cord. Insert the bared ends of the conductors into the corresponding openings on the unused side of the terminal block. Remember, the green (ground) wire must be opposite of the opening of the terminal block which is either empty or contains the metal braid. See Figure 14.

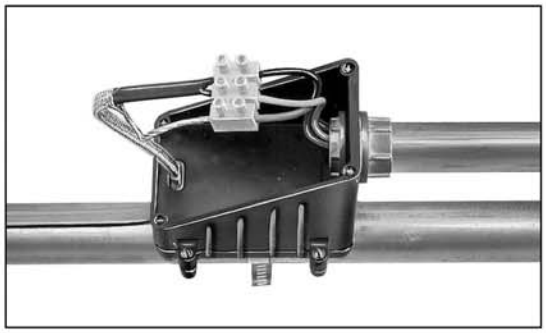

Figure 14

**15. FOR ALL CABLES:**
Mount terminal block to bottom of the box by driving the 6/32 self-tapping screw into the mounting hole as shown. See Figure 15.

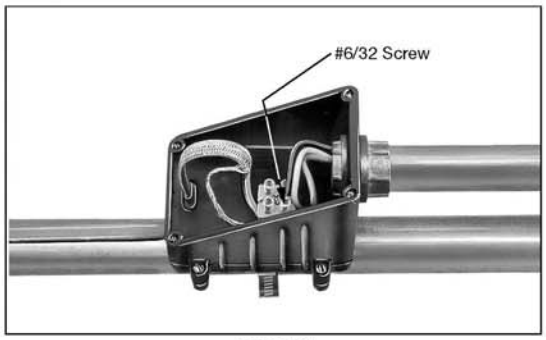


Figure 15

**16. FOR ALL CABLES:**
Carefully push the wires into the box. Secure the lid to box. See Figure 16.

Figure 16

**17. FOR CABLE WITH EXPOSED METAL BRAID (-C):**
Unravel four (4) inches of braid from the cable and twist into a pigtail.

**⚠WARNING**

***ELECTRIC SHOCK HAZARD. The twisted braid must be effectively grounded in accordance with the National Electrical Code to eliminate electric shock hazard.***

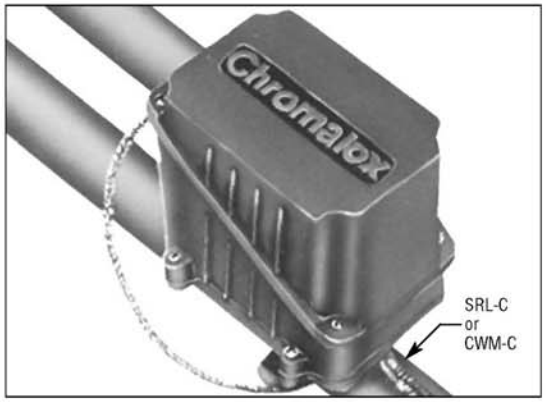


Figure 17

### WARRANTY AND LIMITATION OF REMEDY AND LIABILITY

Chromalox warrants only that the Products and parts manufactured by Chromalox, when shipped, and the work performed by Chromalox when performed, will meet all applicable specification and other specific product and work requirements (including those of performance), if any, and will be free from defects in material and workmanship under normal conditions of use. All claims for defective or nonconforming (both hereinafter called defective) Products, parts or work under this warranty must be made in writing immediately upon discovery, and in any event, within one (1) year from delivery, provided, however all claims for defective Products and parts must be made in writing no later than eighteen (18) months after shipment by Chromalox. Defective and nonconforming items must be held for Chromalox's inspections and returned to the original f.o.b. point upon request. THE FOREGOING IS EXPRESSLY IN LIEU OF ALL OTHER WARRANTIES WHATSOEVER, EXPRESS, IMPLIED AND STATUTORY, INCLUDING, WITHOUT LIMITATION, THE IMPLIED WARRANTIES OF MERCHANTABILITY AND FITNESS FOR A PARTICULAR PURPOSE.

Notwithstanding the provisions of this WARRANTY AND LIMITATION Clause, it is specifically understood that Products and parts not manufactured and work not performed by Chromalox are warranted only to the extent and in the manner that the same are warranted to Chromalox by Chromalox's vendors, and then only to the extent that Chromalox is reasonably able to enforce such warranty, it being understood Chromalox shall have no obligation to initiate litigation unless Buyer undertakes to pay all cost and expenses therefor, including but not limited to attorney's fees, and indemnifies Chromalox against any liability to Chromalox's vendors arising out of such litigation.

Upon Buyer's submission of a claim as provided above and its substantiation, Chromalox shall at its option either (i) repair or replace its Products, parts or work at the original f.o.b. point of delivery or (ii) refund an equitable portion of the purchase price.

THE FOREGOING IS CHROMALOX'S ONLY OBLIGATION AND BUYER'S EXCLUSIVE REMEDY FOR BREACH OF WARRANTY, AND IS BUYER'S EXCLUSIVE REMEDY AGAINST CHROMALOX FOR ALL CLAIMS ARISING HEREUNDER OR RELATING HERETO WHETHER SUCH CLAIMS ARE BASED ON BREACH OF CONTRACT, TORT (INCLUDING NEGLIGENCE AND STRICT LIABILITY) OR OTHER THEORIES. BUYER'S FAILURE TO SUBMIT A CLAIM AS PROVIDED ABOVE SHALL SPECIFICALLY WAIVE ALL CLAIMS FOR DAMAGES OR OTHER RELIEF, INCLUDING BUT NOT LIMITED TO CLAIMS BASED ON LATENT DEFECTS. IN NO EVENT SHALL BUYER BE ENTITLED TO INCIDENTAL OR CONSEQUENTIAL DAMAGES AND BUYER SHALL HOLD CHROMALOX HARMLESS THEREFROM. ANY ACTION BY BUYER ARISING HEREUNDER OR RELATING HERETO, WHETHER BASED ON BREACH OF CONTRACT, TORT (INCLUDING NEGLIGENCE AND STRICT LIABILITY) OR OTHER THEORIES, MUST BE COMMENCED WITHIN ONE (1) YEAR AFTER THE DATE OF SHIPMENT OR IT SHALL BE BARRED.

W2008M

**Chromalox®**
**PRECISION HEAT AND CONTROL**
1382 HEIL QUAKER BLVD., LAVERGNE, TN 37086
Phone: (615) 793-3900 www.chromalox.com

98 - 025
TA - Q4 - EF
Litho in U.S.A.

*Figure 45: Electrical junction box installation instructions, page 4 of 4*

*Figure 46: End seal kit location and heat trace cable installation*

*Figure 47: Installed electrical junction box with electrical connections*

# 11 Hydrocarbon Infrared (HC IR) Sensor Module Replacement

## 11.1 Safety

Use lockout / tagout procedures prior to starting work.

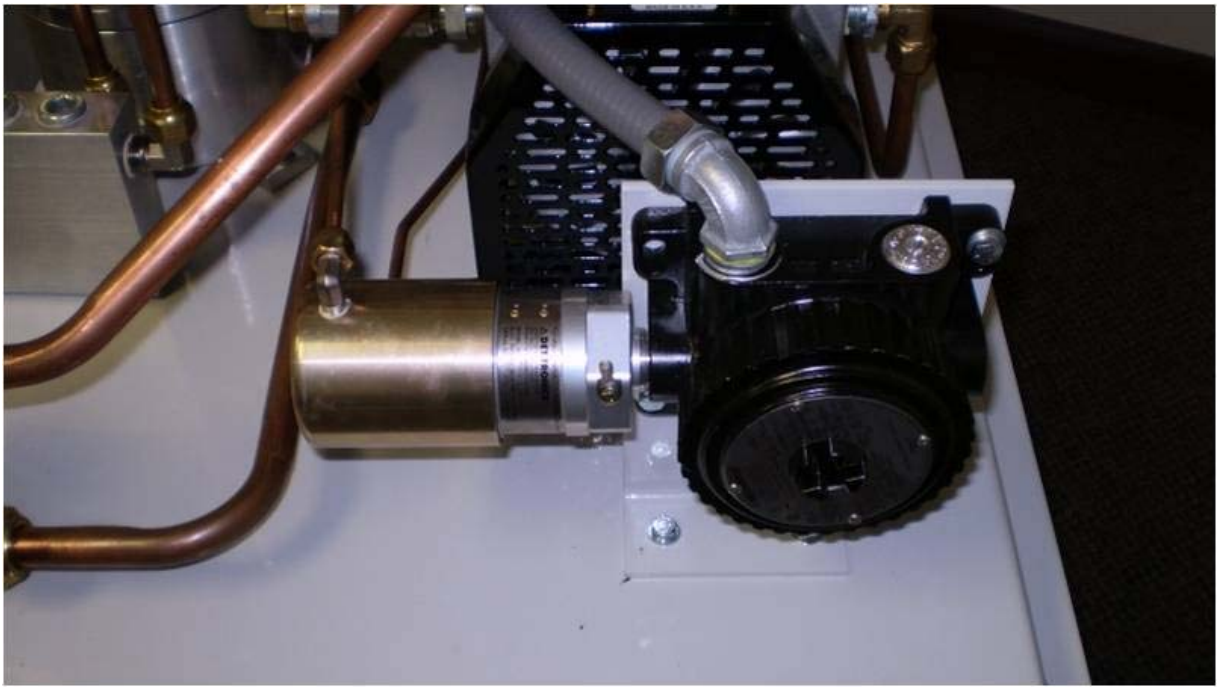

*Figure 48: HC IR Sensor Module and Electrical Housing Assembly*

## 11.2 Removing HC IR Sensor from the HC IR Sensor Module Electrical Housing

1. Prior to starting work, put the TLS-350 in the Manual "OFF" mode.
   See Figure 12: Page 15-39 or Figure 13: Page 15-40.

2. At the disconnect switch or the breaker, disconnect power to the heat trace cable, the vacuum pump, and the blower motors.

3. In the electrical room, turn off the HC Sensor power by disconnecting the 115V power to the HC Sentry Module.

4. Disconnect and completely remove the ¼" 45° flare tubing from the top and bottom sides of the HC IR Sensor Module.
   - See Figure 49: Page 15-87.
   - NOTE: The nuts on the tubing are ¼" 45° flare. Use caution to avoid damaging the flared ends on the tubing or the threads on the nuts after removal.

5. Remove the cover on the electrical house and keep for re-use.
   - NOTE: Do not remove the HC sensor electrical housing.

Continued next page . . .

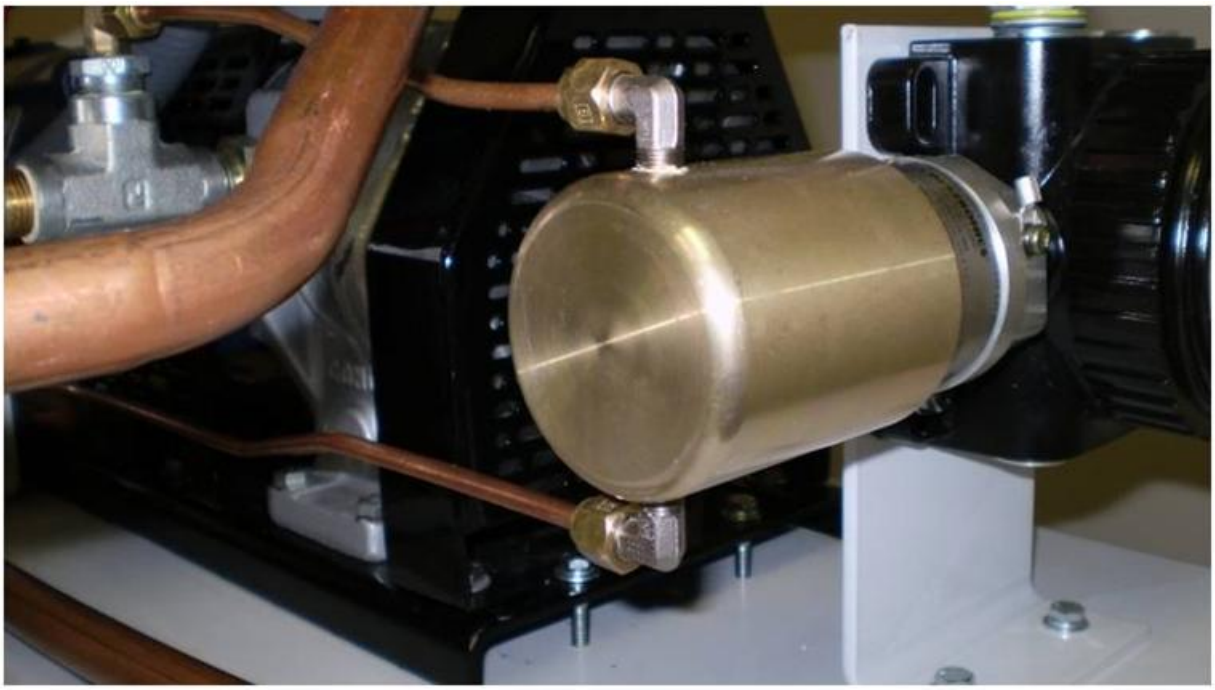

*Figure 49: HC IR Sensor Module 1/4" 45º tubing and fittings*

6. Disconnect the following HC IR sensor wires from the electrical housing circuit board:

   - White: 4-20 mA signal wire
   - Black: -(common) RET wire
   - Red: +24VDC power wire
   - NOTE: The yellow and green wires are not used in this application.
   - See Figures 50 and 51: Page 15-88.

7. Unscrew and remove the HC IR Sensor Module from the electrical housing.
   - Package the used HC IR Sensor Module in the anti-static bag and box that came with the new / recalibrated HC IR Sensor Module unit.
   - The used HC IR Sensor Module can be sent back to VST for re-calibration.

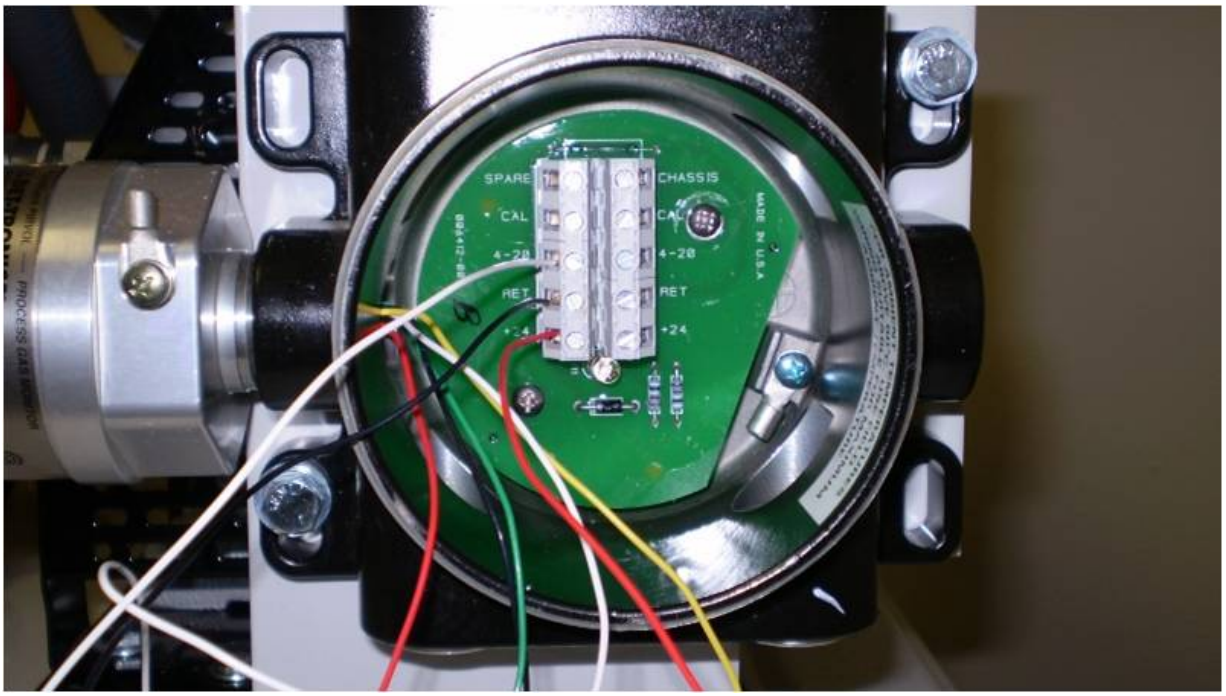


*Figure 50: HC IR Sensor Electrical Housing Circuit Board*

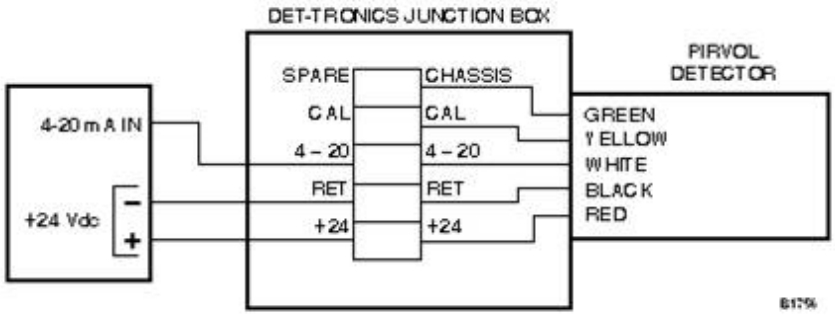


*Figure 51: HC IR Sensor Electrical Housing Circuit Board Wiring Diagram*

## 11.3 Installing a New or Re-calibrated HC IR Sensor Module to the HC IR Sensor Module Electrical Housing

1. Use only silicon grease (not hydrocarbon-based grease) to lubricate the HC IR sensor threads prior to installation.
   - Hydrocarbon-based grease or lubricant will emit hydrocarbon vapors, which will be measured by the HC sensor and will cause inaccurate gas-level readings.

2. Screw the new / re-calibrated HC IR sensor module to the electrical housing.
   - Remove the aluminum cover from the HC IR sensor.
   - While screwing on the sensor, orient the optics in the vertical position.
   - See Figure 52: Page 15-89.

3. Replace the aluminum cover on the HC IR sensor.

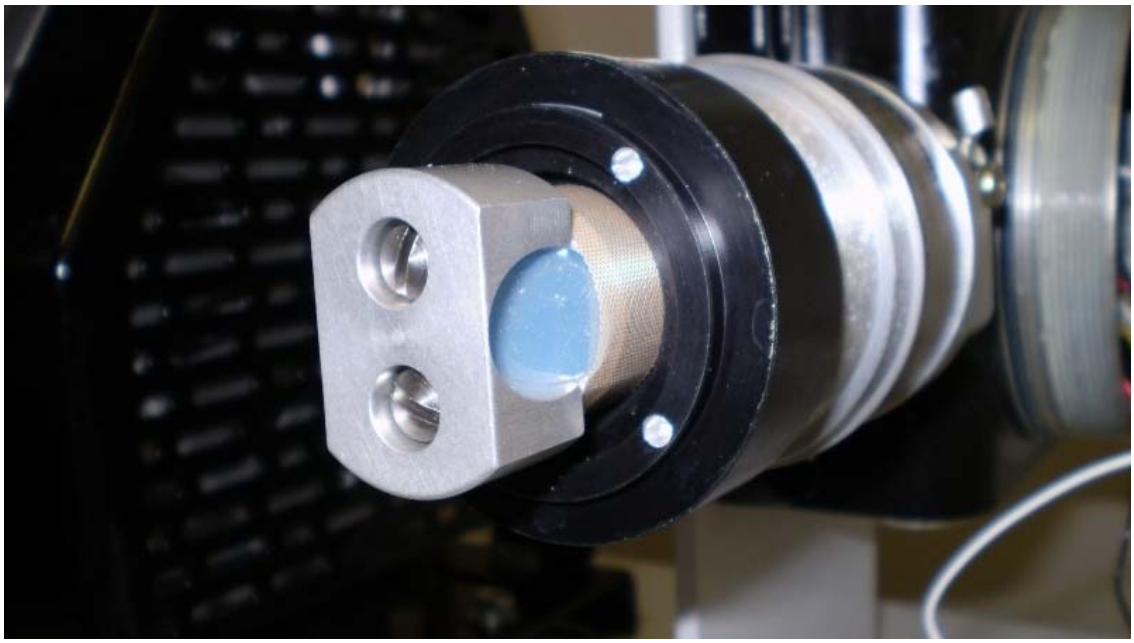

*Figure 52: HC IR sensor installation orientation*

4. Connect the following HC IR sensor wires to the electrical housing circuit board:
   - White: 4-20 mA signal wire
   - Black: -(common) RET wire
   - Red: +24VDC power wire
   - NOTE: the yellow and green wires are not used in this application.
   - See Figures 50 and 51: Pages 15-X and 15-Y.

5. Install the cover on the electrical housing.
   - Use only silicon grease (not hydrocarbon-based grease) to lubricate the cover threads prior to installation.
   - Hydrocarbon-based grease or lubricant will emit hydrocarbon vapors, which will be measured by the HC sensor and will cause inaccurate gas-level readings.

6. Re-install the (2) ¼" 45° flare tubing on the top and bottom sides of the HC IR sensor module.
   - NOTE: When tightening the 45° flare nuts, clamp the tube flare between the nut and the nose body of the tube by screwing the nut on finger-tight. Tighten with a wrench an additional ¼-turn for a metal-to-metal seal.

7. Remove the lock(s) and tags from the lockout/tagout.

8. At the breaker and at the disconnect switch, turn ON power to the heat trace, blower, and vacuum pump.

9. In the electrical room, turn ON power to the HC Sentry Module.

10. Perform a *Processor* Leak Test – see Section 3.8: Page 15-50 of this document.

11. After the installation is complete, put the TLS-350 in the AUTOMATIC ON mode.
    - See Figure 12 or 13: Pages 15-39 and 15-40.

# 12 Forms

- The following pages contain forms for:
    - ► Scheduled preventative maintenance list
    - ► Scheduled preventative maintenance checklist

## 12.1 Preventative Maintenance

| Preventative Maintenance | | | |
|---|---|---|---|
| ASC #: | | Date: | |
| ASC Name: | | | |
| ASC Certification Level: | | | |
| ASC Company: | | | |
| GDF Name: | | | |
| Address: | | | |
| City: | | State: | ZIP Code: |
| GDF Contact Person Name: | | | |
| GDF Contact Person Title: | | | |
| GDF Contact Person Phone: | | | |
| GDF Contact Person E-mail: | | | |
| Notes | | | |
| Use the form on the following page to note details of Preventative Maintenance activities. | | | |

## 12.2 Preventative Maintenance Checklist Form

| Component | Frequency | Date Inspected | Completed | Required Action Items |
|---|---|---|---|---|
| ***PROCESSOR*** | Yearly | | | |
| • Inspect drive coupling on vacuum pump. | | | [] | |
| • Check the continuity of the heat trace cable. | | | [] | |
| RECIRCULATION BLOWER | | | | |
| • Replace every 10 years or every 15,000 hours, whichever comes first. | | | [] | |
| VACUUM PUMP | | | | |
| • Replace every 10 years or every 15,000 hours, whichever comes first. | | | [] | |