California Environmental Protection Agency

Air Resources Board

ARB Approved

Installation, Operation and Maintenance Manual

for

Executive Order

VR-204-D
VST Phase II EVR System Including Veeder-Root
In-Station Diagnostics (ISD)

NOTICE:

The **ARB Approved Installation, Operation and Maintenance Manual (IOM) for VR-204** describes the tools, methods, and skill levels required to install the **VST Phase II EVR System Including Veeder-Root ISD.**

Unless specified in this IOM, only skilled technicians that are trained, certified, and licensed by VST, Inc. (i.e. VST Authorized Service Contractors) are able to perform installation, maintenance, or repairs of components manufactured by VST Inc. or the warranty will be void. Unless specified otherwise, only skilled technicians that are trained, certified, and licensed by the Veeder-Root Company are able to perform installation, maintenance, or repairs of components manufactured by the Veeder-Root Company or the warranty will be void.

It is the responsibility of each VST Authorized Service Contractor (ASC) and/or each Veeder-Root technician to be familiar with the current requirements of state, federal, and local codes for installation and repair of gasoline dispensing equipment.

It is also the responsibility of the VST ASC and/or the Veeder-Root technician to be aware of all the manuals, necessary safety precautions, and site safety requirements to assure a safe and trouble-free installation.

To participate in a VST training class, a candidate will need to complete an enrollment form, which can be downloaded from the VST website at www.vsthose.com or requested by phone at 937-704-9333. Once the enrollment form is approved by VST, the candidate can enroll in a VST training class. A schedule of classes is also available on the above VST website.

To confirm a VST Authorized Service Contractor status, a regulator can go to the VST website at www.vsthose.com. This list is updated periodically.

Vapor Systems Technologies, Inc.
650 Pleasant Valley Drive
Springboro, Ohio 45066

PH: 937-704-9333
FX: 937-704-9443
www.vsthose.com

To confirm Veeder-Root TLS or ISD training, a regulator should send an email to technicaltraining@gilbarco.com with the name (and company) of the ASC to obtain verification of the ASC TLS/ISD training status or call 800-997-7725 and press “*” to get to the Veeder-Root menu and “*” again to speak to a representative.

Table of Contents

Section 1:	About VST
Section 2:	Table of Terms & Abbreviations
Section 3:	Contractor Requirements
Section 4:	System Components
Section 5:	Overview – EVR Balance Total System
Section 6:	Daily Inspections
Section 7:	Annual Inspections
Section 8:	Alarm Troubleshooting Summary
Section 9:	Drive-offs and Other Customer Abuse
Section 10:	Phase II Coaxial Balance EVR Dripless Nozzles
Section 11:	Phase II Coaxial EVR Nozzle Front-End Kits
Section 12:	Phase II Coaxial EVR Balance Fuel Hose
Section 13:	Phase II Coaxial EVR Balance Safety Breakaway Device
Section 14:	VST ECS Membrane Processor: Installation
Section 15:	VST ECS Membrane Processor: Operation, Maintenance, & Start-Up
Section 16:	Veeder-Root: ISD Installation Manual
Section 17:	Veeder-Root: Pressure Sensor Installation Guide
Section 18:	Veeder Root: Carbon Canister Vapor Polisher Installation
Section 19:	Flow Meter Installation Guide

About VST

Vapor Systems Technologies, Inc. began in 1989 with the vision of **One Company – One Integrated Solution**.

Today, that philosophy is still in place and getting stronger. Recognizing that a healthier environment is a need and not an option, VST has dedicated its undivided attention to the ever-changing, stringent regulations that govern fugitive vapors at gasoline dispensing facilities (GDF).

To this challenge, VST is committed to a continual R&D campaign of developing the most current, technologically advanced solutions to service not only the United States, but also the world.

VST specializes in the development, engineering, and manufacturing of products that are sold into the GDF segment of the petroleum industry. The VST focus provides our customers and users with exceptional products, services, and innovative solutions for improving the fueling-station experience as well as for the world's air quality.

VST's product offering includes curb pump and vapor recovery hoses, safety breakaways, nozzles, and emission-control system *Processor*s. The ENVIRO-LOC™ vapor-recovery product offering represents the most innovative concept in the industry for trapping fugitive vapors from the front end (vehicle refueling) to the back end (vent risers) of the GDF site.

Notice

Vapor Systems Technologies, Inc. shall not be liable for errors contained herein or for incidental or consequential damages in connection with the furnishing, performance, or use of this publication.

No part of this publication may be translated into another language without the prior written consent of Vapor Systems Technologies, Inc.

Veeder-Root is a leading global supplier of automatic tank gauging and fuel management systems, including the Red Jacket® brand of submersible pumps and pressurized line leak detectors. Veeder-Root and Red Jacket brands are both market leaders with a tradition of excellence in the petroleum industry. Veeder-Root is headquartered in Simsbury, Connecticut. For further product information about Veeder-Root solutions, contact Veeder-Root at 800-873-3313. You can register to sign up for updated information on enhanced vapor recovery on www.veeder.com.

Copyright © 2008 The Veeder-Root Company All rights reserved. Unauthorized duplication prohibited.

Table of Terms and Abbreviations

ASC:	Authorized Service Contractor
AQMD:	Air Quality Management Districts
ATG:	Automatic Tank Gauge
CARB:	California Air Resources Board
CCVP:	Carbon Canister Vapor Polisher
CDFA:	California Department of Food & Agriculture
CVLD:	Continuous Vapor Leakage Detection, another name for Vapor Leak Detection
ECS:	Emissions Control System
EO:	Executive Order
EVR:	Enhanced Vapor Recovery
GDF:	Gasoline Dispensing Facility
HC:	Hydrocarbon
HC IR:	Hydrocarbon Infrared
ISD:	In-Station Diagnostics
LEL:	Lower Explosive Level
MAG Probe:	A type (brand) of Tank Inventory Probe
NEC:	National Electric Code
NFPA:	National Fire Protection Association
ORVR:	On-Board Refueling Vapor Recovery
OSHA:	Occupational Safety Health Administration
Permeate:	Air return to atmosphere
PLC:	Programmable Logic Control
PMC:	Pressure Management Control
Retentate:	Vapor return to UST
RVP:	Reid Vapor Pressure
TLS:	Tank Level System
TLS Console:	Veeder-Root's line of environmental monitoring consoles.
TS:	Troubleshooting
Ullage:	Vapor space above liquid in a UST
UST:	Underground Storage Tank
VCK:	Vapor Collection Kit
Veeder Root:	Manufacturer of the TLS-350
VOC:	Volatile Organic Compounds

VP:	Vapor Polisher
VPS:	Vapor Polisher Sensor
V-R:	Veeder Root
VST:	Vapor Systems Technologies, Inc. - manufacturer of the ECS Membrane *Processor*
WC:	Water Column

VST Contractor Requirements

Due to the highly volatile nature of gasoline and its handling and storage, VST requires the following certifications for its ASC's:

Level	Component	Authorized Tasks	Training Pre-Requisites
A **Must be re-certified every two years**	Hanging Hardware	Functional Testing Installation Maintenance Repair	No pre-requisite
A/B **Must be re-certified every two years**	Hanging Hardware	Functional Testing Installation Maintenance Repair	No pre-requisite
	Membrane *Processor*	Installation	Veeder-Root UST Monitoring Systems Level 1, 2/3, or 4
C **Must be re-certified every two years**	Membrane *Processor*	Annual Testing Component Replacement Maintenance Operation Post-Installation Power-Up Testing Start-Up Testing Troubleshooting	VST level "A/B" Veeder-Root UST Monitoring Systems Level 2/3, or 4 Veeder-Root ASC w/VST PMC/ISD certification

NOTE:

Depending on local codes, in addition to the VST and Veeder-Root training, contractors may be required to take air-district training or ICC certification as an approved vapor-recovery installer.

- ASC's must be able to show proof of certification if asked. Carry the wallet card or have a copy of your certification on file with the GDF.
- The ASC must record his or her certification number on the applicable paperwork for all warranties to be deemed valid.
- Contractors should **ALWAYS** verify the training and certification requirements with the air-district staff **BEFORE** beginning installation of EVR systems.

Veeder-Root Contractor Requirements

Installer (Level 1) Certification	Contractors holding valid Installer Certification are approved to perform wiring and conduit routing; equipment mounting; probe, sensor and carbon canister vapor polisher installation; tank and line preparation; and line leak detector installation.
TLS-350 Technician (Level 2/3 or 4) Certification	Contractors holding valid TLS-350 Technician Certifications are approved to perform installation checkout, startup, programming and operations training, troubleshooting and servicing for all Veeder-Root TLS-300 or TLS-350 Series Tank Monitoring Systems, including Line Leak Detection and associated accessories.
In-Station Diagnostics (ISD-PMC) Technician Certification	ISD PMC Contractors holding a valid ISD/PMC Certification are approved to perform (ISD/PMC) installation checkout, startup, programming, and operations training. This training also includes troubleshooting and service techniques for the Veeder-Root In-Station Diagnostics system. A current Veeder-Root Technician Certification is a prerequisite for the ISD/PMC course.
Veeder-Root ISD/PMC Including Carbon Canister Vapor Polisher Contractor Certification	This Certification includes Executive Orders 203, 204 and the Veeder-Root Vapor Polisher. This certification is required for setup and service of the Veeder-Root Vapor Polisher.
Warranty Registrations may only be submitted by selected distributors.	

Executive Order VR-204-D
VST Phase II EVR System Including Veeder-Root ISD

Exhibit 1
Equipment List

Component	Manufacturer / Model
Nozzle	VST Model VST-EVR-NB, VST-EVR-NB-R (Rebuilt) (Figure 1A-1)
Coaxial Curb Hose	VST Model VDV-EVR Series (Figure 1A-2)
Coaxial Whip Hose	VST Model VSTA-EVR Series (Figure 1A-2)
Breakaway Coupling	VST Model VSTA-EVR-SBK (Figure 1A-2)
Hanging Hardware with Liquid Removal Device	(Figure 1A-3)
VST Membrane Processor	VST Model VST-ECS-CS3-XXX (Figure 1A-4) where XXX represents motor phase and HC Sensor 110 =Single-Phase with HC Sensor 310=Three-Phase with HC Sensor
Veeder-Root Vapor Filter	Veeder-Root Vapor Polisher 332761-002 (Figure 1A-5)
TLS Console **Veeder-Root TLS-350 Series, including but not limited to TLS-350, TLS-350 Plus, TLS-350R, Red Jacket ProMax, Gilbarco EMC consoles**	Veeder-Root 8482XX-XXX, 8470XX-XXX Promax 847097-XXX EMC PAO292011000X (Figure 1A-6) X = Any digit
ISD Software Version Number	1.02
Vapor Flow Meter **(1 per dispenser)**	Veeder-Root 332374-XXX (Figure 1A-7) X = Any digit
Vapor Pressure Sensor **(1 per GDF)**	Veeder-Root 331946-001 (Figure 1A-8)
Smart Sensor Interface Module **(1 per GDF)** With Atmospheric Sensor	Veeder-Root 329356-004 (Figure 1A-9) Veeder-Root 332250-001
Dispenser Interface Module **(DIM)**	Veeder-Root DIM Series (Figure 1A-10)
RS232 Interface Module	Veeder-Root RS232 Interface Module Series (Figure 1A-11)
Multiport Card	Veeder-Root 331944-000

Overview: EVR Balance Total System

- The VST ECS membrane *Processor* does not interact directly with the other balance system hardware. It is in place to monitor and control the pressure in the UST to within limits specified by CARB.

  Under conditions where the GDF is operational and the balance system hardware is functioning normally, the inherent ORVR compatibility of the balance system (when using VST's ENVIRO-LOC nozzle) will produce a predominately negative gauge pressure in the ullage space of the UST. Under these conditions the ECS membrane *Processor* will typically not need to operate.

  During periods of less activity, the GDF being shut down overnight, winter fuels being present, or other conditions that promote the pressurization of the ullage space, the ECS membrane *Processor* will operate as needed to control the pressure in the ullage space to an accepted level. The ECS membrane *Processor* will turn on at an ullage pressure of +0.20 inches of water and turn it off at a pressure of –0.20 inches of water. Currently, the ECS membrane *Processor* unit is monitored and controlled through the PMC or ISD software.

- The ECS membrane *Processor* uses a type of membrane technology to enable it to selectively separate the components in the ullage vapor mixture.

  Through a somewhat complex transport means, certain molecules will selectively travel in a stream from one side of the membrane to the other. This stream is referred to as the permeate stream.

  In this case, predominate molecules transported across the membrane will be the primary constituents of air, which are oxygen, nitrogen, and water vapor. A small amount of the hydrocarbons present in the ullage mixture will also migrate across the membrane. Typically, permeate will contain less than 3.0% hydrocarbons. The result of this activity includes, fresh air vented to atmosphere, hydrocarbon vapors returned to the UST, and UST pressurization controlled to an acceptable level.

- The process of separation by the membrane is made possible by using two pumps, one low-pressure pump which circulates the ullage vapor mixture along one side of the membrane, and one high-vacuum pump, which creates the pressure differential needed to cause the permeate transport across the membrane. These are the only moving parts in the system.

Overview of How the VST Membrane Processor Operates

- The Processor is a technology created for Gasoline Dispensing Facilities (GDF) to assist them in reducing the number of harmful emissions released to the atmosphere through the natural occurrence of gasoline vaporization.

- The table below lists the steps that the Veeder-Root TLS 350 and the software takes to control the Processor.

1.	• When the UST system pressure rises above +0.2”WC, the *Processor* turns **ON**.
2.	• Through the vapor inlet pipe connection at the *Processor*, the VOC vapor is drawn into the suction side of the blower.
3.	• The blower discharges the VOC vapor into the membrane housing.
4.	• Inside the membrane housing, the VOC vapor is separated in to two air streams: VOC depleted air (referred to as “air”) Gasoline VOC vapor • The membrane is designed specifically for separating air from gasoline VOC vapor.
5.	• A vacuum pump draws the air from the membrane housing through a check valve.
6.	• A sample of the air flows through a hydrocarbon sensor to check the percent hydrocarbons.
7.	• From the vacuum pump, the air is vented to atmosphere via the air return.
8.	• The gasoline VOC vapor returns to the UST system via the vapor return.
9.	• When the UST system pressure drops below -0.2”WC, the *Processor* turns **OFF**.

Overview of How the VR Polisher Operates

The Veeder-Root Vapor Pressure Management System is a substitute for the VST ECS Membrane Processor. A balance EVR system using the Veeder-Root Vapor Polisher is used in conjunction with certified hanging hardware to provide pressure management for fuel retail stations.

HOW THE SYSTEM WORKS

The Veeder-Root Vapor Polisher mounts directly onto the station's existing vent riser, utilizing a single tap into the vapor space of the containment system. The canister contains activated 'high capacity' carbon that filters emissions that enter through an inlet at the bottom of the canister from the vent pipe. The outlet at the top of the carbon canister releases cleansed air into the atmosphere reducing the pressure in the underground storage tank. This outlet is controlled by a valve controlled by the TLS-350. The operation of the vapor polisher is continuously monitored through an electronic control module that is interfaced to the TLS-350 via an intrinsically-safe electrical connection.

HOW THE SYSTEM OPERATES

When the UST pressure goes positive	• The TLS 350 opens the valve on the output port of the canister allowing vapor to enter the canister • As vapor flows through the canister, active carbon inside captures the hydrocarbon vapors allowing clean air to exit the canister • Pressure in the UST falls
When the UST pressure goes negative	• The TLS 350 opens the valve on the output port of the canister allowing fresh air to enter the canister • As the fresh air passes through the canister, the hydrocarbons are removed from the carbon and returned to the UST. • Evaporative loss is reduced

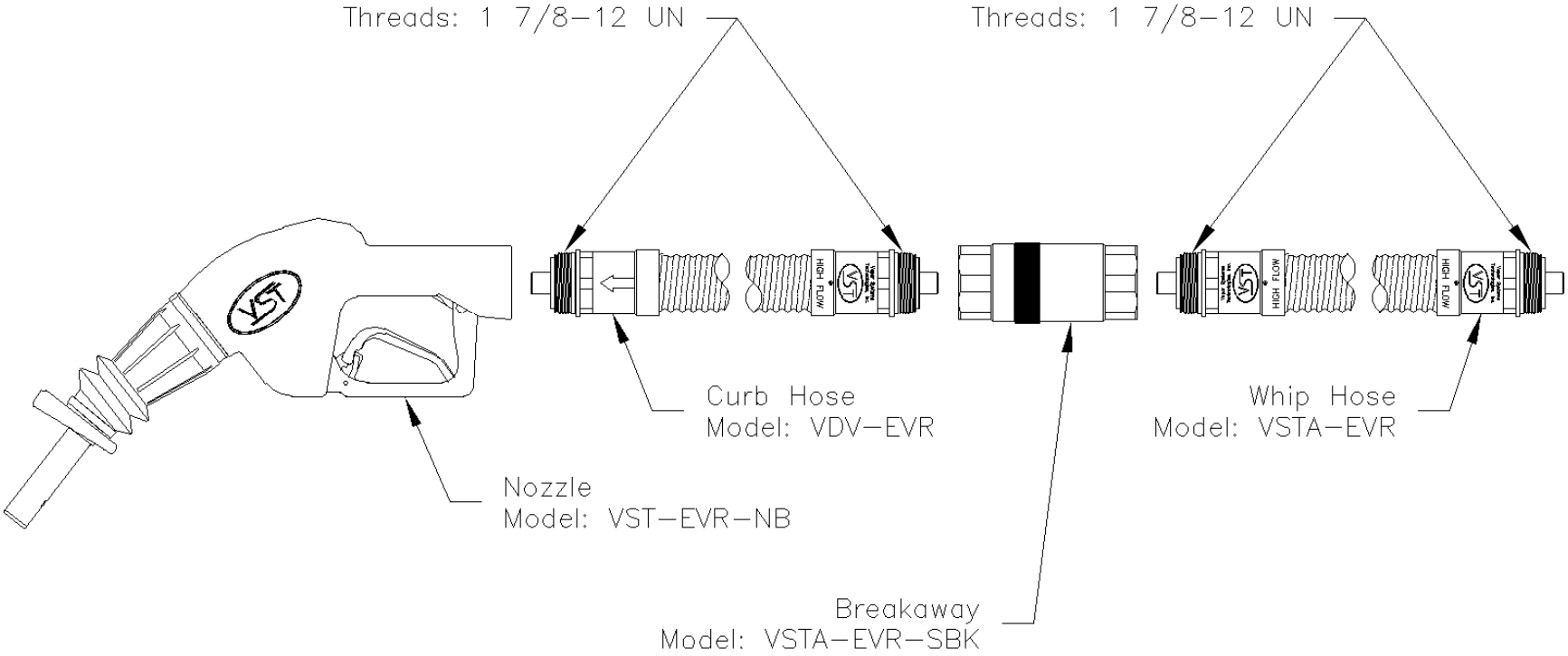

Figure 1: VST Hanging Hardware
(Nozzle, Coaxial Curb Hose, Breakaway, and Coaxial Whip Hose)

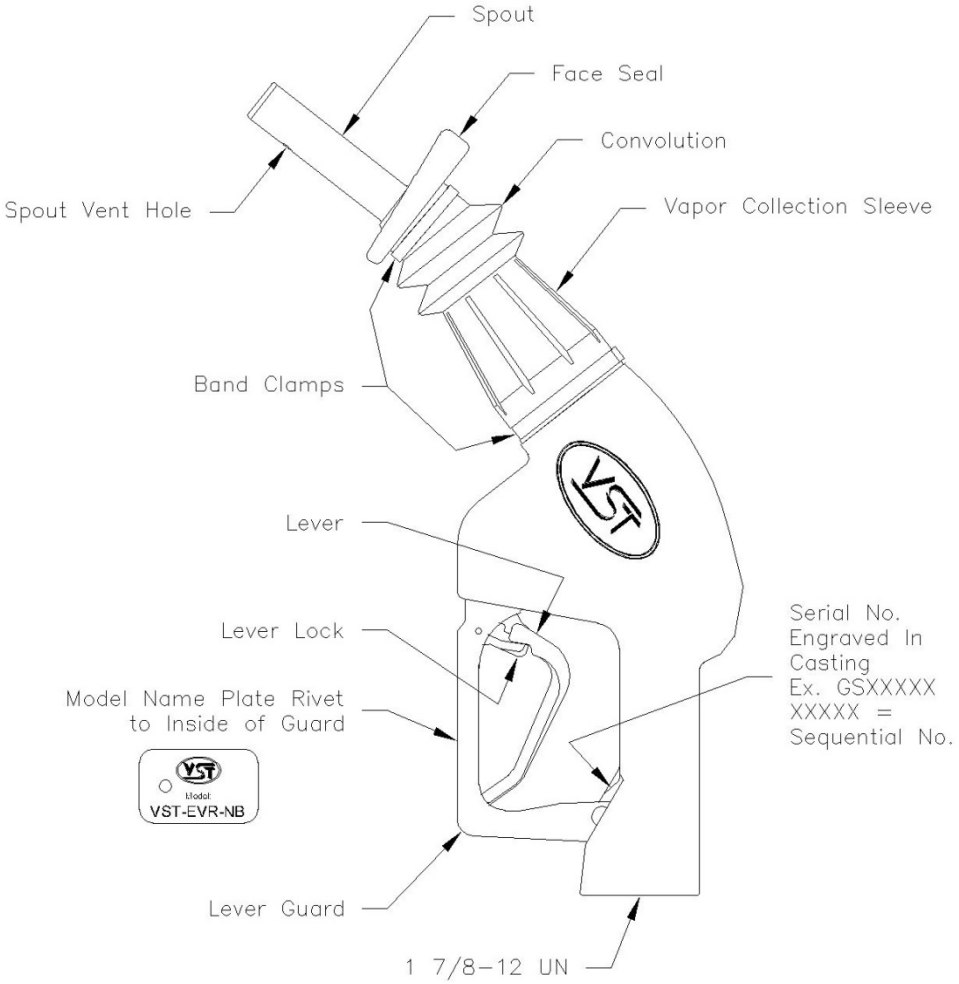

Figure 2: Model VST-EVR-NB Nozzle

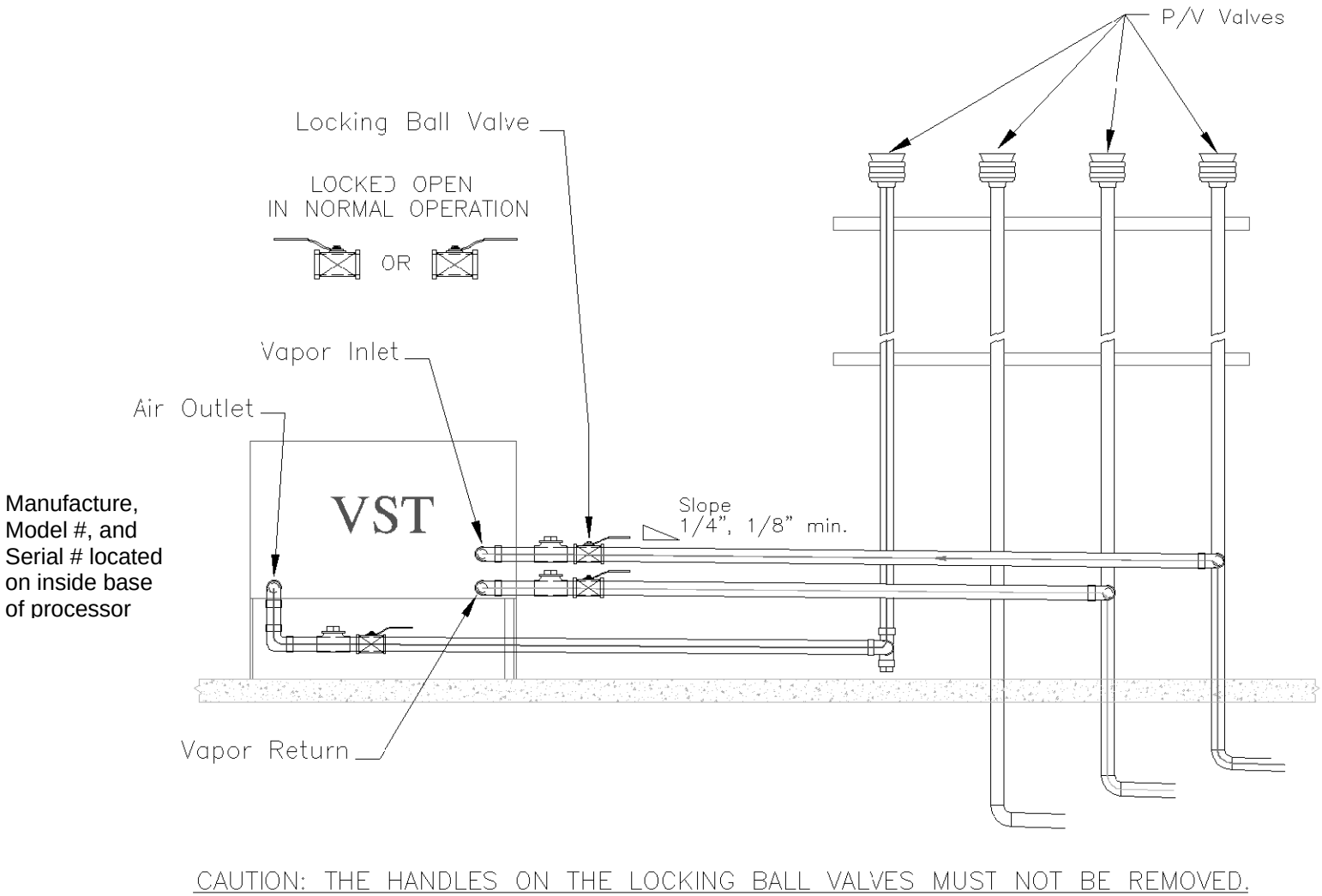

Manufacture, Model #, and Serial # located on inside base of processor

Figure 3: Model VST-ECS-CS3 Membrane Processor

Daily Inspections

HANGING HARDWARE SYSTEM					
Component	**Procedure**	**Fail Criteria**	**Corrective Action**	**Reference Manuals**	**Authorized Personnel**
Nozzle Hose Breakaway	Inspect each hose, breakaway, and nozzle for loose connections or leaks	Presence of a leak	Tighten connections or replace with new VST product	IOM-10	**Nozzle, hose, or breakaway replacement**: GDF owner-operator or VST ASC Levels A, B, or C **Component repair:** VST ASC Levels A, B, or C
		Presence of residue from a leak	Tighten connections or replace with new VST product	IOM-12	
		Visible o-ring between any component connection	Tighten connections or replace with new VST product	IOM-13	

CO-AXIAL HOSES					
Component	**Procedure**	**Fail Criteria**	**Corrective Action**	**Reference Manuals**	**Authorized Personnel**
Coaxial Hose	Inspect hoses for wear, severe kinks, cracks, splitting, and functional swivels	Kinks, cracks, splitting, non-functional swivels, or any visible openings	Replace with new VST hose	IOM-12	**Hose replacement:** GDF owner-operator or VST ASC Levels A, B, or C

BREAKAWAY					
Component	**Procedure**	**Fail Criteria**	**Corrective Action**	**Reference Manuals**	**Authorized Personnel**
Breakaway	Inspect breakaway for leaks around the scuff	Presence of a leak around the scuff	Replace with new breakaway	IOM-13	**Replace breakaway:** Owner/Operator or VST ASC Levels A, B, or C

NOZZLE					
Nozzle Component	**Procedure**	**Fail Criteria**	**Corrective Action**	**Reference Manuals**	**Authorized Personnel**
Nozzle lever, lever guard, lever lock	Inspect for defects, cuts, or damage to the: Nozzle Lever Lever Guard Lever Lock Spout Spout Vent Hole Face Seal Interlock Rod Vapor Collection Sleeve.	Damaged or missing	Replace with new VST nozzle	IOM-10	GDF Owner/Operator or VST ASC Levels A, B, or C
Nozzle Spout		Sheared or bent	Replace nozzle spout assembly with new VST spout or replace with new VST nozzle	IOM-10 IOM-11	VST ASC Levels A, B, or C
Nozzle Vent Hole		Vent hole blocked	Clear blockage	IOM-10	GDF Owner/Operator or VST ASC Levels A, B, or C
Nozzle Collection Sleeve		If greater than 18 inches total length of cuts (if greater than .375 sq. inches of material missing)	Replace vapor collection kit	IOM-11 Exhibit 2	VST ASC Levels A, B, or C
			Replace nozzle with new VST nozzle	IOM-10 Exhibit 2	GDF Owner/Operator or VST ASC Levels A, B, or C
Nozzle Face Seal		Greater than 30% of the material is missing (if greater than 2.5 inches of the accumulated faceplate circumference is missing)	Replace vapor collection kit	IOM-11	VST ASC Levels A, B, or C
			Replace nozzle with new VST nozzle	IOM-10	GDF Owner/Operator or VST ASC Levels A, B, or C
Nozzle Front-End Kit (Collection sleeve and face seal)		Alignment lines are misaligned and/or the assembly is cockeyed	Replace vapor collection kit	IOM-11	VST ASC Levels A, B, or C
			Replace nozzle with new VST nozzle	IOM-10	GDF Owner/Operator or VST ASC Levels A, B, or C
Nozzle Interlock Rod	IOM-10 IOM-11	Interlock rod sticks during engagement or disengagement	Replace vapor collection kit	IOM-11	VST ASC Levels A, B, or C
			Replace nozzle with new VST nozzle	IOM-10	GDF Owner/Operator or VST ASC Levels A, B, or C

Daily Inspection and Testing Checklist

Checklist results may be used to assist with filling out GDF maintenance log.			Date:	Page: _____of_____
Dispenser Number	Unihose or Fuel Grade (circle one)	Nozzle Inspection (circle one)	Hose Inspection (circle one)	Breakaway (circle one)
	Unihose 87 89 91 other _____	Pass Fail	Pass Fail	Pass Fail
	Unihose 87 89 91 other _____	Pass Fail	Pass Fail	Pass Fail
	Unihose 87 89 91 other _____	Pass Fail	Pass Fail	Pass Fail
	Unihose 87 89 91 other _____	Pass Fail	Pass Fail	Pass Fail
	Unihose 87 89 91 other _____	Pass Fail	Pass Fail	Pass Fail
	Unihose 87 89 91 other _____	Pass Fail	Pass Fail	Pass Fail
	Unihose 87 89 91 other _____	Pass Fail	Pass Fail	Pass Fail
	Unihose 87 89 91 other _____	Pass Fail	Pass Fail	Pass Fail
	Unihose 87 89 91 other _____	Pass Fail	Pass Fail	Pass Fail
	Unihose 87 89 91 other _____	Pass Fail	Pass Fail	Pass Fail
	Unihose 87 89 91 other _____	Pass Fail	Pass Fail	Pass Fail
	Unihose 87 89 91 other _____	Pass Fail	Pass Fail	Pass Fail
	Unihose 87 89 91 other _____	Pass Fail	Pass Fail	Pass Fail
	Unihose 87 89 91 other _____	Pass Fail	Pass Fail	Pass Fail
	Unihose 87 89 91 other _____	Pass Fail	Pass Fail	Pass Fail

Annual Inspections

Annual VST ECS Membrane *Processor* Inspections and Replacements					
Component	**Procedure**	**Fail Criteria**	**Corrective Action**	**Reference Manuals**	**Authorized Personnel**
Blower	Replace the blower every ten years or 15,000 hrs. (whichever comes first).			IOM - 15	VST ASC Level C
Vacuum pump	Replace blower every ten years or 15,000 hrs. (whichever comes first).				
Vacuum pump drive coupling - rubber insert	Visually inspect the drive coupling between the vacuum pump and the motor for wear	Rubber debris is found on or around the vacuum-pump base.	Replace the drive coupling rubber insert	IOM - 15	
Heat Trace Cable	Check the continuity of the heat trace cable.	If the heat trace cable circuit is open, the cable has failed.	Replace the heat- trace cable	IOM - 15	
HC Sensor	Test the HC sensor	The difference shall be within ±1.0% HC concentration from the calibration gas concentration. Record “Pass” if within ±1.0% or “Fail” if not within ±1.0%.	Replace the HC Sensor	IOM – 15 and Exhibit 6	

Preventative Maintenance Checklist Form

Component	Frequency	Date Inspected	Completed	Required Action Items
VST ECS PROCESSOR	**Yearly**			
• Inspect drive coupling on the vacuum pump.			[ ]	
• Check the continuity of the heat trace cable.			[ ]	
RECIRCULATION BLOWER				
Replace every 10 years or 15,000 hours, whichever comes first.			[ ]	
VACUUM PUMP				
Replace every 10 years or 15,000 hours, whichever comes first.			[ ]	

Annual System Compliance Testing

Annual System Compliance Testing	
Static Pressure Test:	TP-201.3 Exhibit 4
Dynamic Back Pressure Test:	TP-201.4
Liquid Removal Test Procedure:	Exhibit 5
Hydrocarbon Sensor Verification Test: VST ECS Membrane Processor	Exhibit 6
Vapor Pressure Sensor Verification Test:	Exhibit 8
VST ECS Membrane Processor Activation Test:	Exhibit 9
Nozzle Bag Test Procedure:	Exhibit 10
V-R Vapor Polisher Operability Tests:	Exhibit 11
V-R Vapor Polisher Compliance Test	Exhibit 12
ISD Operability Test: (Flow Meter Operability Test)	Exhibit 13

ISD Alarm Troubleshooting Summary

ISD Alarm Troubleshooting Summary				
Message	**ISD Category**	**Light**	**Cause**	**Suggested Troubleshooting[1]**
ISD VAPOR LEAKAGE WARN	Containment	Yellow	Containment system leaks at 2 times the TP-201.3 standard.	• Troubleshooting Guide found at www.vsthose.com • Exhibit 4
ISD VAPOR LEAKAGE FAIL[2]	Containment	Red	8th Consecutive Failure of Pressure Integrity (Vapor Leak) Test	
ISD GROSS PRESSURE WARN	Containment	Yellow	95th percentile of 7-days' ullage pressure exceeds 1.3 IWC.	• Troubleshooting Guide found at www.vsthose.com • Exhibit 8 • Exhibit 9
ISD GROSS PRESSURE FAIL[2]	Containment	Red	8th Consecutive Failure of Gross Containment Pressure Test	
ISD DEGRD PRESSURE WARN	Containment	Yellow	75th percentile of 30-days' ullage pressure exceeds 0.3 IWC.	
ISD DEGRD PRESSURE FAIL[2]	Containment	Red	31st Consecutive Failure of Degradation Pressure Test	
FLOW COLLECT WARN	Collection	Yellow	Vapor collection flow performance is less than 50%.	• Troubleshooting Guide found at www.vsthose.com. • Exhibit 5 • Exhibit 13
FLOW COLLECT FAIL[2]	Collection	Red	2nd Consecutive Failure of Vapor Collection Flow Performance Monitoring Test	
ISD VP STATUS WARN[4]	Processor	Yellow	Failure of Vapor Processor Effluent Emissions or Duty Cycle test.	• Troubleshooting Guide found at www.vsthose.com. • VP Emission Test • VP Duty Cycle Test
ISD VP STATUS FAIL[2,4]	Processor	Red	2nd Consecutive Failure of Vapor Processor Status test.	
ISD VP PRESSURE WARN[4,5]	Processor	Yellow	90th percentile of 1 day ullage pressure exceeds 1 IWC[4]. 90th percentile of 1 day ullage pressure exceeds 2.5 IWC[5].	• Troubleshooting Guide found at www.vsthose.com. • Exhibit 8 • Exhibit 9
ISD VP PRESSURE FAIL[2,4,5]	Processor	Red	2nd Consecutive Failure of Vapor Processor Overpressure Test	

ISD Alarm Troubleshooting Summary				
Message	**ISD Category**	**Light**	**Cause**	**Suggested Troubleshooting[1]**
VP EMISSION WARN[3,4]	Processor	Yellow	Mass emission exceeded the certified threshold.	• Troubleshooting Guide found at www.vsthose.com. • Exhibit 6 • Exhibit 9
VP EMISSION FAIL[4]	Processor	Red	2nd Consecutive Mass emission test failure.	
VP DUTY CYCLE WARN[3,4]	Processor	Yellow	Duty cycle exceeds 18 hours per day 0r 75% of 24 hours.	• Troubleshooting Guide found at www.vsthose.com. • PMC Setup Procedure • Exhibit 8 • Exhibit 9 • Exhibit 4
VP DUTY CYCLE FAIL[4]	Processor	Red	2nd Consecutive Duty Cycle Test Failure.	
ISD SENSOR OUT WARN	Self-Test	Yellow	Failure of Sensor Self-Test	• Confirm ISD sensor & module installation / communication per VR 204 IOM Section 16, Chapter 2
ISD SENSOR OUT FAIL	Self-Test	Red	8th Consecutive Failure of Sensor Self-Test	
ISD SETUP WARN	Self-Test	Yellow	Failure of Setup Test	• Confirm EVR/ISD programming per VR 204 IOM Section 16
ISD SETUP FAIL[2]	Self-Test	Red	8th Consecutive Failure of Setup Test	

[1]See ISD Troubleshooting Manual P/N 577013-819 and the VST ISD Troubleshooting Guide 9513-003 found at www.vsthose.com for a complete list of suggestions.
[2]ISD Site shut down alarms
[3]This warning will result in a ISD VP Status Warn
[4]VST ECS Membrane Processor.
[5]Veeder-Root Polisher

Drive-Offs and Other Customer Abuse

If the hanging hardware components are involved in a drive off or if they incur some customer abuse, and they are not replaced as new, each individual component of the hanging hardware **must be visually inspected and functionally tested** before the components can return to dispensing fuel.

- A visual assessment and functional tests are outlined in the following pages.

ANY COMPONENT THAT DOES NOT PASS A VISUAL INSPECTION OR FUNCTIONAL TEST MUST BE REPLACED.

IF THE BREAKAWAY IS INVOLVED IN A DRIVEOFF, IT MUST BE REPLACED.

THE BREAKAWAY IS NON-RECONNECTABLE.

Before beginning work, barricade the work area to block customer use.

1 Drive Offs & Other Customer Abuse: Perform a Visual Assessment

Visually inspect the hanging hardware system as follows to determine the extent of the damage:

Action	Test Procedure	Corrective Action	Reference Material	Authorized Personnel
Perform a thorough visual examination of the exterior of the whip hose and the curb hose for any obvious imperfections.	Obvious imperfections include, but are not limited to: Damage to the swivels Damage to the couplings Kinks / flat spots Tears to the outer hose	Replace with new VST hose(s).	IOM-12	**Hose replacement**: GDF Owner/Operator or VST ASC Levels A, B, or C
	If there are no imperfections to the whip and curb hose, those hoses may be reused.	After reassembly, conduct required functional tests.	IOM-12	VST ASC Levels A, B, or C
		If the functional tests fail, replace the hose(s).	IOM-12	GDF Owner/Operator or VST ASC Levels A, B, or C
Perform a thorough visual inspection of the nozzle for any obvious imperfections.	Obvious imperfections include, but are not limited to: Damaged spout (broken, bent) Damage to the face seal collection sleeve / interlock rod assembly Broken face seal Torn collection sleeve Bent interlock rod Nozzle alignment marks Damage to the lever and lever guard	Replace damaged components where applicable.	IOM-11	**Nozzle repair:** VST ASC Levels A, B, or C
		Replace with new VST nozzle.	IOM-10	**Nozzle replacement**: GDF Owner/Operator or VST ASC Levels A, B, or C
If no imperfection or damage is visibly evident, proceed to functional testing.				

Function Testing Description

Perform the following functional tests prior to re-using a hose or a nozzle following a drive-off:

Test	Test Procedure	Corrective Action	Authorized Personnel
Leak Check	Verify that there are no liquid leaks in all components. Dispense fuel and check each connection between the components. A visual inspection of the nozzle can determine any obvious liquid leaks.	Any component that does not pass the functional test must be replaced. Go to IOM 10, 12, and 13	GDF Owner/Operator or VST ASC Levels A, B, or C
Meter Creep	Checking for meter creep will verify the integrity of the connections. Dispense 1/10 to 2/10 of a gallon of fuel into an approved container then release lever and move components around and/or gently shake the hose and verify if the displace amount on the dispenser changes.	Any component that does not pass the functional test must be replaced. Go to IOMs 10, 12, and 13	GDF Owner/Operator or VST ASC Levels A, B, or C
Automatic Shut-Off and Insertion Interlock	Section 10 The insertion interlock mechanism shall not allow dispensing when the bellows is uncompressed as determined by direct observation or GDF-09 (See Vapor Recovery Defects list).	Repair or replace the nozzle Go to IOM-11	**Nozzle replacement** GDF Owner/Operator or VST ASC Levels A, B, or C **Nozzle repair** VST ASC Levels A, B, or C
Resistance	Section 10	Any component that does not pass the functional test must be replaced. Go to IOM 10, 12, and 13	GDF Owner/Operator or VST ASC Levels A, B, or C

VST Installation Procedure for Phase II Coaxial EVR Balance Dripless Nozzles

Part Number Series: VST-EVR-NBcc, VST-EVR-NBccR

cc = Scuff Guard Color Code and R = rebuilt

Vapor Systems Technologies, Inc.
650 Pleasant Valley Drive
Springboro, Ohio 45066 (USA)

Toll Free: 1-888-878-4673
Phone: 937-704-9333
Fax: 937-704-9443
www.vsthose.com

GENERAL INFORMATION

If hanging hardware components are involved in a drive-off or incur other customer abuse, each individual component must be functionally tested prior to customer dispensing activities.

INSTALLATION PREPARATION

This procedure must be followed to insure leak-proof installation and operation of these nozzles.

1. Turn off and tag the power to the dispenser. Dispenser must be de-energized prior to service to avoid personal injury.
2. Barricade work area to block vehicle access to the dispenser.
3. Close the dispenser shear valve prior to removing hanging hardware (hoses, safety breakaways, and nozzles).
4. Drain liquid product from the hanging hardware set into an approved container prior to replacing any hanging hardware components.
5. Remove hanging hardware from the dispenser prior to making replacement component assembly connections. VST recommends connecting the whip hose to the dispenser as the last connection during the hanging hardware assembly.

INSTALLATION AND FUNCTION TESTS

1. **STOP!** If this is a new facility installation, the fueling point must be flushed into an approved container before installing the nozzle. Using this nozzle to flush the system could result in foreign material becoming lodged in the nozzle's valve and cause it not to shut off.
2. Initial inspection and function tests:
   a. Carefully unpack nozzle from shipping carton.
   b. Inspect nozzle exterior for any damage.
   c. Inspect threads, lever, lever lock, spout, collection sleeve, band clamps, and face seal to determine that they are present and undamaged.
   d. Verify interlock rod alignment. Check interlock for engagement and release. Proper function of interlock rod requires the nozzle collection sleeve to be compressed ¼" to ½" and the lever to be engaged into the dispensing position. Nozzle will not function without interlock rod properly engaged.
   e. Inspect spout vent hole. It should be clear of debris.

Figure 1.

EVR Hanging Hardware Assembly

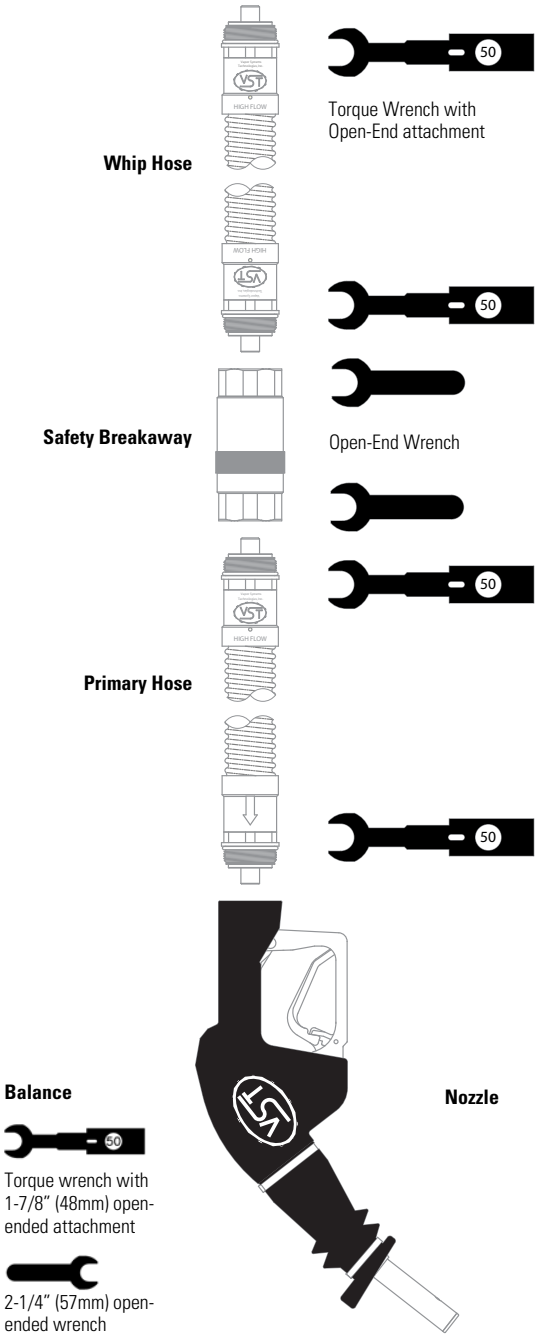

VST Installation Procedure for Phase II Coaxial EVR Balance Dripless Nozzles

Part Number Series: VST-EVR-NBcc, VST-EVR-NBccR

cc = Scuff Guard Color Code and R = rebuilt

3. Lightly lubricate **ALL** O-Rings on mating connections with petroleum jelly or other suitable lubricant. **DO NOT USE** pipe dope or thread sealant.
4. Attach nozzle onto mating hose connection and tighten by hand.
5. Tighten the nozzle connection to 50 ft-lbs of torque. **DO NOT OVER TIGHTEN.** Use a torque wrench with an open-end attachment to fit the hose couplings and an open-end wrench to properly tighten coupling connections. **DO NOT USE** channel-locks or pliers to tighten hose joints. Proper ft./lb. torque may not be achieved with these tools.
6. Purge air from the system by pumping one-tenth (1/10) to two-tenths (2/10) of a gallon of fuel into an approved container. Inspect the nozzle connection for liquid leaks and make proper adjustments at hose connection if necessary.
7. Check the nozzle shut-off action by dispensing fuel into an approved container at least three times to assure the proper automatic operation of the interlock rod. According to U/L requirement 842, the fuel flow-rate must be greater than 3 gpm for the automatic shut-off mechanism to operate.

   To test, operate the nozzle and submerge the spout tip in fuel until the fuel level covers the vent hole. The main valve of the nozzle automatically shuts off when the liquid covers the vent hole at the end of the spout. The nozzle is not designed to operate on gravity flow. The hold-open latch will disengage automatically when liquid covers the vent hole in the spout. Verify that the fuel flow stops when the nozzle collection sleeve is decompressed (e.g. interlock rod is disengaged). To test that the fuel flow stops, dispense some fuel into an approved container. Slowly remove the nozzle from the container while dispensing fuel. Fuel flow should stop when the nozzle collection sleeve is fully decompressed.
8. Measure the resistance between the dispenser outlet casting and the tip of the nozzle spout. Use an electronic multimeter set on the high range of the ohmmeter function. Resistance should not indicate more than 70,000 ohms per foot of hose. Example: The measured resistance for a 12-foot hose must not exceed 840,000 ohms (840 kilohms).

MAINTENANCE

Inspect nozzles daily for damaged component parts: vapor collection sleeve, face seal, interlock rod, spout, lever, lever lock, etc. Damaged components must be replaced. Vent hole at the end of the spout should be clear of debris. The nozzle will not operate properly if vent hole becomes clogged. The nozzle will not function properly without the interlock rod properly engaged. Keep the hose connections tight.

Should there be a drive-off or incidence of customer abuse, follow the initial inspection instructions found in the INSTALLATION section. The nozzle should be replaced when damaged. The nozzle is designed and constructed to give lasting service if properly handled and maintained. If for any reason it should need attention, contact your VST distributor for proper disposition.

NOTE

Due to abuse, misuse, changing gasoline formulas, variation in maintenance practices, environmental conditions, and/or conditions beyond the manufacturer's control, dispensing equipment may need replacement before five (5) years. Inspections and proper maintenance procedures should be followed by the station manager to determine if replacement is required before five (5) years.

WARNING

Unauthorized rebuilding or modifying of nozzles voids ALL approvals and warranties.

VST products must be used in compliance with applicable federal, state, and local laws and regulations.

If local regulatory codes prohibit use of the nozzle's hold-open clip, it must be removed prior to nozzle installation. Remove the nozzle to a safe work area.

Place the nozzle on a flat surface.

Locate the alloy rivet securing the hold-open clip and spring in the nozzle's handle. Use a drill with a 3/16" (5mm) drill bit, drill out the rivet securing the hold-open clip, and discard the clip, spring, and all other rivet debris.

Vapor Systems Technologies, Inc.
650 Pleasant Valley Drive
Springboro, Ohio 45066 (USA)

Toll Free: 1-888-878-4673
Phone: 937-704-9333
Fax: 937-704-9443
www.vsthose.com

VST Installation Procedure for Phase II Coaxial EVR Balance Nozzle Repair Kits

Part Number Series: VST-FEK-100, VST-VCK-100, VST-NSA-100

Vapor Systems Technologies, Inc.
650 Pleasant Valley Drive
Springboro, Ohio 45066 (USA)

Toll Free: 1-888-878-4673
Phone: 937-704-9333
Fax: 937-704-9443
www.vsthose.com

TOOLS

Adjustable Wrench	Narrow End Nipper
Approved Fuel Container	Torque Wrench
Wide Mouth Funnel	Vaseline (or suitable lubricant)

GENERAL INFORMATION

If hanging hardware components are involved in a drive-off or incur other customer abuse, each individual component must be functionally tested prior to customer dispensing activities.

INSTALLATION PREPARATION

This procedure must be followed to insure leak-proof installation and operation of these nozzles.

1. Turn off and tag the power to the dispenser. Dispenser must be de-energized prior to service to avoid personal injury.
2. Barricade work area to block vehicle access to the dispenser.
3. Close the dispenser shear valve prior to removing hanging hardware (hoses, safety breakaways, and nozzles).
4. Visually inspect and assess the extent of the damage to all hanging hardware components. If there are no imperfections/damages, proceed to FUNCTIONAL TEST.
5. Drain liquid product from the hanging hardware set into an approved container prior to replacing any hanging hardware components.
6. Remove hanging hardware from the dispenser prior to making replacement component assembly connections. VST recommends connecting the whip hose to the dispenser as the last connection during the hanging hardware assembly.
7. To drain nozzle, engage nozzle interlock:
   a. Push in face seal on nozzle boot assembly
   b. Hold the backend of the nozzle over an approved container
   c. Pull nozzle lever to fully drain the nozzle

VAPOR COLLECTION KIT (VST-VCK-100) REMOVAL

(See Figure 1)

1. Remove large band clamp from the Vapor Collection assembly with end nippers.
2. Pull the Vapor Collection assembly (boot) off of the clamping groove of nozzle body.
3. Pull Vapor Collection assembly off of the spout by slightly twisting to go over the spout latch ring.
4. Properly discard the removed components.

VAPOR COLLECTION KIT (VCK) REPLACEMENT

1. Place the large band clamp on the collection sleeve. (See Figure 1)
2. Check proper orientation of the interlock rod. (See Figure 2)
3. Slide VCK over the spout.
4. Align and insert the interlock rod into the interlock port. (See Figure 2)
5. Align and center all alignment marks on top of the vapor collection kit and nozzle scuff. (See Figure 1)
6. Engage interlock a few times to check for correct alignment and functionality. (See Function Test 3)
7. Tighten collection band clamp until collection sleeve will not rotate. (See Figure 1)

NOZZLE SPOUT ASSEMBLY (VST-NSA-100) REMOVAL

1. Remove Vapor Collection Assembly.
2. Loosen spout nut with smooth-jaw wrench. (See Figure 3)
   NOTE Do not use pipe wrench or locking-type pliers.
3. Once threads are completely disengaged, pull the spout straight out.

NOZZLE SPOUT ASSEMBLY (NSA) REPLACEMENT

(See Figure 3)

1. Fuel chamber should remain in the nozzle casting with the vacuum sensing tube hole oriented at the top.
2. If the fuel chamber is pulled out of the nozzle casting:
   a. Check O-ring for damage.
   b. Replace O-ring if damaged (check for cuts, nicks, etc.).
   c. Lubricate O-ring prior to re-assembly.
3. Insert fuel chamber into nozzle casting:
   a. Poppet stem with spring goes through poppet hole in the fuel chamber (center hole).

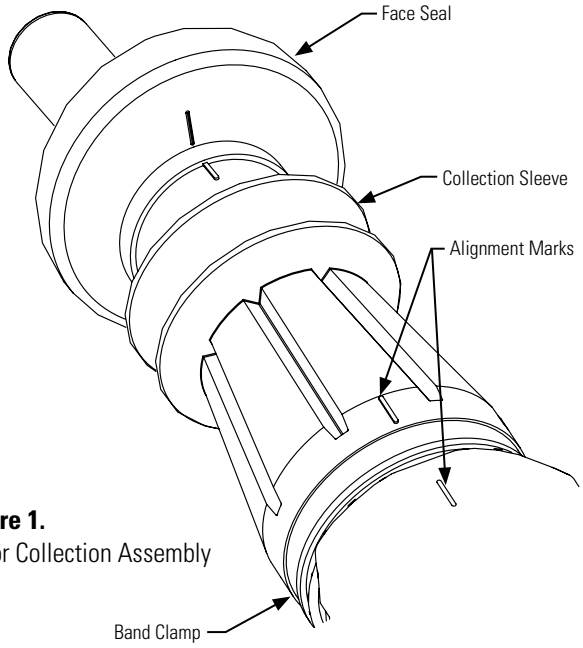

Figure 1.
Vapor Collection Assembly

VST Installation Procedure for Phase II Coaxial EVR Balance Nozzle Repair Kits

Part Number Series: VST-FEK-100, VST-VCK-100, VST-NSA-100

b. Push fuel chamber until it is flush with casting.

c. Vacuum sensing tube in the fuel chamber should be oriented at the top.

4. Lightly lubricate ALL O-rings on the spout assembly.
   NOTE Do not block vacuum sensing-tube hole with lubricant.
5. Align vacuum sensing tube with mating hole in the fuel chamber.
6. Align the anti-rotation bump on the spout with the casting notch. Be careful not to damage the spout O-rings.
7. Firmly insert spout assembly into the nozzle casting.
8. Thread spout nut onto the nozzle casting and tighten firmly. Torque to 30 foot-pounds. Spout should be tight and not able to rotate. Do not over-tighten the spout nut.
9. Once the spout is replaced, re-install the vapor collection assembly per Vapor Collection Kit Replacement instructions.

FUNCTION TESTS

1. Follow the VST Installation Procedure for each hanging hardware component. (Procedures: Section 10, 12, and 13)
2. Purge air from the system by pumping one-tenth (1/10) to two-tenths (2/10) of a gallon of fuel into an approved container. Inspect the nozzle connection for liquid leaks and make proper adjustments at the hose connection if necessary.
3. Check the nozzle shut-off action by dispensing fuel into an approved container at least three times to assure the proper automatic operation of the interlock rod. According to U/L requirement 842, the fuel flow-rate must be greater than 3 gpm for the automatic shut-off mechanism to operate.

   To test, operate the nozzle and submerge the spout tip in fuel until the fuel level covers the vent hole. The main valve of the nozzle automatically shuts off when the liquid covers the vent hole at the end of the spout. The nozzle is not designed to operate on gravity flow. The hold-open latch will disengage automatically when liquid covers the vent hole in the spout. Verify that the fuel flow stops when the nozzle collection sleeve is decompressed (e.g. interlock rod is disengaged). To test that the fuel flow stops, dispense some fuel into an approved container. Slowly remove the nozzle from the container while dispensing fuel. Fuel flow should stop when the nozzle collection sleeve is fully decompressed.
4. Measure the resistance between the dispenser outlet casting and the tip of the nozzle spout. Use an electronic multimeter set on the high range of the ohmmeter function. Resistance should not indicate more than 70,000 ohms per foot of the hose. Example: The measured resistance of a 12-foot hose must not exceed 840,000 ohms (840 kilohms).

MAINTENANCE Inspect nozzles daily for damaged components parts: vapor collection sleeve, face seal, interlock rod, spout, lever, lever lock, etc. Damaged components must be replaced. Vent hole at the end of the spout should be clear of debris. The nozzle will not operate properly if vent hole becomes clogged. The nozzle will not function properly without the interlock rod properly engaged. Keep the hose connections tight.

Should there be a drive-off or incidence of customer abuse, follow the initial inspection instructions found in the VST Installation Procedure Section 10. The nozzle should be replaced when damaged. The nozzle is designed and constructed to give lasting service if properly handled and maintained. If for any reason it should need attention, contact your VST distributor for proper disposition.

NOTE Due to abuse, misuse, changing gasoline formulas, variation in maintenance practices, environmental conditions, and/or conditions beyond the manufacturer's control, dispensing equipment may need replacement before five (5) years. Inspections and proper maintenance procedures should be followed by the station manager to determine if replacement is required before five (5) years.

WARNING Unauthorized rebuilding or modifying of nozzles voids ALL approvals and warranties.VST products must be used in compliance with applicable federal, state, and local laws and regulations. If local regulatory codes prohibit use of the nozzle's hold-open clip, it must be removed prior to nozzle installation. Remove the nozzle to a safe work area. Place the nozzle on a flat surface. Locate the alloy rivet securing the hold-open clip and spring in the nozzle's handle. Use a drill with a 3/16" (5mm) drill bit, drill out the rivet securing the hold-open clip, and discard the clip, spring, and all other rivet debris.

Figure 2.
Interlock Assembly

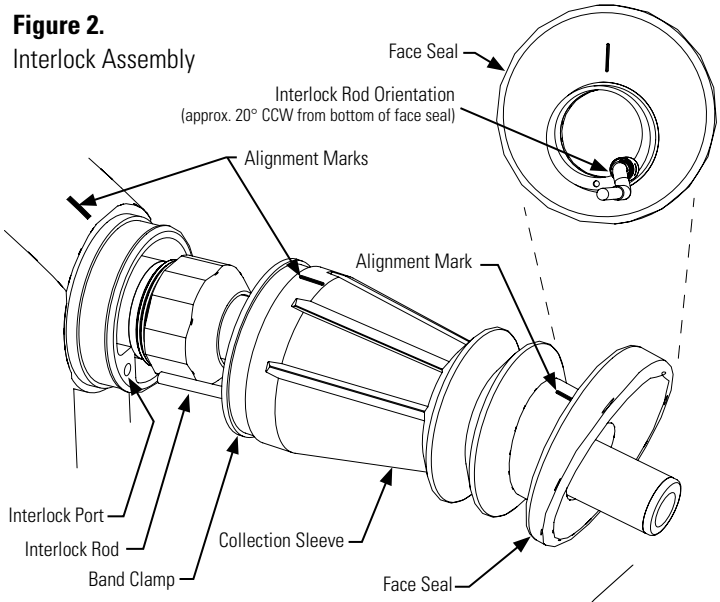

Figure 3.
Spout Assembly

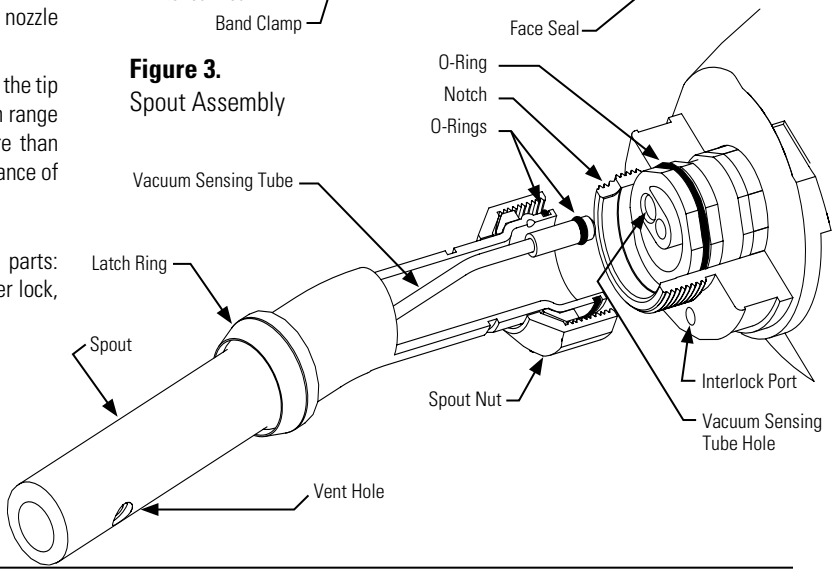

VST Installation Procedure for Phase II Coaxial EVR Balance Fuel Hoses

Part Number Series: VSTA-EVR and VDV-EVR

Vapor Systems Technologies, Inc.
650 Pleasant Valley Drive
Springboro, Ohio 45066 (USA)

Toll Free: 1-888-878-4673
Phone: 937-704-9333
Fax: 937-704-9443
www.vsthose.com

Figure 1.

EVR Balance Hanging Hardware Assembly

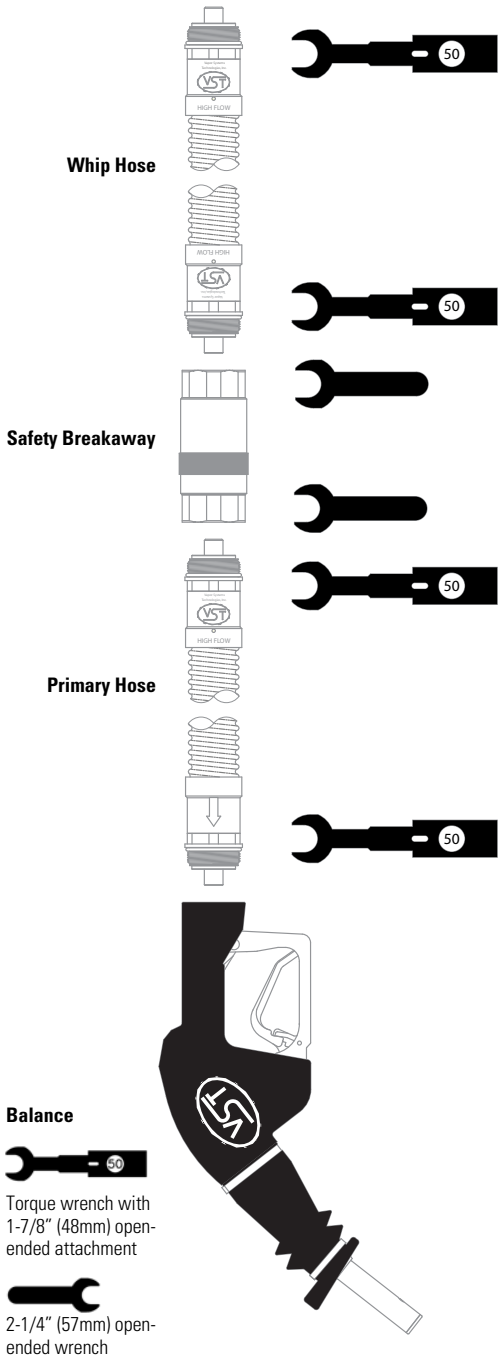

GENERAL INFORMATION

If hanging hardware components are involved in a drive-off or incur other customer abuse, each individual component must be functionally tested prior to customer dispensing activities.

INSTALLATION PREPARATION

This procedure must be followed to insure leak-proof installation and operation of these hose products.

1. Turn off and tag the power to the dispenser. Dispenser must be de-energized prior to service to avoid personal injury.
2. Barricade work area to block vehicle access to the dispenser.
3. Close the dispenser shear valve prior to removing hanging hardware (hoses, safety breakaways, and nozzles).
4. Drain liquid product from the hanging hardware set into an approved container prior to replacing any hanging hardware components.
5. Remove hanging hardware from the dispenser prior to making replacement component assembly connections. VST recommends connecting the whip hose to the dispenser as the last connection during the hanging hardware assembly.

INSTALLATION AND FUNCTION TESTS

1. Initial inspection:
   a. Carefully unpack hose from shipping carton.
   b. Inspect ALL O-Rings on each end of the hose to determine that they are present and undamaged.
   c. Inspect hose exterior for any damage.
   d. Inspect coupling threads for any damage.
2. Lightly lubricate ALL O-Rings on mating connections with petroleum jelly or other suitable lubricant. DO NOT USE pipe dope or thread sealant.
3. Insert the hose coupling into the mating connection and hand-tighten.
   NOTE Flow direction arrows on whip and primary hoses, where applicable, are indicated on hose coupling cuffs.
4. Tighten all the hose-joint connections to 50 foot-pounds of torque. DO NOT OVER TIGHTEN. Use a torque wrench with an open-end attachment to fit the hose couplings and an open-end wrench to properly tighten coupling connections. DO NOT USE channel-locks or pliers to tighten hose joints. Proper ft./lb. torque may not be achieved with these tools.
5. Purge air from the system by pumping one-tenth (1/10) to two-tenths (2/10) of a gallon of fuel into an approved container. Inspect each hose-joint connection for liquid leaks and make proper adjustments if necessary.

6. Check the nozzle shut-off action by dispensing fuel into an approved container at least three times to assure the proper automatic operation of the interlock rod. According to U/L requirement 842, the fuel flow-rate must be greater than 3 gpm for the automatic shut-off mechanism to operate.

   To test, operate the nozzle and submerge the spout tip in fuel until the fuel level covers the vent hole. The main valve of the nozzle automatically shuts off when the liquid covers the vent hole at the end of the spout. The nozzle is not designed to operate on gravity flow. The hold-open latch will disengage automatically when liquid covers the vent hole in the spout. Verify that the fuel flow stops when the nozzle collection sleeve is decompressed (e.g. interlock rod is disengaged). To test that the fuel flow stops, dispense some fuel into an approved container. Slowly remove the nozzle from the container while dispensing fuel. Fuel flow should stop when the nozzle collection sleeve is fully decompressed.
7. Measure the resistance between the dispenser outlet casting and the tip of the nozzle spout. Use an electronic multimeter set on the high range of the ohmmeter function. Resistance should not indicate more than 70,000 ohms per foot of hose. Example: The measured resistance for a 12-foot hose must not exceed 840,000 ohms (840 kilohms).

MAINTENANCE

Inspect hoses daily for damage, loose connection, or leaks. Replace as necessary. Subject to customer abuse, hose should be replaced when damaged.

The hose is designed and constructed to give lasting service if properly handled and maintained. If for any reason it should need attention, contact your VST distributor for proper disposition.

NOTE Due to abuse, misuse, changing gasoline formulas, variation in maintenance practices, environmental conditions, and/or conditions beyond the manufacturer's control, dispensing equipment may need replacement before five (5) years. Inspections and proper maintenance procedures should be followed by the station manager to determine if replacement is required before five (5) years.

WARNING Unauthorized rebuilding or modifying of hoses voids **ALL** approvals and warranties. VST products must be used in compliance with applicable federal, state and local laws and regulations.

PROCEDURE FOR POSITIONING THE LIQUID REMOVAL DEVICE

This procedure must be followed to insure proper positioning for the liquid removal device in Part Number Series: VDV-EVR (See Figure 2).

1. After installing the VST hanging hardware, hold the nozzle straight out from the dispenser so that the compressed bellows is 48 inches away from the front face of the dispenser and the spout tip of the nozzle is 30 inches above the pavement. The nozzle spout is to be at a 30-degree angle above the horizontal plane. (Simulate when the bellows is compressed in the filler neck of a vehicle.)
2. When the hose and nozzle are held in position as shown in Figure 2, the factory installed liquid removal device indicator mark on the vapor hose must be at the bottom of the loop. If the indicator mark is not at the bottom of the primary hose loop, the installer may choose one of the following options:

   Adjust the hose retractor (if installed)

   Use a different length whip hose

   Use a different length primary hose

IMPORTANT

It is the installing technician's responsibility to insure that the properly sized and marked hanging hardware is installed at the dispenser. Failure to properly install and locate the liquid removal device may reduce the effectiveness of the product in application resulting in outer hose liquid blockage and failure of the liquid removal test procedure.

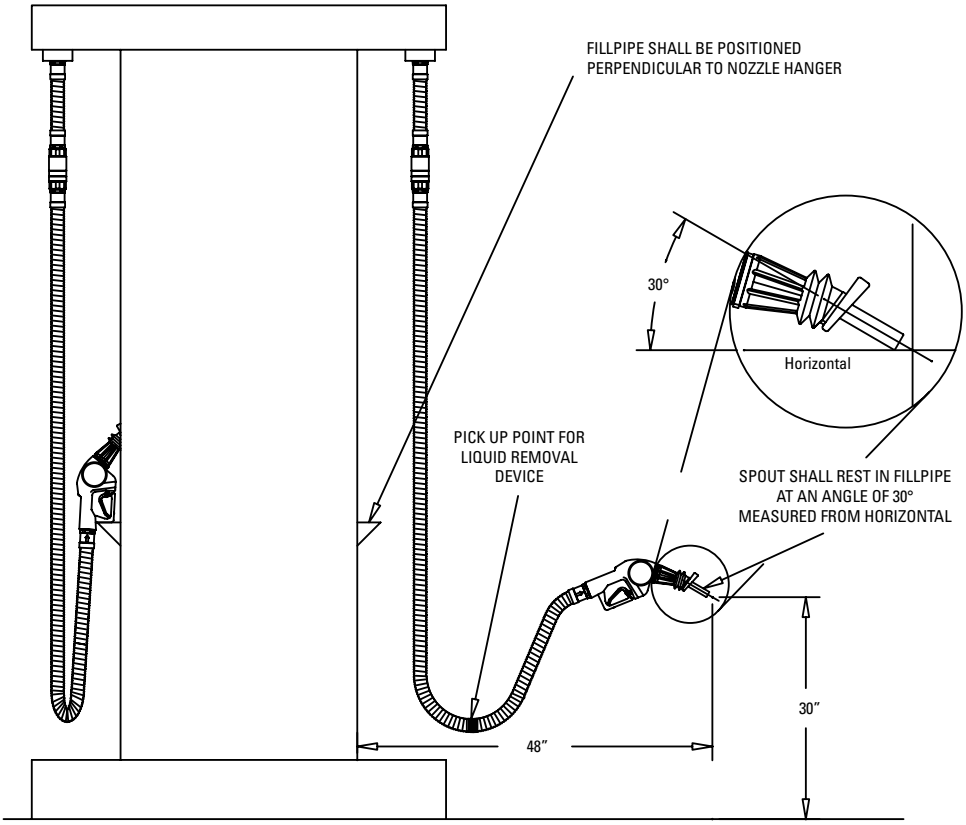

Figure 2. Procedure For Positioning the Liquid Removal Device

VST Installation Procedure for Phase II Coaxial EVR Balance Safety Breakaway Devices

NON-Reattachable Breakaway Part Number Series: VSTA-EVR

Vapor Systems Technologies, Inc.
650 Pleasant Valley Drive
Springboro, Ohio 45066 (USA)

Toll Free: 1-888-878-4673
Phone: 937-704-9333
Fax: 937-704-9443
www.vsthose.com

Figure 1.

EVR Balance Hanging Hardware Assembly

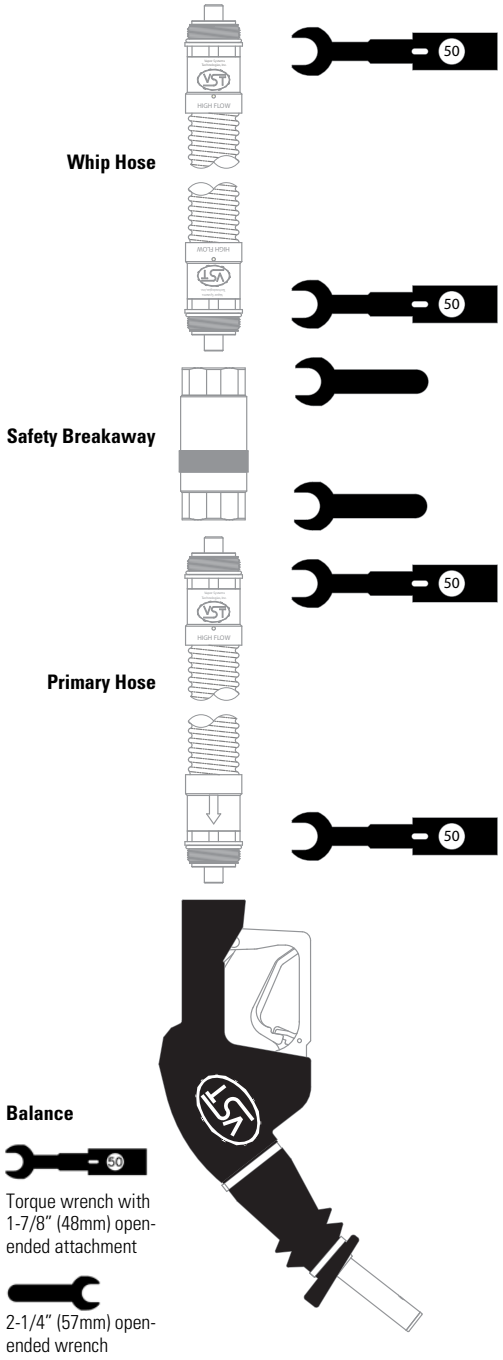

APPLICATION

These VST Safety Breakaway devices are intended to prevent damage to the dispenser and hose in the event of a vehicle drive off. These devices separate at pull forces up to 350 lbs. Prior to installation (see Installation Preparation), you will need to determine that 350 lbs. of pull force will not damage the dispenser. After verifying that the dispenser is securely bolted to the island, it can be tested by using a spring scale and a length of rope. The rope must be connected at the dispenser outlet casting, which may require a threaded bushing with a hole for attaching the rope. Attach the scale to the rope and pull to 350 lbs. in several directions. Be sure to avoid damaging the dispenser.

NOTE

a. The whip hose ALWAYS attaches to the dispenser. If a retractor is being used, the retractor clamp MUST be between the breakaway and the dispenser.

b. VST hoses are made to withstand 350 pounds tensile pull without damage. If another brand of hose is present at the dispenser, VST recommends that you contact the hose manufacturer regarding the compatibility with this breakaway device.

GENERAL INFORMATION

If hanging hardware components are involved in a drive-off or incur other customer abuse, each individual component must be functionally tested prior to customer dispensing activities.

INSTALLATION PREPARATION

This procedure must be followed to insure leak-proof installation and operation of these safety breakaway products.

1. Turn off and tag the power to the dispenser. Dispenser must be de-energized prior to service to avoid personal injury.
1. Barricade work area to block vehicle access to the dispenser.
2. Close the dispenser shear valve prior to removing hanging hardware (hoses, safety breakaways, and nozzles).
3. Drain liquid product from the hanging hardware set into an approved container prior to replacing any hanging hardware components.
4. Remove hanging hardware from the dispenser prior to making replacement component assembly connections. VST recommends connecting the whip hose to the dispenser as the last connection during the hanging hardware assembly

VST Installation Procedure for Phase II Coaxial EVR Balance Safety Breakaway Devices

NON-Reattachable Breakaway Part Number Series: VSTA-EVR

Vapor Systems Technologies, Inc.
650 Pleasant Valley Drive
Springboro, Ohio 45066 (USA)

Toll Free: 1-888-878-4673
Phone: 937-704-9333
Fax: 937-704-9443
www.vsthose.com

INSTALLATION AND FUNCTION TESTS

1. Initial inspection:
   a. Carefully unpack safety breakaway from shipping carton.
   b. Inspect safety breakaway for any damage to threads, O-Rings, exterior, etc.
2. Lightly lubricate ALL O-Rings on mating connections with petroleum jelly or other suitable lubricant. DO NOT USE pipe dope or thread sealant.
3. Attach breakaway on mating connection and tighten by hand. NOTE THE FLOW DIRECTION ARROW (where applicable). Use the hex on the breakaway body to tighten. DO NOT USE the breakaway body to tighten the unit.
4. Tighten breakaway connection to 50 foot-pounds torque. DO NOT OVER TIGHTEN. Use the hex on the breakaway body to tighten. Use a torque wrench with an open-end attachment to fit the hose couplings and an open-end wrench to properly tighten breakaway connections. DO NOT USE channel-locks or pliers to tighten connections. Proper ft./lb. torque may not be achieved with these tools.
5. Purge air from the system by pumping one-tenth (1/10) to two-tenths (2/10) of a gallon of fuel into an approved container. Inspect each hose joint connection for liquid leaks and make proper adjustments if necessary.
6. Check the nozzle shut-off action by dispensing fuel into an approved container at least three times to assure the proper automatic operation of the interlock rod. According to U/L requirement 842, the fuel flow-rate must be greater than 3 gpm for the automatic shut-off mechanism to operate.

   To test, operate the nozzle and submerge the spout tip in fuel until the fuel level covers the vent hole. The main valve of the nozzle automatically shuts off when liquid covers the vent hole at the end of the spout. The nozzle is not designed to operate on gravity flow. The hold-open latch will disengage automatically when liquid covers the vent hole in the spout. Verify that the fuel flow stops when the nozzle collection sleeve is decompressed (e.g. interlock rod is disengaged). To test that the fuel flow stops, dispense some fuel into an approved container. Slowly remove the nozzle from the container while dispensing fuel. Fuel flow should stop when the nozzle collection sleeve is fully decompressed.
7. Measure the resistance between the dispenser outlet casting and the tip of the nozzle spout. Use an electronic multimeter set on the high range of the ohmmeter function. Resistance should not indicate more than 70,000 ohms per foot of hose. Example: The measured resistance for a 12-foot hose must not exceed 840,000 ohms (840 kilohms).

MAINTENANCE

Inspect safety breakaways daily for damage, loose connections or leaks. Replace as necessary. Subject to customer abuse, safety breakaway should be replaced when damaged.

The safety breakaway is designed and constructed to give lasting service if properly handled and maintained. If for any reason it should need attention, contact your VST distributor for proper disposition.

NOTE

Due to abuse, misuse, changing gasoline formulas, variation in maintenance practices, environmental conditions and/or conditions beyond the manufacturer's control, dispensing equipment may need replacement before five (5) years. Inspections and proper maintenance procedures should be followed by the station manager to determine if replacement is required before five (5) years.

WARNING

Unauthorized rebuilding or modifying of safety breakaways voids **ALL** approvals and warranties.

VST products must be used in compliance with applicable federal, state, and local laws and regulations.

Installation Manual

ECS Membrane Processor: PMC and ISD

Part: VST ECS-CS3-310 – Three Phase
VST-ECS-CS3-110 – Single Phase

Executive Orders: VR-203
VR-204

Version: 1.0 (i)

Vapor Systems Technologies, Inc.
650 Pleasant Valley Drive
Springboro, Ohio 45066
937-704-9333 PH
937-704-9443 FX
www.vsthose.com

Table of Contents

Table of Figures 5
UL Declaration Notice 6
About VST 7
Notice 7
Warranty 8
Warranty Cards 9
Components and Warranties 10
Activating the Processor Warranty 11
VST Contractor Requirements 12
Veeder-Root Contractor Requirements 13
Safety Icons 14
Table of Terms & Abbreviations 15
1 ECS Membrane Processor Overview 16
1.1 ECS Membrane Processor Theory of Operation 16
1.2 Overview of How the Processor Operates 17
1.3 Processor Dimensions and Weight 17
1.4 Processor Components 18
1.5 Processor Auxiliary Components 19
1.6 Explanation of VST Processor Model Numbers 19
1.7 Included with the Processor Package 19
1.8 Contractor-Supplied Components for the Processor 19
2 Pre-Installation Site Survey 25
3 How the Processor is Shipped 25
4 Preparing the Processor for Installation 25
5 Pre-Installation *Processor* Leak Test 26
5.1 Safety 26
5.2 Preparation 26
5.3 Conducting the Initial Leak Check 26
6 Site Requirements 28
6.1 Regulations / Jurisdiction 28
6.2 Snapshot of Site Requirements 29

7 Ground Installation 31
7.1 Ground Installation Safety 31
7.2 Protecting the Processor 31
7.3 Ground-Mount Location 32
7.4 Setting the Concrete Pad 34
7.4.1 Processor Weight and Dimensions 34
7.5 Installing the Processor on the Concrete Pad 35
8 Roof-Top Installation 38
8.1 Roof-Top Installation Safety 38
9 Canopy Top Installation 40
9.1 Canopy Top Installation Safety 40
10 Vapor Piping 42
10.1 Vapor Piping Safety 42
10.2 Piping Connection Material 42
10.3 Piping Connections to the Processor 42
10.3.1 Flexible Connections 43
10.4 Trenching 43
10.5 Underground Vapor Piping Instructions 44
10.6 Vapor Inlet and Vapor Return Connections 49
10.6.1 Flexible Connections 49
11 Air Outlet Connection 50
11.1 Flexible Connections 51
11.2 Underground Piping Connection 55
11.3 Storage Tank Vapor Manifolds 55
11.4 P / V Valves 55
12 Electrical 56
12.1 Electrical Safety 56
12.2 Single-Phase Processor 56
12.2.1 Power Requirements for Single-Phase Electrical Service 57
12.3 Three-Phase Processor 57
12.3.1 Power Requirements for Three-Phase Electrical Service 58
12.4 Reference Information for Processor Power Requirements 59
12.5 Power for the Motors 60
12.5.1 Single-Phase Processor 60
12.5.2 Three-Phase Processor 60
12.5.3 Power for the HC Sensor in both the Single-Phase and the Three-Phase Processor 60
12.6 Power for the Heat-Trace Cables in both Single-Phase and Three-Phase Processors 61
12.7 Power for the Motor Starter Relay Coil 61
12.8 Optional Convenience Outlet at the Processor 61

13 Electrical Installation 62
13.1 Electical Safety 62
13.2 Electrical Installation Code Requirements 62
13.2.1 Single-Phase Processor Configuration 62
13.2.2 Three-Phase Processor Configuration 63
13.3 Single and Three-Phase Processors 64
13.3.1 Wiring between the Processor and components: 64
13.4 Auxiliary Output Relay 75
13.5 HC Sensor / HC Sentry 77
13.6 Multiport Card for Vapor Processor Communication 80
13.7 Veeder-Root TLS 350 with PMC or ISD Controls 82
14 Post-Installation Checklist 83

Table of Figures

Figure 1: VST Registration Card 9
Figure 2: ECS Membrane Processor Sticker 9
Figure 3: How the Processor fits into the GDF layout 20
Figure 4: Processor Piping Diagram 21
Figure 5: ECS Vent Configurations 22
Figure 6: Processor Isometric Drawing (1 of 1) 23
Figure 7: Processor Isometric Drawing (2 of 2) 24
Figure 8: Processor Inlets & Outlets 27
Figure 9: Typical Leak Check Test Fixture 27
Figure 10: ECS Membrane Processor Hazardous Locations 33
Figure 11: Concrete Mounting Pad Dimensions 36
Figure 12: Processor Ground Mounting Pad 37
Figure 13: Processor Connections with Multiple Vent Risers 45
Figure 14: Processor Connections with 2 Vent Risers 46
Figure 15: Processor Connections with Single Vent Riser 47
Figure 16: Typical GDF Vapor Piping Diagram for Processor 48
Figure 17: ECS Processor Piping Diagram 52
Figure 18: ECS Vent Configuration 53
Figure 19: Processor Piping Connections 54
Figure 20: Single-Phase Wiring Schematic 65
Figure 21: Processor Single-Phase Wiring Diagram 66
Figure 22: Processor Single-Phase ESO Wiring Diagram 67
Figure 23: Vacuum Pump: Single-Phase Motor Wiring Diagram 68
Figure 24: Blower: Single-Phase Motor Wiring Diagram 69
Figure 25: Processor Three-Phase Wiring Schematic 70
Figure 26: Processor Three-Phase Wiring Schematic 71
Figure 27: Processor Three-Phase ESO Wiring Diagram 72
Figure 28: Vacuum Pump: Three-Phase Motor Wiring Diagram 73
Figure 29: Blower: Three-Phase Motor Wiring Diagram 74
Figure 30: VR TLS Multi-Port Card Connection to HC Sentry Module 76
Figure 31: HC Sentry Front & Back Views 77
Figure 32: HC Sentry and HC Sensor Wiring Diagram 78
Figure 33: HC Sensor and HC Sentry Pictures 79
Figure 34: VR TLS Multi-Port Card Connection to the HC Sentry Module 80
Figure 35: HC Sentry RS-485 Cable Wiring Diagram 81
Figure 36: VR TLS-350 82

UL Declaration Notice

- Acceptability of the installation of the Vapor *Processor* and all associated piping, fittings, controls, etc. is not covered under the UL Listing of the ECS Membrane *Processor*.

- NOTE: All peripheral equipment required to activate / control these units is not covered under the UL Listing of this ECS Membrane *Processor*.
  - ► They should be UL Listed, have the appropriate communications protocol, not installed over or in a hazardous location, and are determined to be acceptable to the authority having jurisdiction with regards to suitability and overall installation.

About VST

Vapor Systems Technologies, Inc. began in 1989 with the vision of One Company – One Integrated Solution.

Today, that philosophy is still in place and getting stronger. Recognizing that a healthier environment is a need and not an option, VST has dedicated its undivided attention to the ever-changing, stringent regulations that govern fugitive vapors at gasoline dispensing facilities (GDF). To this challenge, VST is committed to a continual R&D campaign of developing the most current, technologically advanced solutions to service not only the United States, but also the world.

VST specializes in the development, engineering, and manufacturing of products that are sold into the GDF segment of the petroleum industry. The VST focus provides our customers and users with exceptional products, services, and innovative solutions for improving the fueling-station experience as well as the world's air quality.

VST's product offering includes curb pump and vapor recovery hoses, safety breakaways, nozzles, and emission-control system *Processor*s. The ENVIRO-LOC™ vapor-recovery product offering represents the most innovative concept in the industry for trapping fugitive vapors from the front end (vehicle refueling) to the back end (vent risers) of the GDF site.

Notice

Vapor Systems Technologies, Inc. shall not be liable for errors contained herein or for incidental or consequential damages in connection with the furnishing, performance, or use of this publication.

No part of this publication may be translated to another language without the prior written consent of Vapor Systems Technologies, Inc.

Warranty

- The warranty is conditional on whether the *Processor* was installed by a VST ASC Level B or a VST Level C.
- 12-month warranty becomes effective at the time of installation. If this card is not returned, the warranty becomes effective from the date of shipment at VST.
- VST cannot be held responsible for damage to the *Processor* or the *Processor* equipment (inclusive) due to acts of nature, vandalism, or neglect.
- Membranes exposed to gasoline (liquid) due to an overfill or any other reason voids the membrane warranty.
- VST products are warranted to be free of defects in material and workmanship.
- Liability under any expressed or implied warranty is limited to replacement of the product.
- Use of VST products on non-UL Listed systems, or use which falls outside intended field of use, voids any stated or implied warranty.
- VST is not responsible for misuse of, nor improperly installed, products.
- In the event of a warranty claim, the purchaser must obtain a copy of the Return Goods Authorization (RGA) prior to returning product to insure proper processing. Return shipping charges are the responsibility of the customer.
- Warranty status will be determined within 30 days of the return of suspected items.
- VST provides for a warranty program in conjunction with VST's exclusive serial number tracking system.
- Each VST product carries a unique serial number and warranty tracking card.
- Requests for warranty shall be through VST's Return Goods Authorization (RGA) procedure. Call VST at 937-704-9333.
- This warranty does not cover any components exposed to contact with fuels more than 5% menthanol, 10% ethanol, 15% MTBE by volume or any exposure to M85 / E85 fuel.

Warranty Cards

Vapor Systems Technologies, Inc.

Phone: (937)-704-9333 • Fax: (937)-704-9443
www.vsthose.com

IMPORTANT
PRODUCT WARRANTY
REGISTRATION CARD

12 MONTH WARRANTY BECOMES EFFECTIVE AT TIME OF INSTALLATION. IF THIS CARD IS NOT RETURNED, WARRANTY BECOMES EFFECTIVE FROM DATE OF SHIPMENT FROM VST.

THE MAXIMUM WARRANTY LIFE IS 18 MONTHS FROM DATE OF SHIPMENT.

PLEASE CALL VST IF THIS PRODUCT IS BEING USED AS A REPLACEMENT. REPLACEMENT WITH A NON VST PRODUCT VOIDS ANY WARRANTY.

SERIAL NUMBER:
INSTALLATION DATE:
INSTALLATION SITE:
CITY/STATE/ZIP:
DISTRIBUTOR NAME:
PRODUCT STYLE:
☐ HOSE ☐ SAFETY BREAKAWAY
☐ NOZZLE ☐ ECS PROCESSOR

Figure 1: VST Registration Card

NOTICE: THIS TAG MUST NOT BE REMOVED FOR ANY REASON

ECS MEMBRANE PROCESSOR UNIT

Serial Number: _____

Date Installed: _____

This device was factory tested and met all applicable performance standards and specifications to which it was certified.

Manufactured By: Vapor Systems Technologies, Inc.
650 Pleasant Valley Dr., Springboro, Ohio 45066
Phone: (937) 704-9333, Fax: (937) 704-9443

Figure 2: ECS Membrane Processor Sticker

Components and Warranties

PART #	DESCRIPTION	WARRANTY
5001-001	Vacuum Pump/Three-Phase Motor - Shipped with Three-Phase *Processor*	1 year
5001-002	Vacuum Pump/Single-Phase Motor - Shipped with Single-Phase *Processor*	1 year
5001-003	Vacuum Pump Drive Coupling Rubber Insert	1 year
5002-001	Circulating Blower / Three-Phase Motor - Shipped with Three-Phase *Processor*	1 year
5002-002	Circulating Blower / Single-Phase Motor - Shipped with Single-Phase *Processor*	1 year
5003-001	Check-Valve Assembly	1 year
5005-001	Membrane	1 year
5006-001	Membrane Housing, Complete	1 year
5006-011	O-Ring (2) Vertical Tube	1 year
5006-012	O-Ring (2) Base Insert	1 year
5006-013	O-Ring (2) Membrane	1 year
5007-004	Hydrocarbon Sensor	1 year
5008-001	Heat-Trace Cable	1 year
5008-002	Heat Trace Power Connection Kit	1 year
5008-003	Heat Trace End Seal Kit	1 year
5010-001	ECS Aluminum Cover	1 year
5012-100	Membrane Tubing	1 year
5012-101	Blower Inlet Tubing	1 year
5012-102	Blower Outlet Tubing	1 year
5012-103	Vacuum Pump Inlet Tubing	1 year
5012-104	Vacuum Pump Outlet Tubing	1 year
5012-105	HC Return Tubing	1 year
5012-106	HC Inlet Tubing	1 year
5012-107	Membrane Outlet Tubing	1 year
5013-001	Insulation	1 year
5015-001	HC Sentry Unit	1 year
5015-002	HC Sentry Interface Cable	1 year

Activating the Processor Warranty

Follow this process to activate the warranty on your *Processor.*

1. Make sure you have all the warranty paperwork. You should have:
   - ► A Warranty Card – See figure 1: 14-1.
   - ► A Post–Installation ChecklistA Post-Installation Power-Up Checklist.
2. Complete the Warranty Card
   - ► Completely fill out the card
   - ► Get the serial number of your *Processor* from the ECS Membrane Processor Sticker – See figure 2: 14-2.
   - ► Make a copy of the card for your files.
   - ► Place the completed, original card in an envelope for return mailing to VST.
3. Be sure the contractor who installs the *Processor* fills out the Post Installation Checklist.
   - ► Go over the form to be sure the contractor has filled it out completely and signed the form.
   - ► Make 2 copies of the form:
     - ▪ Original goes to VST.
     - ▪ One copy stays with the GDF.
     - ▪ One copy goes to the contractor.
   - ► Place the completed, original form in an envelope for return mailing to VST.
   - ► Give one copy to the contractor.
   - ► Place a copy in your files.
4. Be sure the contractor who performs the *Processor's* initial Power-Up fills out the Post-Installation Power-Up Checklist
   - ► Go over the form to be sure the contractor has filled it out completely and signed the form.
   - ► Make 2 copies of the form:
     - ▪ Original goes to VST.
     - ▪ One copy stays with the GDF.
     - ▪ One copy goes to the contractor.
   - ► Place the completed, original form in an envelope for return mailing to VST.
   - ► Give one copy to the contractor.
   - ► Place a copy in your files.
5. Seal the envelope and mail the three forms to VST:
   - ► The completed Warranty Card.
   - ► The completed and signed Post-Installation Checklist.
   - ► The completed and signed Post-Installation Power-Up Checklist.
   - ► The VST mailing address is:
     Vapor Systems Technologies, Inc.
     650 Pleasant Valley Drive
     Springboro, OH 45066

VST Contractor Requirements

Due to the highly volatile nature of gasoline and its handling and storage, VST requires the following certifications for its ASC's:

Level	Component	Authorized Tasks	Training Pre-Requisites
A Must be re-certified every two years	Hanging Hardware	Functional Testing Installation Maintenance Repair	No pre-requisite
A/B Must be re-certified every two years	Hanging Hardware	Functional Testing Installation Maintenance Repair	No pre-requisite
	Membrane *Processor*	Installation	Veeder-Root Level 1, 2/3, or 4 ASC certification
C Must be re-certified every two years	Membrane *Processor*	Annual Testing Component Replacement Maintenance Operation Post-Installation Power-Up Testing Start-Up Testing Troubleshooting	VST Level "A/B" Veeder-Root UST Monitoring Systems Level 2/3 or 4 Veeder-Root ASC w/VST PMC/ISD certification
NOTE: Depending on local codes, in addition to the VST and Veeder-Root training, contractors may be required to take air-district training or ICC certification as an approved vapor-recovery installer.			

- ASC's must be able to show proof of certification if asked. Carry the wallet card or have a copy of your certification on file with the GDF.
- The ASC must record his or her certification number on the applicable paperwork for all warranties to be deemed valid.
- Contractors should ALWAYS verify the training and certification requirements with the air-district staff BEFORE beginning installation of EVR systems.

Veeder-Root Contractor Requirements

Veeder-Root Level 1	Contractors holding valid Level 1 Certification are approved to perform wiring and conduit routing, equipment mounting, probe and sensor installation, tank and line preparation, and line leak detector installation.
Veeder-Root Level 2/3 or 4	Contractors holding valid Level 2, 3, or 4 certifications are approved to perform installation checkout, startup, programming and operations training, troubleshooting and servicing for all Veeder-Root Tank Monitoring Systems, including Line Leak Detection and associated accessories.
PMC / ISD	This course of training includes In-Stations Diagnostics/Pressure Management Control (ISD/PMC) installation checkout, startup, programming, and operations training. It also includes troubleshooting and service techniques for the Veeder-Root In-Station Diagnostics system. A current level 2/3 or 4 certification is a prerequisite for the ISD/PMC course. After successful completion of this course the contractor will receive a certificate as well as a Veeder-Root ISD/PMC contractor certification card.
Warranty Registrations may only be submitted by selected distributors.	

Safety Icons

	ELECTRICITY A potential shock hazard exists. High voltage is supplied to and exists in this device.		TURN POWER OFF Turn power off to the device and its accessories when installing and servicing the unit. Live power creates a potential spark hazard.
	EXPLOSIVE Gasoline and its vapors are extremely explosive if ignited.	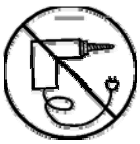	NO POWER TOOLS Sparks from electric power tools can ignite gasoline and its vapors.
	FLAMMABLE Gasoline and its vapors are extremely flammable.		NO PEOPLE IN THE AREA Unauthorized people in the work area during installation and service of the device create a potential for personal injury.
	NO SMOKING Gasoline and its vapors can be ignited by sparks and embers of burning cigarettes.		READ ALL RELATED MATERIALS Read, understand, and follow all instructions, warnings, and requirements before you begin work.
	NO OPEN FLAMES Open flames from sources like lighters and matches can ignite gasoline and its vapors.		USE SAFETY BARRICADES Unauthorized people in the work area during installation and service of the device create a potential for personal injury. Therefore, always isolate your work area by using safety cones, barricades, etc.
	PINCH RISK Stay clear. Keeps hands and tools away from rotating machinery and moving parts.		ROTATING MACHINERY Stay clear. Keep hands and tools away from rotating machinery.

Table of Terms & Abbreviations

ASC:	Authorized Service Contractor
AQMD:	Air Quality Management Districts
ATG:	Automatic Tank Gauge
CARB:	California Air Resources Board
CDFA:	California Department of Food & Agriculture
CVLD:	Continuous Vapor Leakage Detection, another name for Vapor Leak Detection
ECS:	Emissions Control System
EO:	Executive Order
EVR:	Enhanced Vapor Recovery
GDF:	Gasoline Dispensing Facility
HC:	Hydrocarbon
HC IR:	Hydrocarbon Infrared
ISD:	In-Station Diagnostics
MAG Probe:	A type (brand) of Tank Inventory Probe
NEC:	National Electric Code
NFPA:	National Fire Protection Association
ORVR:	On-Board Refueling Vapor Recovery
OSHA:	Occupational Safety Health Administration
Permeate:	Air return to atmosphere
PLC:	Programmable Logic Control
PMC:	Pressure Management Control
Retentate:	Vapor return to UST
RVP:	Reid Vapor Pressure
TLS:	Tank Level System
TLS Console:	Veeder-Root's line of environmental monitoring consoles.
TS:	Troubleshooting
Ullage:	Vapor space above liquid in a UST
UST:	Underground Storage Tank
VCK:	Vapor Collection Kit
Veeder Root:	Manufacturer of the TLS-350
VOC:	Volatile Organic Compounds
VST:	Vapor Systems Technologies, Inc. - manufacturer of the ECS Membrane *Processor*
WC:	Water Column

1 ECS Membrane Processor Overview

1.1 ECS Membrane Processor Theory of Operation

- The VST ECS membrane *Processor* does not interact directly with the other balance system hardware. It is in place to monitor and control the pressure in the UST to within limits specified by CARB.

  Under conditions where the GDF is operational and the balance system hardware is functioning normally, the inherent ORVR compatibility of the balance system (when using VST's ENVIRO-LOC nozzle) will produce a predominately negative gauge pressure in the ullage space of the UST. Under these conditions the ECS membrane *Processor* will typically not need to operate.

  During periods of less activity, the GDF being shut down overnight, winter fuels being present, or other conditions that promote the pressurization of the ullage space, the ECS membrane *Processor* will operate as needed to control the pressure in the ullage space to an accepted level. The ECS membrane *Processor* will turn on at an ullage pressure of +0.20 inches of water and turn it off at a pressure of –0.20 inches of water. Currently, the ECS membrane *Processor* unit is monitored and controlled through the PMC or ISD software.

- The ECS membrane *Processor* uses a type of membrane technology to enable it to selectively separate the components in the ullage vapor mixture.

  Through a somewhat complex transport means, certain molecules will selectively travel in a stream from one side of the membrane to the other. This stream is referred to as the permeate stream.

  In this case, predominate molecules transported across the membrane will be the primary constituents of air, which are oxygen, nitrogen, and water vapor. A small amount of the hydrocarbons present in the ullage mixture will also migrate across the membrane. Typically, permeate will contain less than 3.0% hydrocarbons. The result of this activity includes, fresh air vented to atmosphere, hydrocarbon vapors returned to the UST, and UST pressurization controlled to an acceptable level.

- The process of separation by the membrane is made possible by using two pumps, one low-pressure pump which circulates the ullage vapor mixture along one side of the membrane, and one high-vacuum pump, which creates the pressure differential needed to cause the permeate transport across the membrane. These are the only moving parts in the system.

1.2 Overview of How the Processor Operates

- The Processor is a technology created for Gasoline Dispensing Facilities (GDF) to assist them in reducing the number of harmful emissions released to the atmosphere through the natural occurrence of gasoline vaporization.

- The table below lists the steps that the Veeder-Root TLS 350 and the software takes to control the Processor.

1.	• When the UST system pressure rises above +0.2"WC, the *Processor* turns ON.
2.	• Through the vapor inlet pipe connection at the *Processor*, the VOC vapor is drawn into the suction side of the blower.
3.	• The blower discharges the VOC vapor into the membrane housing.
4.	• Inside the membrane housing, the VOC vapor is separated in to two air streams: ► VOC depleted air (referred to as "air") ► Gasoline VOC vapor • The membrane is designed specifically for separating air from gasoline VOC vapor.
5.	• A vacuum pump draws the air from the membrane housing through a check valve.
6.	• A sample of the air flows through a hydrocarbon sensor to check the percent hydrocarbons.
7.	• From the vacuum pump, the air is vented to atmosphere via the air return.
8.	• The gasoline VOC vapor returns to the UST system via the vapor return.
9.	• When the UST system pressure drops below -0.2"WC, the *Processor* turns OFF.

1.3 Processor Dimensions and Weight

Part Number	Unit	Dimensions	Weight
VST-ECS-CS3-110	Single-Phase	L-39" x W-27" x H-43" Height includes 18" legs	385 lbs. Includes 24-lb. cover
VST-ECS-CS3-310	Three-Phase	L-39" x W-27" x H-43" Height includes 18" legs	350 lbs. Includes 24-lb. cover

1.4 Processor Components

PART #	DESCRIPTION
5001-001	Vacuum Pump/Three-Phase Motor - Shipped with Three-Phase *Processor*
5001-002	Vacuum Pump/Single-Phase Motor - Shipped with Single-Phase *Processor*
5001-003	Vacuum Pump Drive Coupling Rubber Insert
5002-001	Circulating Blower / Three-Phase Motor - Shipped with Three-Phase *Processor*
5002-002	Circulating Blower / Single-Phase Motor - Shipped with Single-Phase *Processor*
5003-001	Check-Valve Assembly
5005-001	Membrane
5006-001	Membrane Housing, Complete
5006-011	O-Ring (2) Vertical Tube
5006-012	O-Ring (2) Base Insert
5006-013	O-Ring (2) Membrane
5007-004	Hydrocarbon Sensor
5008-001	Heat-Trace Cable
5008-002	Heat Trace Power Connection Kit
5008-003	Heat Trace End Seal Kit
5010-001	ECS Aluminum Cover
5012-100	Membrane Tubing
5012-101	Blower Inlet Tubing
5012-102	Blower Outlet Tubing
5012-103	Vacuum Pump Inlet Tubing
5012-104	Vacuum Pump Outlet Tubing
5012-105	HC Return Tubing
5012-106	HC Inlet Tubing
5012-107	Membrane Outlet Tubing
5013-001	Insulation

1.5 Processor Auxiliary Components

PART #	DESCRIPTION
5015-001	HC Sentry Interface Module w/24VDC power supply
5015-002	HC Sentry Interface Cable

1.6 Explanation of VST Processor Model Numbers

- The GDF owner can choose the model number of the *Processor* based on the electrical availability at the GDF.
  - ► All the electrical requirements are the same, except for the motors, where the choice is between single-phase and three-phase power.
- There are two choices of Processors:
  - ► VST-ECS-CS3-110: Single-Phase: The single-phase refers to the motor requirements.
  - ► VST-ECS-CS3-310: Three-Phase: The three-phase refers to the motor requirements.

1.7 Included with the Processor Package

- ECS Membrane Processor
- Bolted to a skid
- (4) 18” attached legs
- Attached aluminum cover
- Packaged with the processor in a separate, smaller box:
  - ► HC Sentry Module
  - ► 24-volt Power Supply
  - ► HC Sentry Interface Cable
- Owner package with warranty paperwork to be filled out and returned to VST in order to activate the warranty

1.8 Contractor-Supplied Components for the Processor

NOTE:
This is not an exhaustive list. There may be more components the contractor will have to supply.

• Motor Starters • Ball Valves • Tees • Piping • Pipe Fittings • Electrical • Electrical Fittings • Conduit	• Lockable Disconnect • Wires • Electrical Seal-Offs • Concrete • Veeder-Root TLS-350 • Veeder-Root PMC or ISD Software • Veeder-Root Pressure Sensor • Veeder-Root Flow Meters (ISD only)

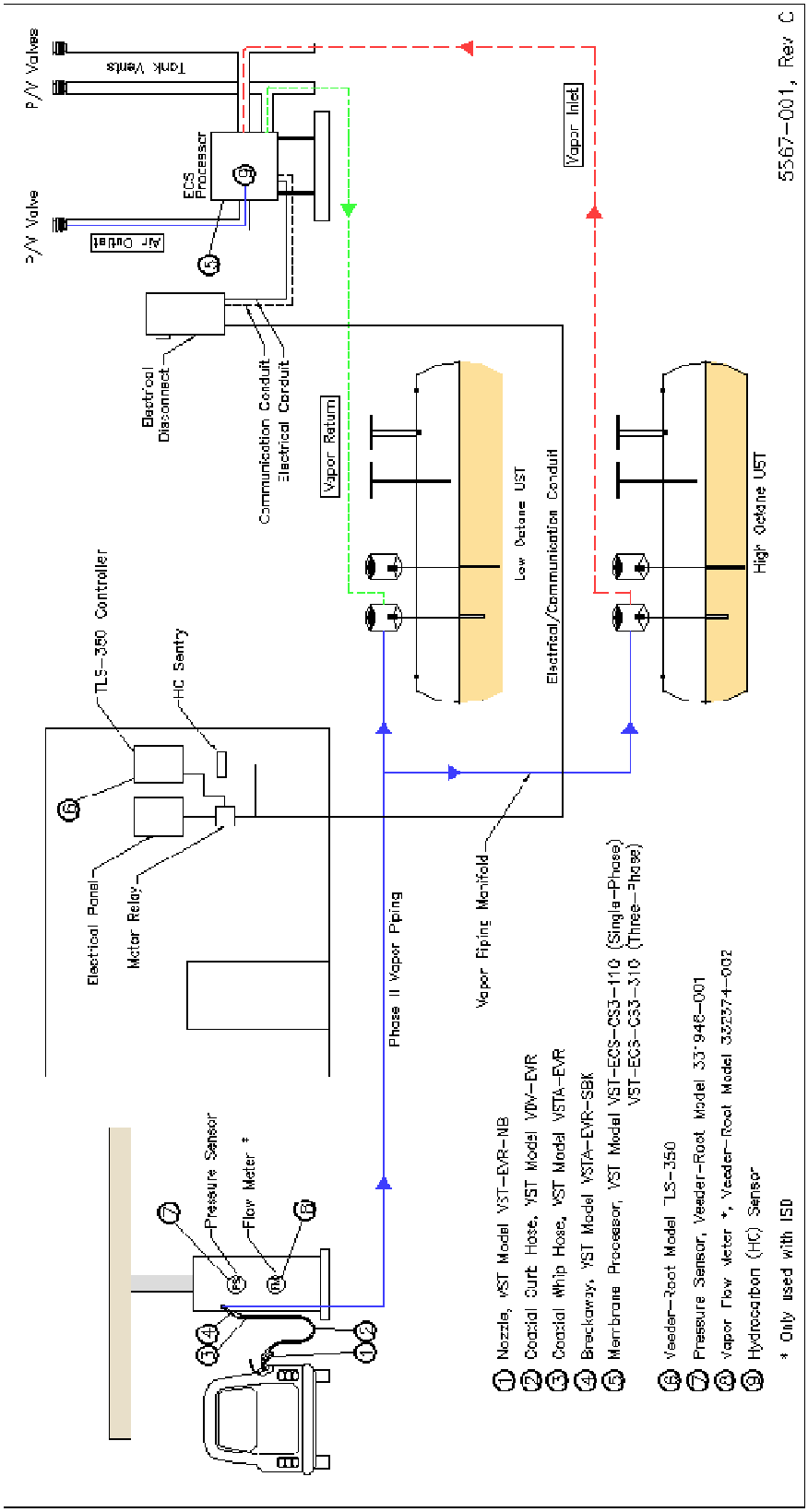

Figure 3: How the Processor fits into the GDF layout

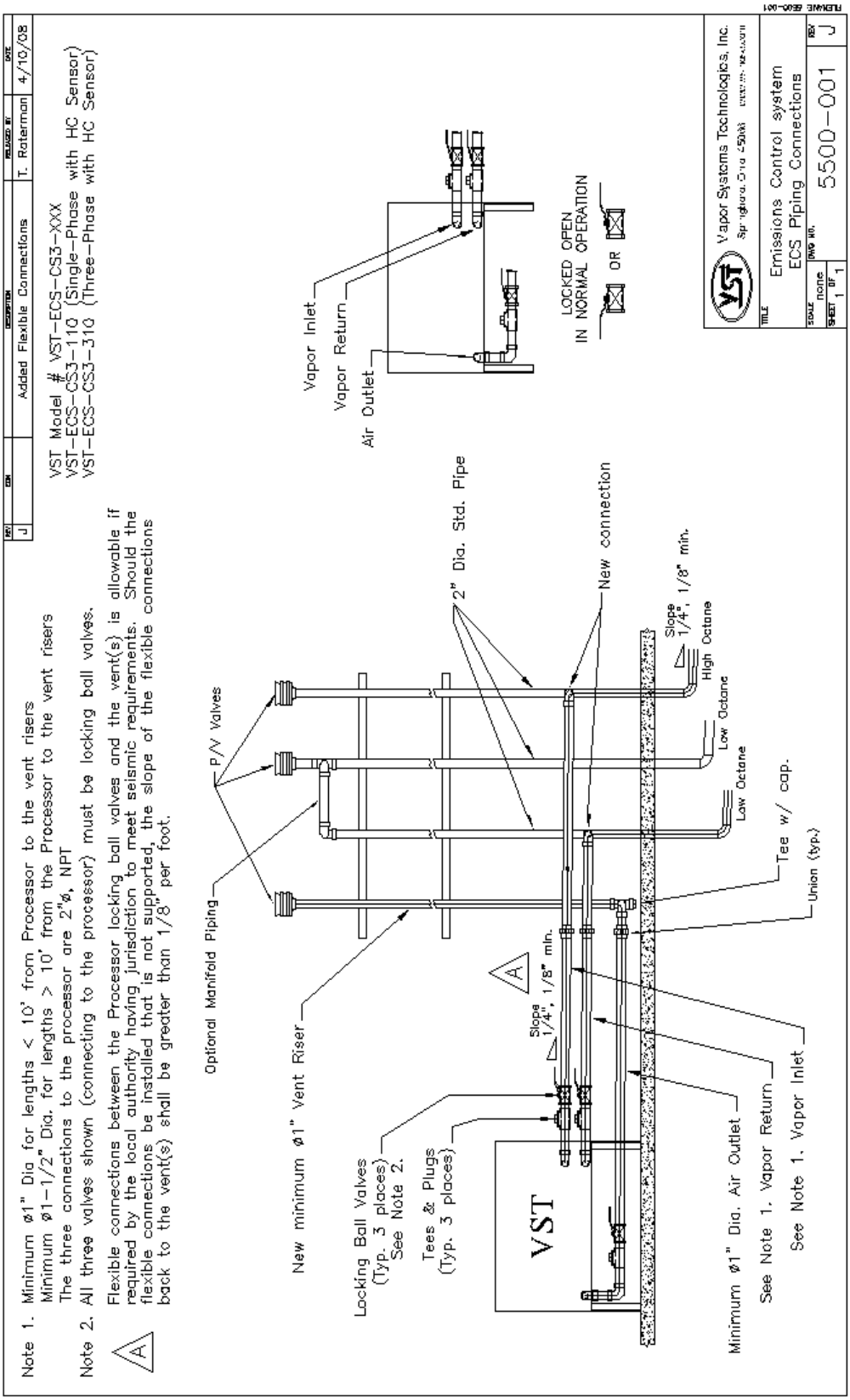

Figure 4: Processor Piping Diagram

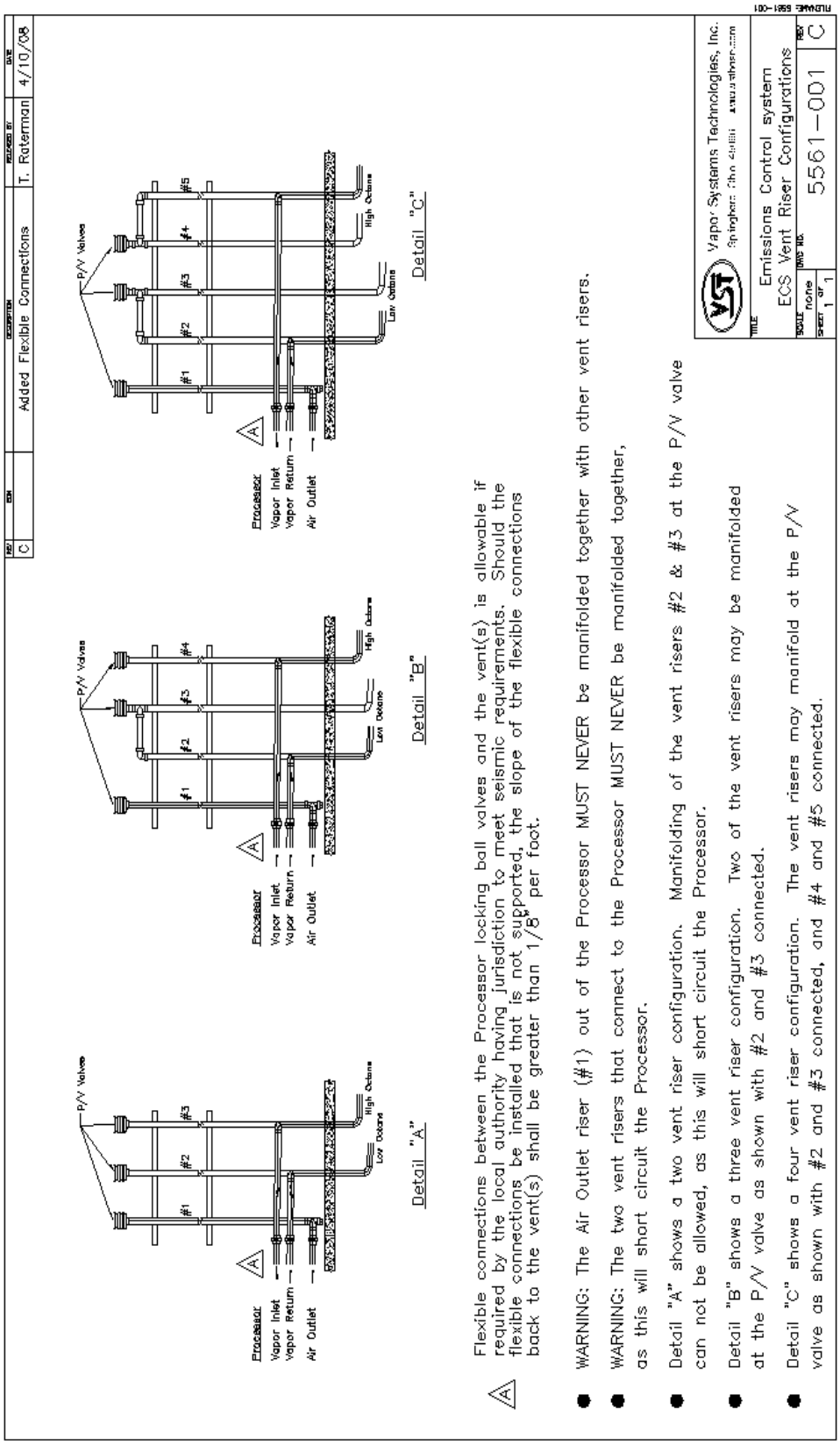

Figure 5: ECS Vent Configurations

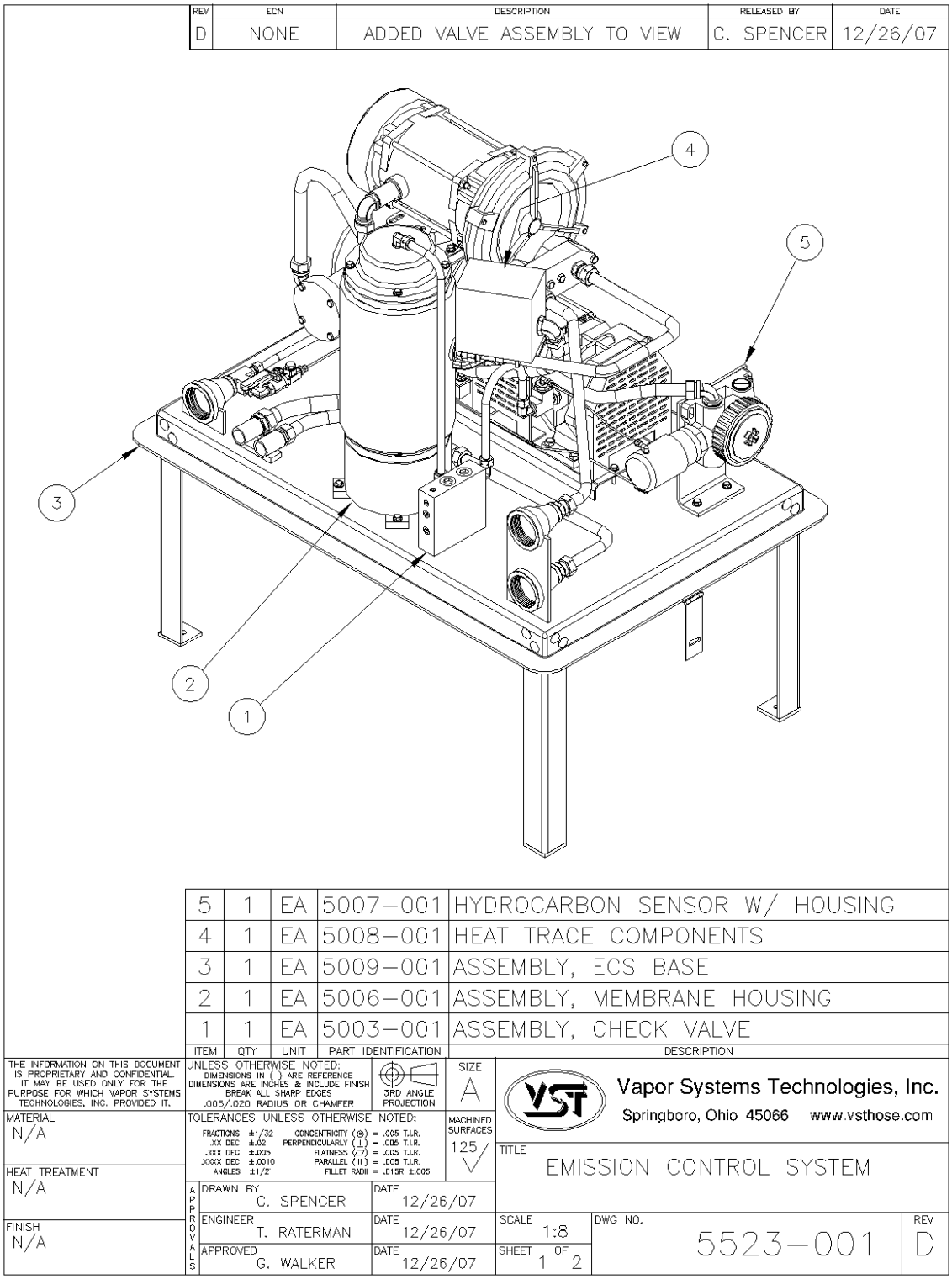

Figure 6: Processor Isometric Drawing (1 of 2)

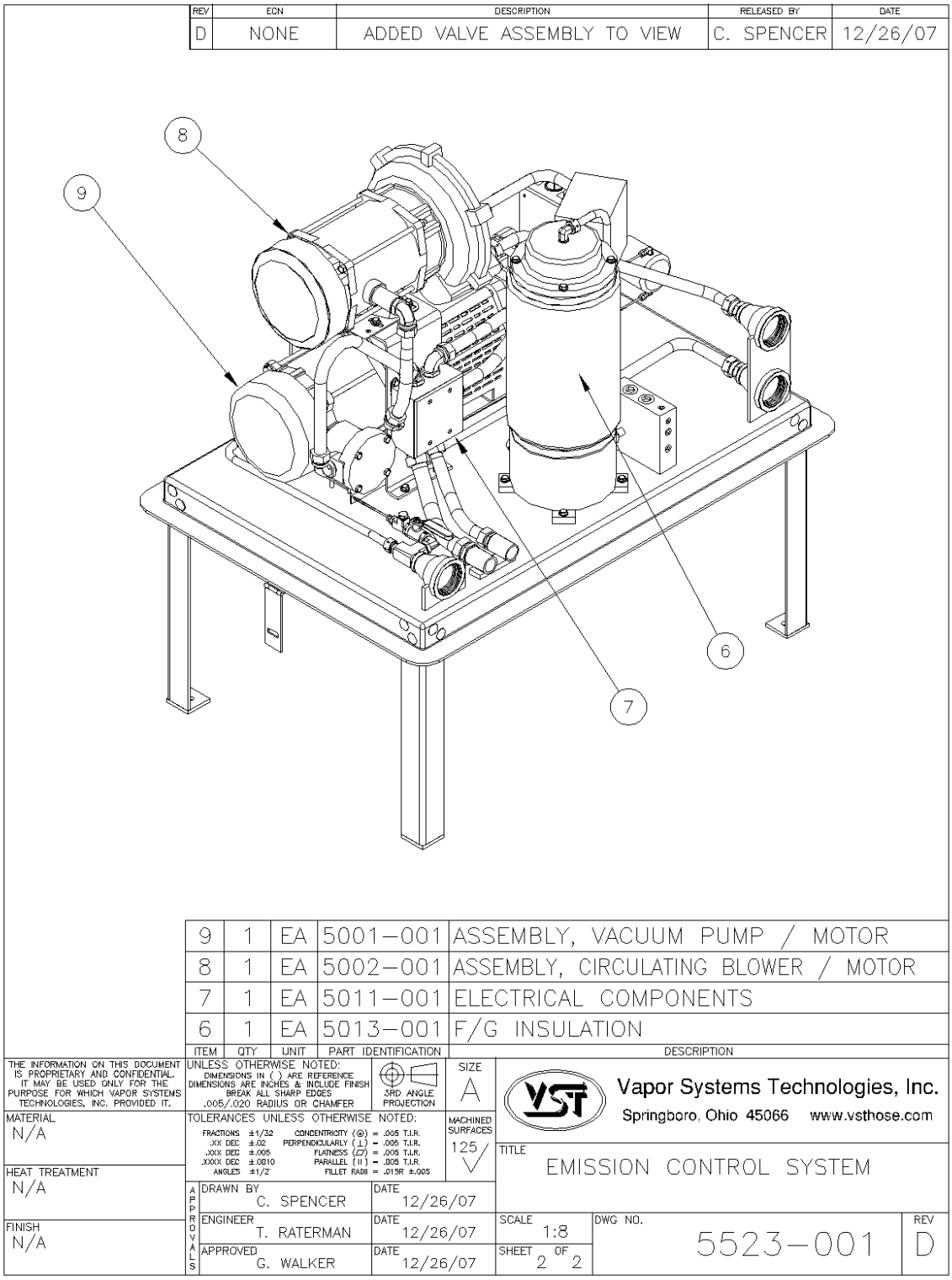

Figure 7: Processor Isometric Drawing (2 of 2)

2 Pre-Installation Site Survey

Vapor Systems Technologies, Inc. created a "Pre-Installation Site Survey," as a guide to help certified installers and troubleshooters in the planning of an ECS Membrane *Processor* installation.

The "Pre-Installation Site Survey" is to be completely filled out in advance of an installation so that installation problems and delays are reduced or avoided.

You will find the "Pre-Installation Site Survey" on our website at www.vsthose.com.

3 How the Processor is Shipped

- The Processor is shipped with the following:
  - ECS Membrane Processor
  - Bolted to a skid
  - (4) 18" attached legs
  - Attached aluminum cover
  - HC Sentry Module
  - 24-volt power supply
  - HC Sentry Interface Cable
  - Owner package with warranty paperwork to be filled out and returned to VST in order to activate the warranty

4 Preparing the Processor for Installation

- Follow these steps to prepare the Processor for installation:

1. Verify that all the items are in the shipping crate.
2. Visually inspect all the items for any obvious damage.
3. Before mounting the *Processor*, conduct the Pre-Installation *Processor* Leak Test.

Be sure to conduct a Pre-Installation *Processor* Leak Test before mounting the *Processor* to verify that the *Processor* is leak tight.

5 Pre-Installation *Processor* Leak Test

5.1 Safety

- The purpose of the pre-installation leak check is to insure that all of the tubing fittings and tubes located inside the *Processor* are leak-free prior to installation.

5.2 Preparation

Follow these steps to prepare the *Processor* for the pre-installation leak check after the *Processor* is delivered to the GDF where it will be installed. Prior to installation:

1. Remove the packaging from the skid.
2. Optional: Remove the *Processor* from the skid.
3. Remove the cover from the *Processor.*
4. Place 2" NPT plugs in two of the pipe connection openings: See figure 8: 14-27.
    - VST recommends placing the plugs in the Vapor Inlet and Vapor Return locations.
    - The third 2" NPT pipe opening (Air Outlet) will be used for testing.

5.3 Conducting the Initial Leak Check

1. Install a 2" NPT pipe plug in the empty 2" pipe connection on the *Processor:*
    - This plug must have a ¼" NPT tapped hole for attaching the nitrogen air line.
2. The leak check is conducted with 1.0 to 2.0 PSI nitrogen.
3. A pressure regulator must be used either on the compressed nitrogen bottle or at the ¼" NPT fitting where the nitrogen is connected. See figure 9: 14-27.
4. Slowly pressurize the *Processor* to a maximum of 2.0 PSI compressed nitrogen.

<u>CAUTION: PRESSURIZING THE *PROCESSOR* OVER A MAXIMUM OF 5.0 PSI MAY CAUSE DAMAGE TO THE *PROCESSOR* O-RINGS AND/OR PUMP SEALS, WHICH WILL VOID ALL WARRANTIES OF THE *PROCESSOR*</u>

5. With the *Processor* pressurized between 1.0 to 2.0 PSI compressed nitrogen, spray a soapy solution on each fitting to check for bubbles:
    - If bubbles do not appear, the connection is tight.
    - If bubbles do appear, tighten the leaking fitting 1/8" turn and re-check for leaks.
    - If the fitting cannot be tightened so that the connection is leak free, replace the 45° flare tube assembly that is leaking with a new tube assembly.
6. Continue this process until all the internal tube fittings have been checked and found leak free.
7. Remove the compressed nitrogen connection to the *Processor*.
8. Once this test is complete, remove the three 2" NPT plugs previously installed.
9. The Processor is now ready to install.

Figure 8: Processor Inlets & Outlets

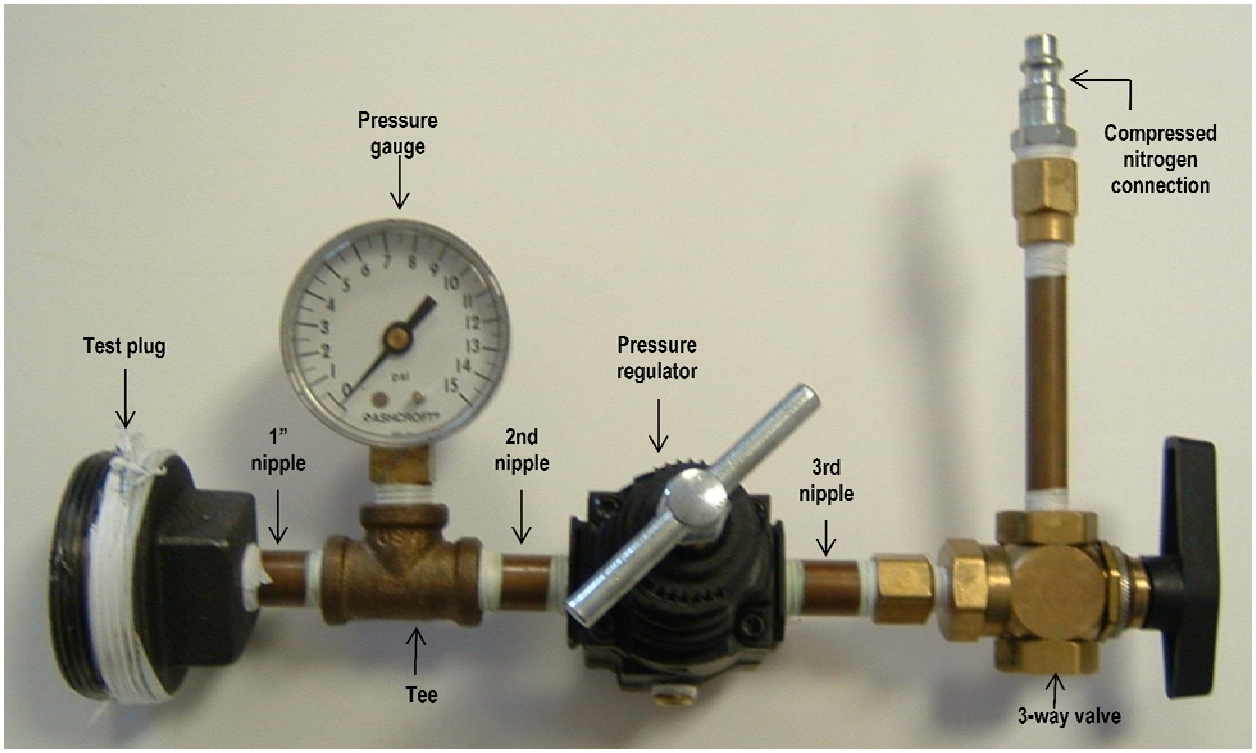

Figure 9: Typical Leak Check Test Fixture

6 Site Requirements

Be sure to read and understand all site requirements before beginning an installation.

6.1 Regulations / Jurisdiction

- Under vapor recovery rules, air pollution control districts have primary authority for regulating GDF's.
  - ► Before modifying the facility, GDF operators should contact the local air district for specific information on local vapor-recovery requirements.
  - ► Contact information for local air pollution control districts is available on the air district permit to operate (PTO) and/or the California Air Pollution Control Officers Association (CAPCOA) website at http://www.capcoa.org.
- The area inside the *Processor* cover has been evaluated as a Class I, Division 2 hazardous area as defined by Underwriters Laboratory.
- The *Processor* must not be installed in a Class I, Division 1 or a Class I, Division 2 hazardous location as defined by the NEC (National Electric Code).
  - ► Because the area inside the *Processor* cover has been evaluated as a Class I, Division 2 hazardous location, be sure that all existing electrical seal-offs continue to meet NEC and NFPA requirements after installation of the *Processor*.

CAUTION

Always obtain approval from the local authority having jurisdiction.

Installation of the *Processor* must comply with (if applicable):

- CARB CP-201
- VST EVR E.O.
- Fire Marshall
- Water Board
- Local Air Pollution District
- ICC
- NEC
- NFPA 30 and 30A
- UL
- Any other applicable federal, state, and local codes

6.2 Snapshot of Site Requirements

<u>Local Air Pollution Control District</u>

- GDF must contact the local air pollution control district for specific local vapor-recovery requirements.

<u>Ground-Mount Location</u>

- The local jurisdiction must allow the *Processor* to be placed on the ground.
- The *Processor* must be protected from damage.
- *Processor* must be located at least 10' from the property line.
- *Processor* must be within 100' of the vent risers.

<u>Roof-Mount Location</u>

- The local jurisdiction must allow the *Processor* to be placed on the roof.
- Structure must be strong enough to hold the weight of the *Processor:*
  - ► Three-phase 350 lbs. (Incl. cover wt.).
  - ► Single-phase 385 lbs. (Incl. cover wt.).
- VST recommends a 36" perimeter around the *Processor* for maintenance and testing.
- The height of the *Processor* must be above the building parapet to allow for the proper vapor-piping slope.

<u>Canopy-Mount Location</u>

- The local jurisdiction must allow the *Processor* to be placed on the canopy.
- Structure must be strong enough to hold the weight of the *Processor:*
  - ► Three-phase 350 lbs. (Incl. cover wt.).
  - ► Single-phase 385 lbs. (Incl. cover wt.).
- VST recommends a 36" perimeter around the *Processor* for maintenance and testing.
- All safety and code concerns have been addressed.

<u>Three Phase Electric</u>

- 3 empty breaker spaces 208/230-460v panel for blower and vacuum pump motors.
  - ► (1)115v breaker for the heat-trace cable.
  - ► (1) 115v outlet for the HC sentry.
  - ► GFCI protected, weatherproof, 115v convenience outlet located at the *Processor* is optional.
- 2-hp vacuum pump / ½-hp blower.

<u>Single Phase Electric</u>

- 2 empty 115v breaker spaces in the panel for the blower and vacuum pump motors.
  - ► (1) 115v breaker for the heat- trace cable.
  - ► (1) 115v outlet for the HC sentry.
  - ► GFCI protected, weatherproof, 115v convenience outlet located at the *Processor* is optional.
- 2-hp vacuum pump / ½-hp blower.

<u>Vent Risers</u>

- Recommended slope of ¼" per foot on all vapor-piping connecting the *Processor* to the vent risers or to any other UST connection. (VST requires a minimum of 1/8" per foot minimum slope for all vapor piping.)
- The maximum distance the *Processor* can be from the vent risers is 100-feet.
- Any type of trap, regardless of the *Processor* location, is not permitted in any vapor lines connected to the *Processor*.
- To install the *Processor*, there must be two vent risers connected at different locations to the UST's or to the underground vapor piping.
- If only one vent riser exists, another one must be added. Trenching to a UST or underground vapor piping is required in order to add the second vent riser.
- A 5' radius around the vent riser P/V valve is a Class I, Div. 2 hazardous area as defined in NFPA 70.

Snapshot of Site Requirements, continued . . .

UST Manifolding	Dispenser	CARB Requirements
• UST's must be manifolded below ground. • There must be at least two separate vent lines, which are not manifolded together.	• Must be a Balance dispenser. • Phase II vapor riser must be greater than or equal to 1" ID. • The *Processor* may not be installed in a Class 1, Division 1 or a Class 1, Division 2 hazardous location. **Veeder-Root Controls** • Must have TLS-350 with Veeder-Root software installed.	• VR-203 PMC • VR-204 ISD

7 Ground Installation

7.1 Ground Installation Safety

- The *Processor* will be installed near locations where highly flammable and explosive gasoline vapors may be present.
- Installation of the ECS Membrane *Processor* must comply with the National Electric Code, federal, state and local codes, as well as other applicable safety codes.
- Use extreme caution due to the risk of fire or explosion, which could result in serious injury or even death.
- If you are working in an area where vehicle traffic may occur, always block off the work area during installation, testing, and service to protect yourself and others.
- Do not use power tools that can generate sparks if there is a risk of flammable or explosive vapors being present.
- Read and understand all materials related to installing, testing, and operating the *Processor* prior to installation.

7.2 Protecting the Processor

- Take measures to protect the *Processor* and external vapor piping from damage in areas near vehicle traffic with guards, such as concrete-filled bollards or guardrails.

  ► Check local codes for protective-device guidelines before setting the bollards or guardrails.

- A fence should not be required since there is a lockable cover on the *Processor* with lockable hasps to prevent tampering. The contractor will provide the locks for the hasps.

- VST requires lockable ball valves be used at the inlet and outlet connections at the *Processor*.

  ► VST does not include any locks or lockable valves for the *Processor*; therefore, the contractor must provide them.

  ► Lockable ball valves used in this application must be compatible with gasoline and gasoline vapor. For further requirements, consult the lockable-valve installation instructions provided by the manufacturer.

- The *Processor* cover is designed and built to withstand snow accumulation, rain, and landscaping sprinklers.

7.3 Ground-Mount Location

- Location to property line: according to NFPA 30A, Section 10.1.7.1
  ". . . in no case shall the vapor-processing equipment so protected be located within 3m (10-feet) of adjacent property lines that <u>can be built upon</u>."

  ► Local authorities may grant reduced distance depending on the specific circumstances

- To minimize the installation cost and to maximize operating efficiency, locate the *Processor* adjacent to the existing vent risers.

- All vapor-piping connecting to the *Processor* must be sloped away from the *Processor*. VST recommends ¼" per foot slope. (VST requires a minimum of 1/8" per foot slope.)

- The *Processor* must be installed in accordance with the NEC and the NFPA standards.

- VST recommends a minimum clearance of 36" around the *Processor* for maintenance and testing.

- A new air outlet vent riser connected to the *Processor* must be installed to release air to the atmosphere.

- See Figure 5: Page 14-21.

<u>C A U T I O N</u>

Always obtain approval from the local authority having jurisdiction. Installation of the *Processor* must comply with (if applicable):

- CARB CP-201
- VST EVR E.O.
- Fire Marshall
- Water Board
- Local Air Pollution District
- ICC
- NEC
- NFPA 30 and 30A
- UL
- Any other applicable federal, state, and local codes

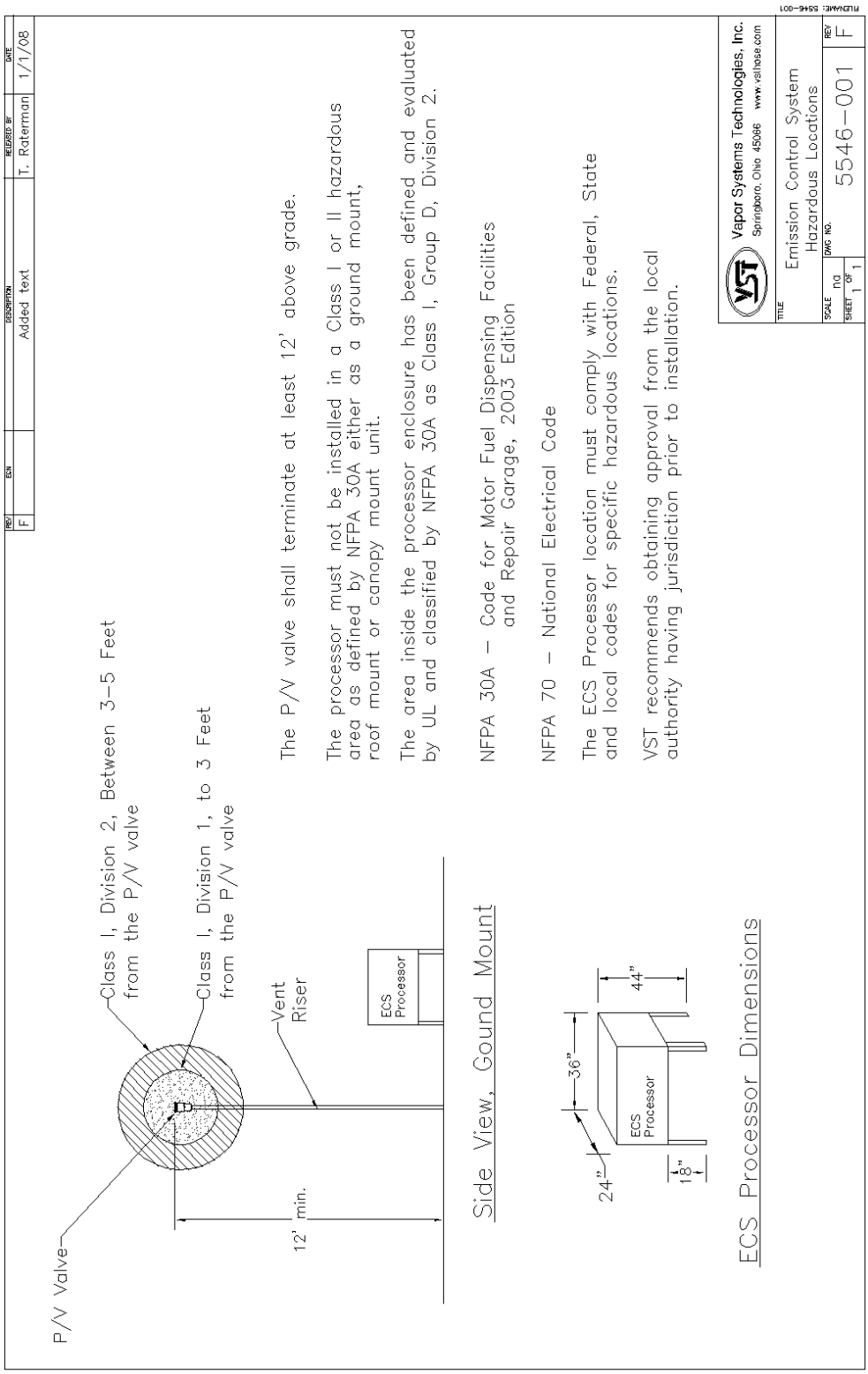

Figure 10: ECS Membrane Processor Hazardous Locations

7.4 Setting the Concrete Pad

- The *Processor* must be installed on a concrete pad, on grade, and permanently anchored to the concrete pad.
- The Processor CANNOT be installed directly on or anchored directly to asphalt. It must be installed and anchored directly to a concrete pad.
- The *Processor* can be installed on existing concrete, provided:
  - ► The existing concrete is of sufficient strength and thickness to support the *Processor*.
    - VST recommends a minimum of 4-inch thick concrete to accommodate 3 1/2" expansion-type anchor bolts.
    - Cracked concrete without re-bar may NOT be of sufficient strength to properly support the *Processor*.
  - ► The *Processor* is installed level.
- NOTE: VST CANNOT BE HELD RESPONSIBLE FOR DAMAGE CAUSED BY IMPROPER PROCESSOR FOUNDATION SUPPORT.
- VST does not provide any hardware to install the *Processor* on the pad.
- VST recommends using the minimum clearances listed below for maintenance and service:
  - ► Back: 36"
  - ► Front: 36"
  - ► Left: 36"
  - ► Right: 36"
- Concrete pad minimum dimensions:
  - ► 3'6" long x 2'6" wide
  - ► 6" thick (minimum)
  - ► See figure 11: Page 14-36.
- Use steel re-enforced rebar in the pad for additional strength.
- Install the pad level.
- Install expansion-type bolts after completing the concrete pad. The bolts must be:
  - ► 3/8" diameter
  - ► Embedded 3 ½" to 4" into the slab
  - ► Extend approx. 1 ½" above the top of the slab

7.4.1 Processor Weight and Dimensions

Part Number	Unit	Dimensions	Weight
VST-ECS-CS3-110	Single-Phase	L-39" x W-27" x H-43" Height includes 18" legs	385 lbs. Includes 24-lb. cover
VST-ECS-CS3-310	Three-Phase	L-39" x W-27" x H-43" Height includes 18" legs	350 lbs. Includes 24-lb. cover

7.5 Installing the Processor on the Concrete Pad

1	After the concrete has properly cured, install the expansion anchor bolts according to the manufacturer's recommendations.
2	For non-seismic applications, VST recommends using the HILTI KWIK BOLT, KB3 3/8" X 5" / item #00282524 as shown in Figure 12: 14-37 or an approved equal.
3	For applications that require expansion anchors that are especially suited to seismic and cracked concrete, VST recommends using the HILTI KWIK TZ (KB-TZ) BOLT, KB-TZ 3/8" X 5", (item number 00304583) or approved equal. ► The contractor or design engineer is responsible for sizing the expansion anchors and the concrete pad to meet seismic and cracked concrete specifications required by local, state, and federal jurisdictions. ► Since seismic regulations may be different by location, VST has not included a specific drawing for this application. ► For seismic design reference, www.us.hilti.com.
4	After the appropriate anchor bolts have been installed, position the *Processor* onto the anchor bolts in the cement slab.
5	Bolt the *Processor* into place (according to the manufacturer recommended installation guidelines) with 3/8" galvanized lock washers and bolts that are included with the expansion bolt.

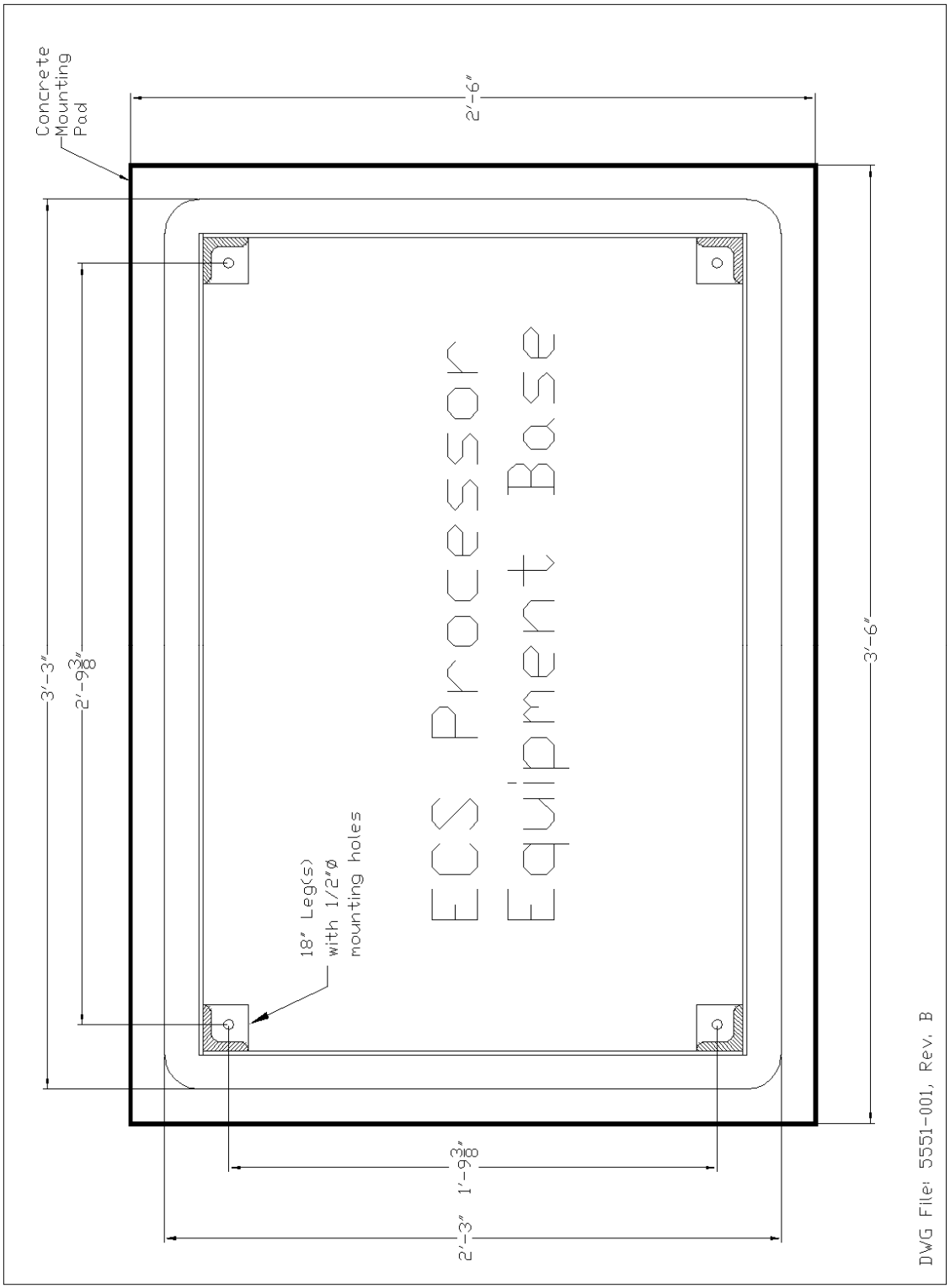

Figure 11: Concrete Mounting Pad Dimensions

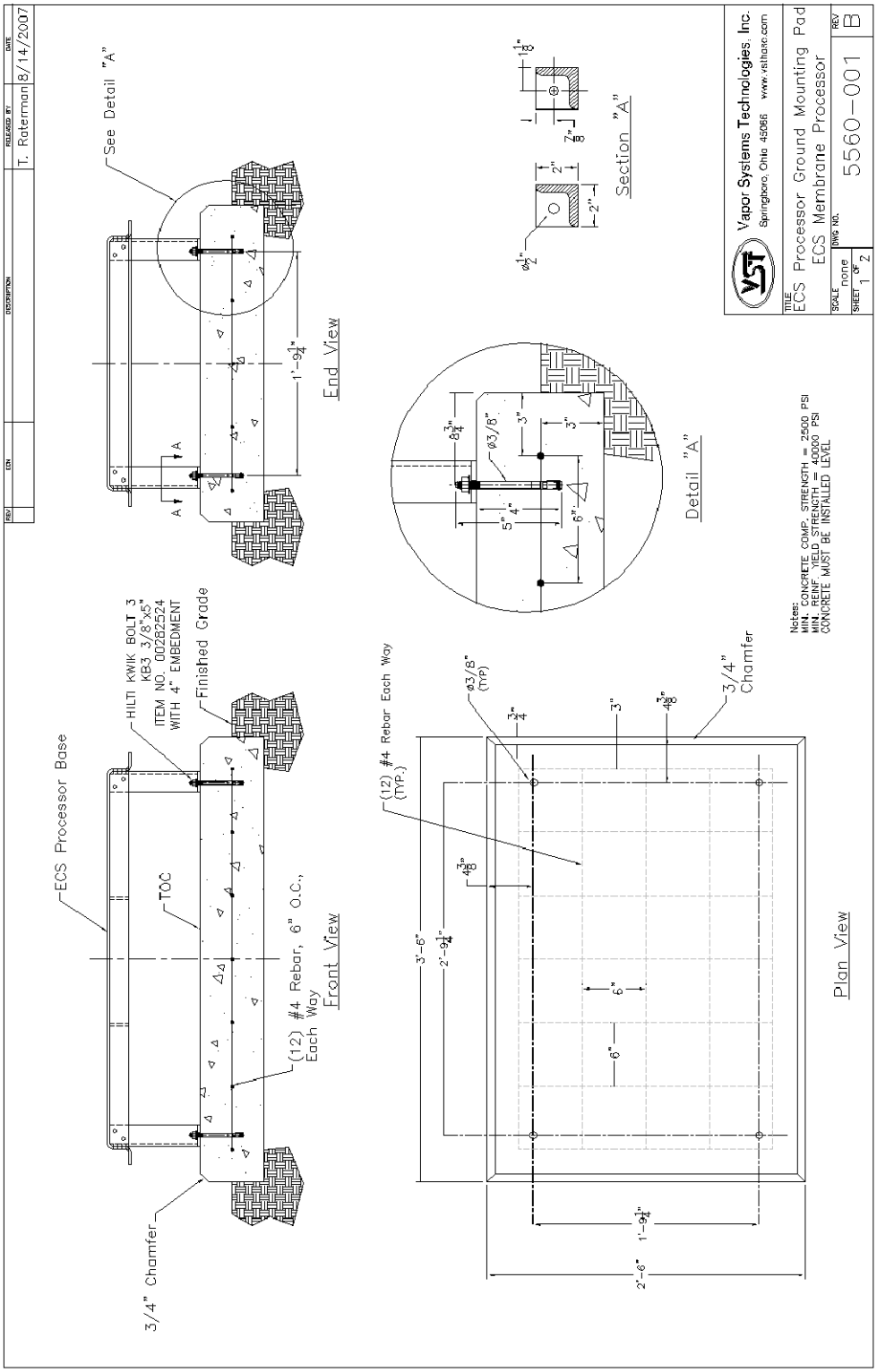

Figure 12: Processor Ground Mounting Pad

8 Roof-Top Installation

8.1 Roof-Top Installation Safety

- The *Processor* will be installed near locations where highly flammable and explosive gasoline vapors may be present.
- Installation of the ECS Membrane *Processor* must comply with the National Electric Code, federal, state and local codes, as well as other applicable safety codes.
- Use extreme caution due to the risk of fire or explosion, which could result in serious injury or even death.
- If you are working in an area where vehicle traffic may occur, always block off the work area during installation, testing, and service to protect yourself and others.
- Do not use power tools that can generate sparks if there is a risk of flammable or explosive vapors being present.
- Read and understand all materials related to installing, testing, and operating the *Processor* prior to installation.

- The *Processor* may be installed on a station's roof provided the structure can support the weight of the *Processor*.

Part Number	Unit	Dimensions	Weight
VST-ECS-CS3-110	Single-Phase	L-39" x W-27" x D-43" Height includes 18" legs	385 lbs. Includes 24-lb. cover
VST-ECS-CS3-310	Three-Phase	L-39" x W-27" x D-43" Height includes 18" legs	350 lbs. Includes 24-lb. cover

CAUTION

Always obtain approval from the local authority having jurisdiction. Installation of the *Processor* must comply with (if applicable):

- CARB CP-201
- VST EVR E.O.
- Fire Marshall
- Water Board
- Local Air Pollution District
- ICC
- NEC
- NFPA 30 and 30A
- UL
- Any other applicable federal, state, and local codes

- Location to property line: according to 2003 Edition of NFPA 30A, Section 10.1.6-Page 23: Vapor-processing equipment shall be located "At least 3m (10 ft) from adjacent property lines that can be built upon."
  - ► Local authorities may grant reduced distance depending on the specific circumstances.
- The *Processor* must not be installed within 5' of a vent riser P / V valve.
- A 5' radius around the vent riser P/V valve is a Class I, Div. 2 hazardous area as defined in NFPA 70.
- All vapor-piping connecting to the *Processor* must be sloped away from the *Processor*. VST recommends ¼" per foot slope. (VST requires a minimum of 1/8" per foot slope.)
- Any equipment located on the roof that is rated as Class I, Div. 2 cannot be located within 10' of the *Processor,* unless the equipment is at least 18" above the roof top.

- The *Processor* must be installed in accordance with the NEC and the NFPA standards.
- VST recommends a minimum clearance of 36" around the *Processor* for maintenance and testing.
- Due to a variety of roof construction designs, VST cannot recommend how the *Processor* should be mounted on the roof; however, the *Processor* must be installed at a height allowing the piping inlet and outlets to be above the building parapet.
- The *Processor* is shipped on 18" legs bolted on the base, but the legs may be removed and the *Processor* secured to a steel structure attached to the roof.
- A new air outlet vent riser connected to the *Processor* must be installed to release air to the atmosphere.

9 Canopy Top Installation

9.1 Canopy Top Installation Safety

- The *Processor* will be installed near locations where highly flammable and explosive gasoline vapors may be present.
- Installation of the ECS Membrane *Processor* must comply with the National Electric Code, federal, state and local codes, as well as other applicable safety codes.
- Use extreme caution due to the risk of fire or explosion which could result in serious injury or even death.
- If you are working in an area where vehicle traffic may occur, always block off the work area during installation, testing, and service to protect yourself and others.
- Do not use power tools that can generate sparks if there is a risk of flammable or explosive vapors being present.
- Read and understand all materials related to installing, testing, and operating the *Processor* prior to installation.

- The *Processor* may be installed on a station's canopy provided the structure can support the weight of the *Processor*.

Part Number	Unit	Dimensions	Weight
VST-ECS-CS3-110	Single-Phase	L-39" x W-27" x D-43" Height includes 18" legs	385 lbs. Includes 24-lb. cover
VST-ECS-CS3-310	Three-Phase	L-39" x W-27" x D-43" Height includes 18" legs	350 lbs. Includes 24-lb. cover

- Location to property line: according to 2003 Edition of NFPA 30A, Section 10.1.6, Page 23: Vapor-processing equipment shall be located
  - ► "At least 3m (10 ft) from adjacent property lines that <u>can be built upon</u>." Local authorities may grant reduced distance depending on the specific circumstances.
- The *Processor* cannot be installed within 5' of a vent riser P / V valve.
- A 5' radius around the vent riser P/V valve is a Class I, Div. 2 hazardous area as defined in NFPA 70.
- All vapor-piping connecting to the *Processor* must be sloped away from the *Processor*. VST recommends ¼" per foot slope. (VST requires a minimum of 1/8" per foot slope).
- The *Processor* must be installed in accordance with the NEC and the NFPA standards.

<u>CAUTION</u>

Always obtain approval from the local authority having jurisdiction.

Installation of the *Processor* must comply with (if applicable):

- CARB CP-201
- VST EVR E.O.
- Fire Marshall
- Water Board
- Local Air Pollution District
- ICC
- NEC
- NFPA 30 and 30A
- UL
- Any other applicable federal, state, and local codes

- VST recommends a minimum clearance of 36” around the *Processor* for maintenance and testing.
- Due to a variety of canopy construction designs, VST cannot recommend how the *Processor* should be mounted on the canopy.
- All safety and code concerns should be taken into consideration prior to a canopy-top installation.
- The *Processor* is shipped on 18” legs bolted on the base, but the legs may be removed and the *Processor* secured to a steel structure attached to the canopy or to the roof top.

  NOTE: THE MINIMUM PIPING SLOPE MUST ALWAYS BE MAINTAINED.

- A new air outlet vent riser connected to the *Processor* must be installed to release air to the atmosphere.

10 Vapor Piping

10.1 Vapor Piping Safety

- The *Processor* will be installed near locations where highly flammable and explosive gasoline vapors may be present.
- Installation of the ECS Membrane *Processor* must comply with the National Electric Code, federal, state and local codes, as well as other applicable safety codes.
- Use extreme caution due to the risk of fire or explosion which could result in serious injury or even death.
- If you are working in an area where vehicle traffic may occur, always block off the work area during installation, testing, and service to protect yourself and others.
- Do not use power tools that can generate sparks if there is a risk of flammable or explosive vapors being present.
- Read and understand all materials related to installing, testing, and operating the *Processor* prior to installation.

10.2 Piping Connection Material

- All connections to the *Processor* must be galvanized pipe.

10.3 Piping Connections to the Processor

- There are 3 piping connections to be made to the *Processor*:

  1. Vapor inlet from the UST vapor-piping system
  2. Vapor return back to the UST vapor-piping system
  3. Air outlet to atmosphere

- The typical installation will have:

  ► The *Processor* vapor inlet connected to the high-grade UST vent.

  ► The *Processor* vapor return connected to the low-grade UST vent.

  ► The *Processor* vapor air outlet vent riser is to be added next to the existing UST vent risers if possible.

CAUTION

Always obtain approval from the local authority having jurisdiction.

Installation of the *Processor* must comply with (if applicable):

- CARB CP-201
- VST EVR E.O.
- Fire Marshall
- Water Board
- Local Air Pollution District
- ICC
- NEC
- NFPA 30 and 30A
- UL
- Any other applicable federal, state, and local codes

10.3.1 Flexible Connections

- Flexible connections between the Processor locking ball and the vent riser(s) are allowable if required by the local Authority Having Jurisdiction to meet seismic requirements.
- Should the flex connection be installed such that it is not supported, the slope of the flex connection from the Processor back to the vent riser(s) shall be greater than the 1/8" / foot slope required for the rest of the one-inch galvanized piping.
- The flexible connector must be UL approved for a service station above-ground application.
- The local contractor is responsible to provide all necessary galvanized piping, non-hardening UL-classified pipe joint compound and plumbing fittings.
- This requirement may apply for ground, rooftop, and canopy-mount locations.

10.4 Trenching

- The *Processor* may be installed without any trenching provided:
  - ► There are at least 2 vent risers connected to the UST's.
  - ► The vent-riser piping connecting to the UST's will not short circuit the *Processor*.
- Trenching will be required if only one vent riser exists at the GDF to connect the *Processor* to the UST's.
  - ► When one vent riser exists at a GDF, trenching is required to return the concentrated vapor from the *Processor* to the UST's.
  - ► The existing vent riser will be used as the "Vapor Inlet" connection to the *Processor*.
  - ► A new vent riser must be installed that connects the *Processor* to the UST's.
    - ▪ The connection pipe must be a minimum of 2" ID for all underground piping.
    - ▪ All new piping must be sloped back to the UST's.
    - ▪ VST recommends a ¼" per foot slope away from the *Processor* for all vapor piping connecting the *Processor* to the UST vent risers or to any other UST connection points. A minimum of 1/8" slope is required by VST.
    - ▪ The connection location to the UST's must be configured to prevent short-circuit of the inlet vapor piping to the *Processor*.
    - ▪ The connection should be used as the "Vapor Return" piping returning the concentrated vapor from the *Processor* to the Low Octane UST.

10.5 Underground Vapor Piping Instructions

- From the dispenser to the UST:
  - ► A minimum of 2" ID is acceptable unless the dispenser lines are manifolded together.
  - ► Manifolded dispenser lines require a minimum 3" ID piping, including the float-vent valve, if applicable.
  - ► Check the "Vapor-Recovery Piping Configurations" section of Exhibit 2 for Underground Piping Requirements.
- From the UST to the vent riser
  - ► Stations that use only one vent riser require a minimum of 3" ID vapor piping and will require trenching as well.
  - ► Stations that use multiple risers require a minimum of 2" ID vapor piping.
- From the *Processor* vapor return to the UST
  - ► When new underground piping is required from the *Processor* vapor return to the low octane UST, VST requires a minimum of 2" ID piping.

CAUTION

Always obtain approval from the local authority having jurisdiction.

Installation of the *Processor* must comply with (if applicable):

- CARB CP-201
- VST EVR E.O.
- Fire Marshall
- Water Board
- Local Air Pollution District
- ICC
- NEC
- NFPA 30 and 30A
- UL
- Any other applicable federal, state, and local codes

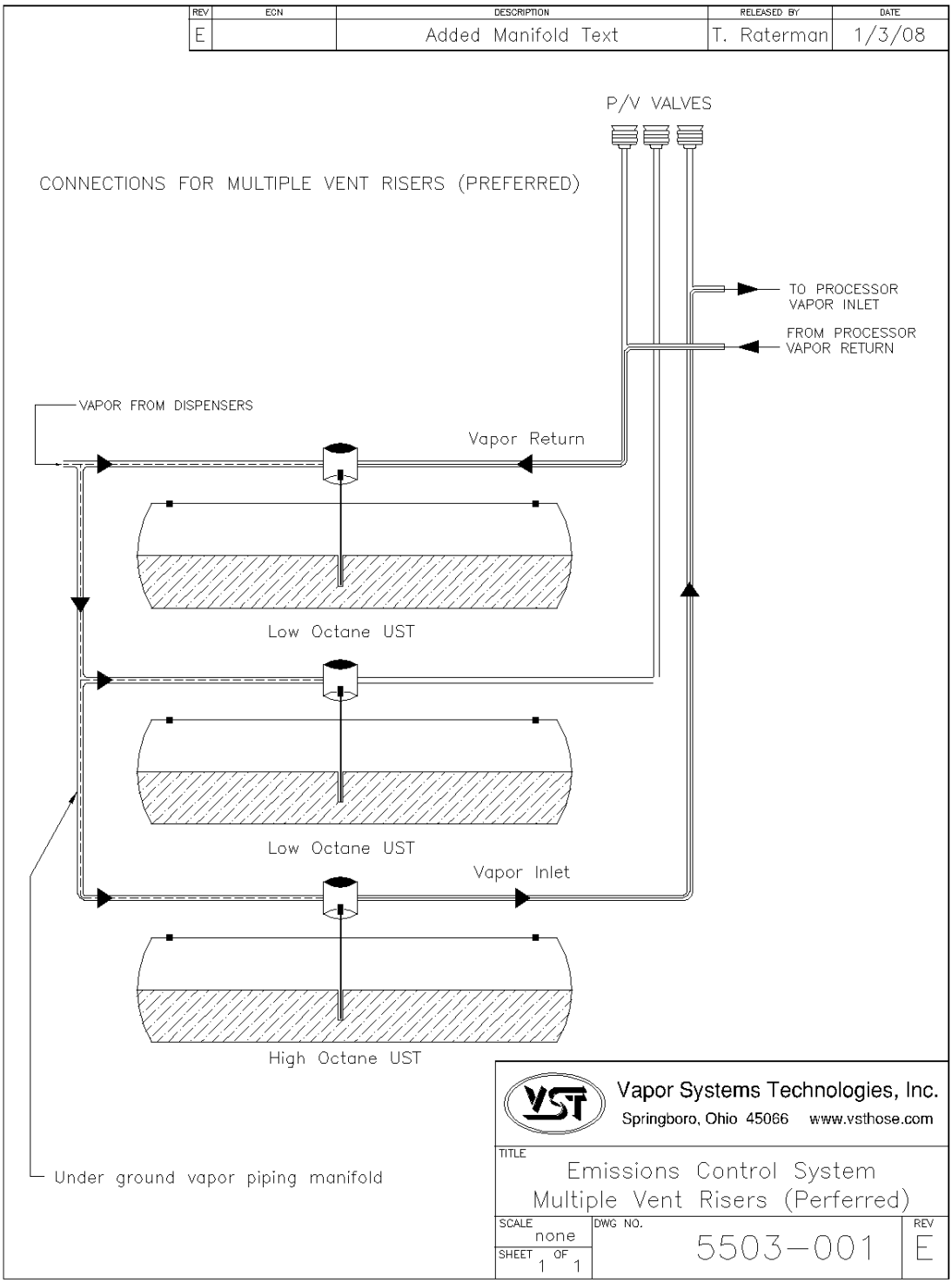

Figure 13: Processor Connections with Multiple Vent Risers

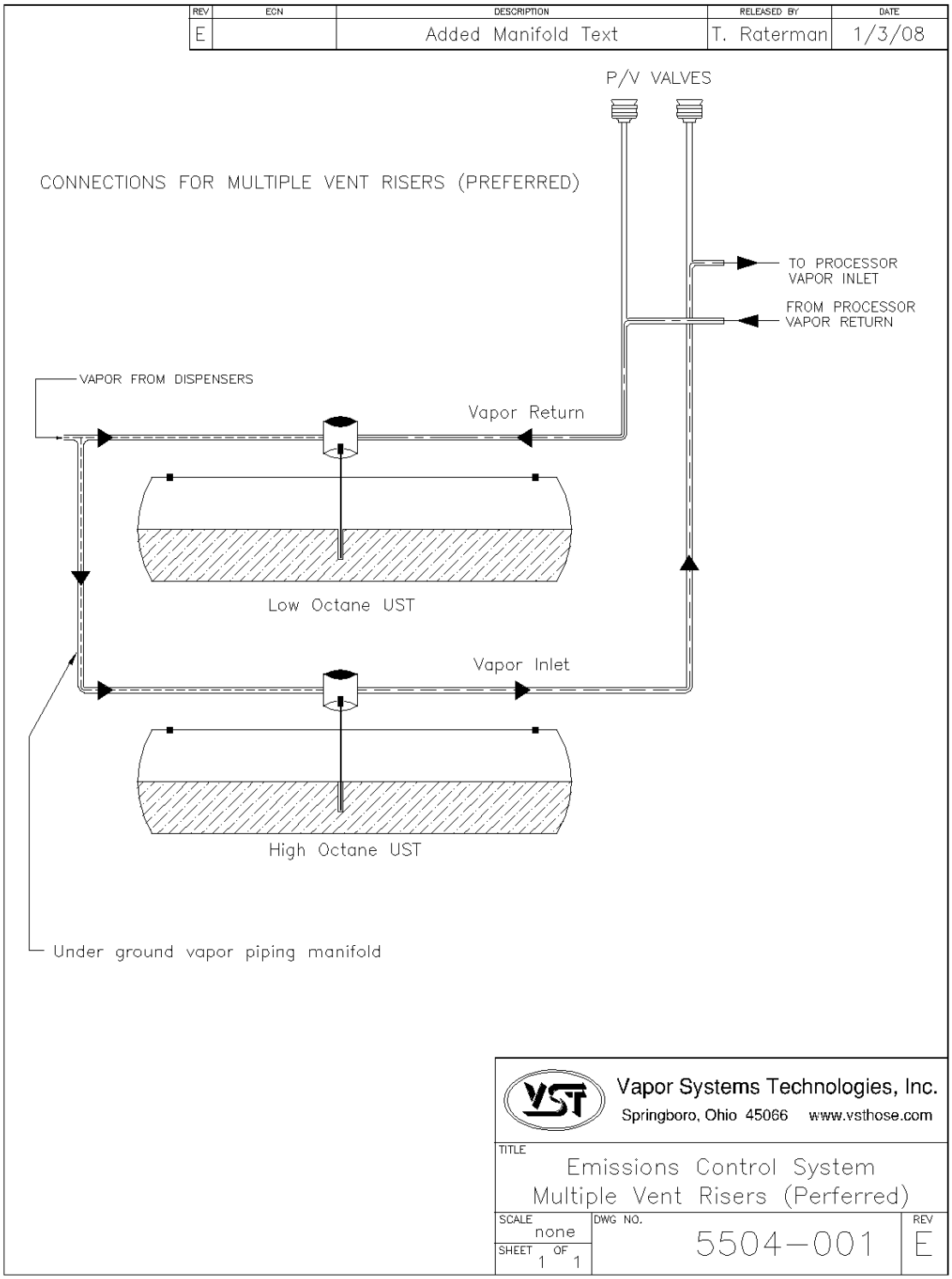

Figure 14: Processor Connections with 2 Vent Risers

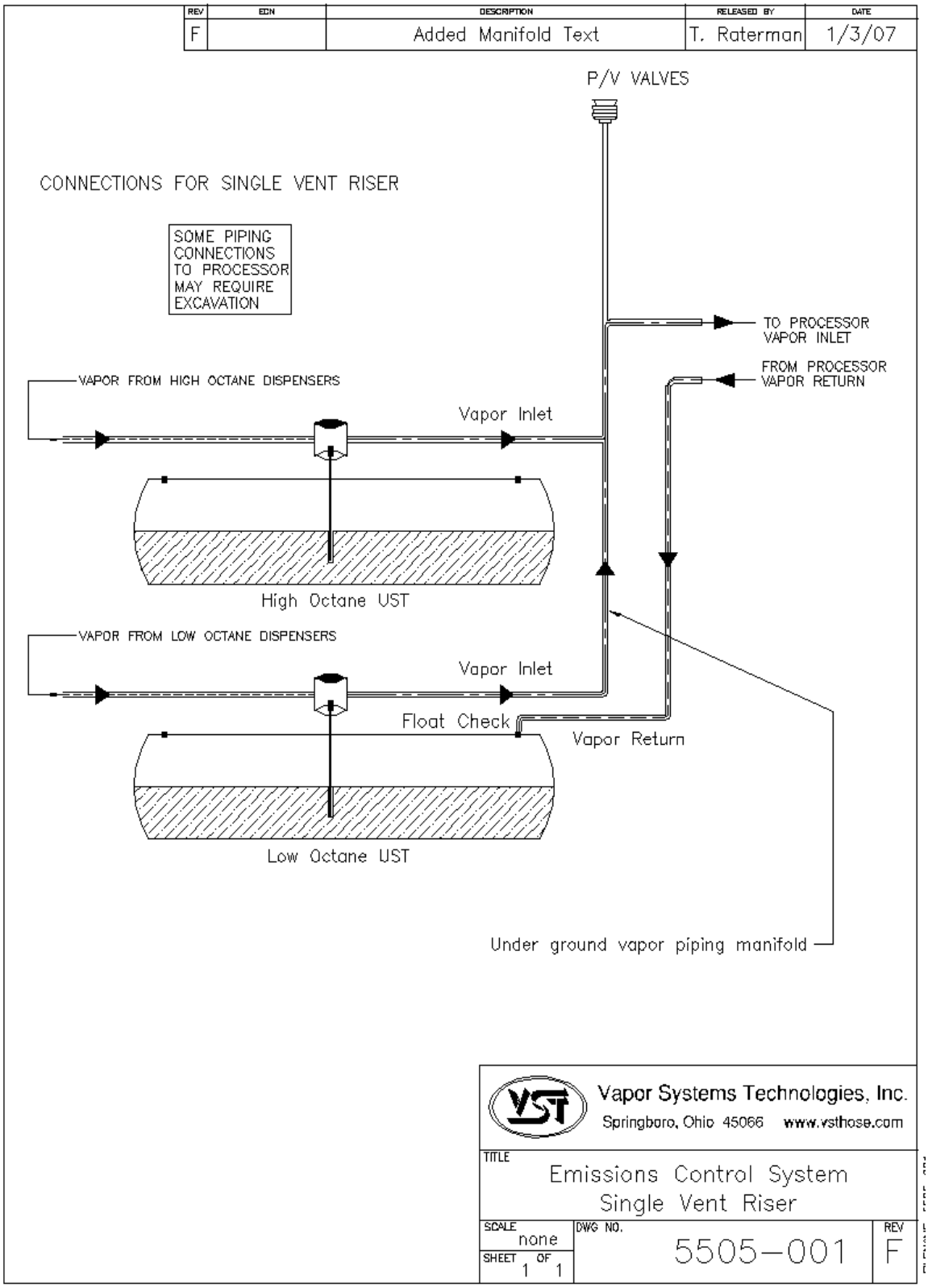

Figure 15: Processor Connections with Single Vent Riser

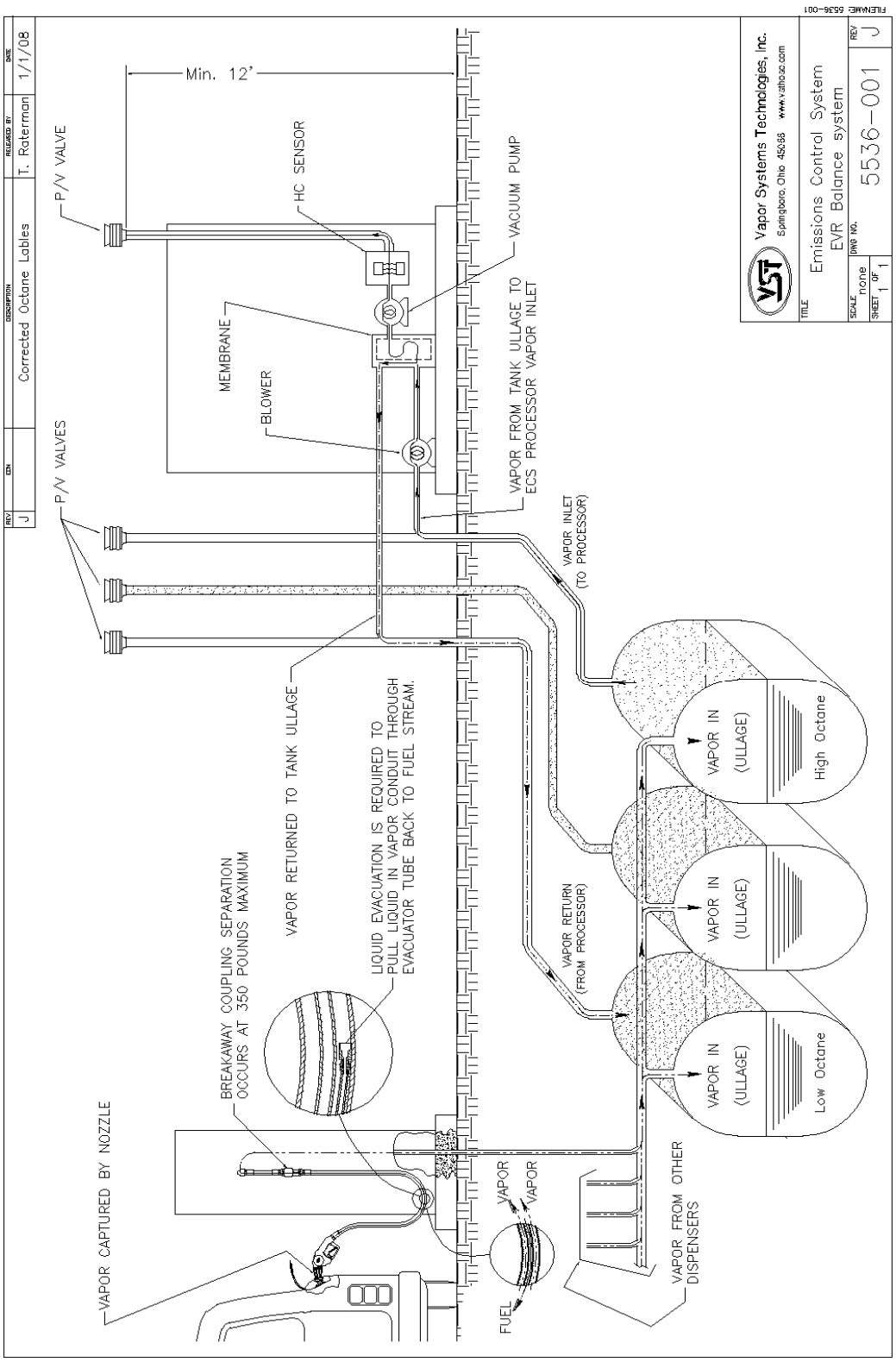

Figure 16: Typical GDF Vapor Piping Diagram for Processor

10.6 Vapor Inlet and Vapor Return Connections

- Install a minimum 1" galvanized pipe between the *Processor* and the vent riser(s) if the distance between the *Processor* and the vent riser is less than 10'.
- If the distance between the *Processor* and vent risers is greater than 10', use a minimum 1 ½" diameter pipe.
- See Figure 17: Page 14-X for pipe size requirements.
- When new underground piping is required from the *Processor* to the low-octane UST, a minimum of 2" ID piping is required.
- Order of installation:

  1. Processor
  2. Tee (sized for the pipe diameter)
  3. Ball Valve (sized for the pipe diameter)
  4. Union (sized for the pipe diameter)
  5. Vent Riser

> The tee and the ball valve allow for isolation of the *Processor* from the vapor-piping system for maintenance and testing. See Figure 17: Page 14-52

- Provide a slope for the piping from the *Processor* of at least ¼" per foot.
  - ► VST requires a minimum slope of 1/8" per foot.
- Verify that all piping connections are leak tight.
- Connect the vapor inlet and vapor return for the *Processor* to existing vent risers provided there are multiple vent risers connecting to individual USTs.
- Install new tees in the existing vent risers for connection to the *Processor* vapor inlet & outlet.
- Take note that pipe connecting vent risers to the *Processor* MUST slope away from the *Processor* towards the vent risers.

10.6.1 Flexible Connections

- Flexible connections between the Processor locking ball and the vent riser(s) are allowable if required by the local Authority Having Jurisdiction to meet seismic requirements.
- Should the flex connection be installed such that it is not supported, the slope of the flex connection from the Processor back to the vent riser(s) shall be greater than the 1/8" / foot slope required for the rest of the one-inch galvanized piping.
- The flexible connector must be UL approved for a service station above-ground application.
- The local contractor is responsible to provide all necessary galvanized piping, non-hardening UL-classified pipe joint compound and plumbing fittings.
- This requirement may apply for ground, rooftop, and canopy-mount locations.

11 Air Outlet Connection

- Install a minimum 1" tee and 1" lockable ball valve between the *Processor* and the new vent riser in the order of:

  1. Processor
  2. Tee (sized for the pipe diameter)
  3. Ball Valve (sized for the pipe diameter)
  4. Union (sized for the pipe diameter)
  5. Vent Riser

See Figure 17: Page 14-52.

- Be sure to follow the same height and location criteria for the additional vent riser that has been used for the existing vent pipes.
  - ► The tee and the valve allow for isolation of the *Processor* from the vapor-piping system for maintenance and/or testing as needed.
  - ► Verify that all piping connections are leak tight.
- Install a new tee with a cap at the bottom of the new air outlet vent riser to provide for drainage.
- Install the new dedicated vent riser so that the discharge opening is a minimum of 12-feet above grade and a minimum of 1" diameter.
- Be sure to slope the air outlet vent-riser discharge pipe downward away from the *Processor*.
  - ► VST recommends a ¼" per foot slope away from the *Processor* for all vapor piping connecting the *Processor* to the UST vent risers or to any other UST connection points. A minimum of 1/8" slope is required by VST.
- A P/V valve must be installed on the air outlet vent riser to shield against rain and reduce noise.
- The air outlet discharge creates a hazardous location per the NFPA 30A, therefore:
  - ► Class I, Group D, Division 1 is within 3 feet in all directions of the vent opening.
  - ► Class I, Group D, Division 2 is within 3 and 5 feet in all directions of the vent opening.
- The new vent riser may be installed next to the existing vent risers.

11.1 Flexible Connections

- Flexible connections between the Processor locking ball and the vent riser(s) are allowable if required by the local Authority Having Jurisdiction to meet seismic requirements.

- Should the flex connection be installed such that it is not supported, the slope of the flex connection from the Processor back to the vent riser(s) shall be greater than the 1/8" / foot slope required for the rest of the one-inch galvanized piping.

- The flexible connector must be UL approved for a service station above-ground application.

- The local contractor is responsible to provide all necessary galvanized piping, non-hardening UL-classified pipe joint compound and plumbing fittings.

- This requirement may apply for ground, rooftop, and canopy-mount locations.

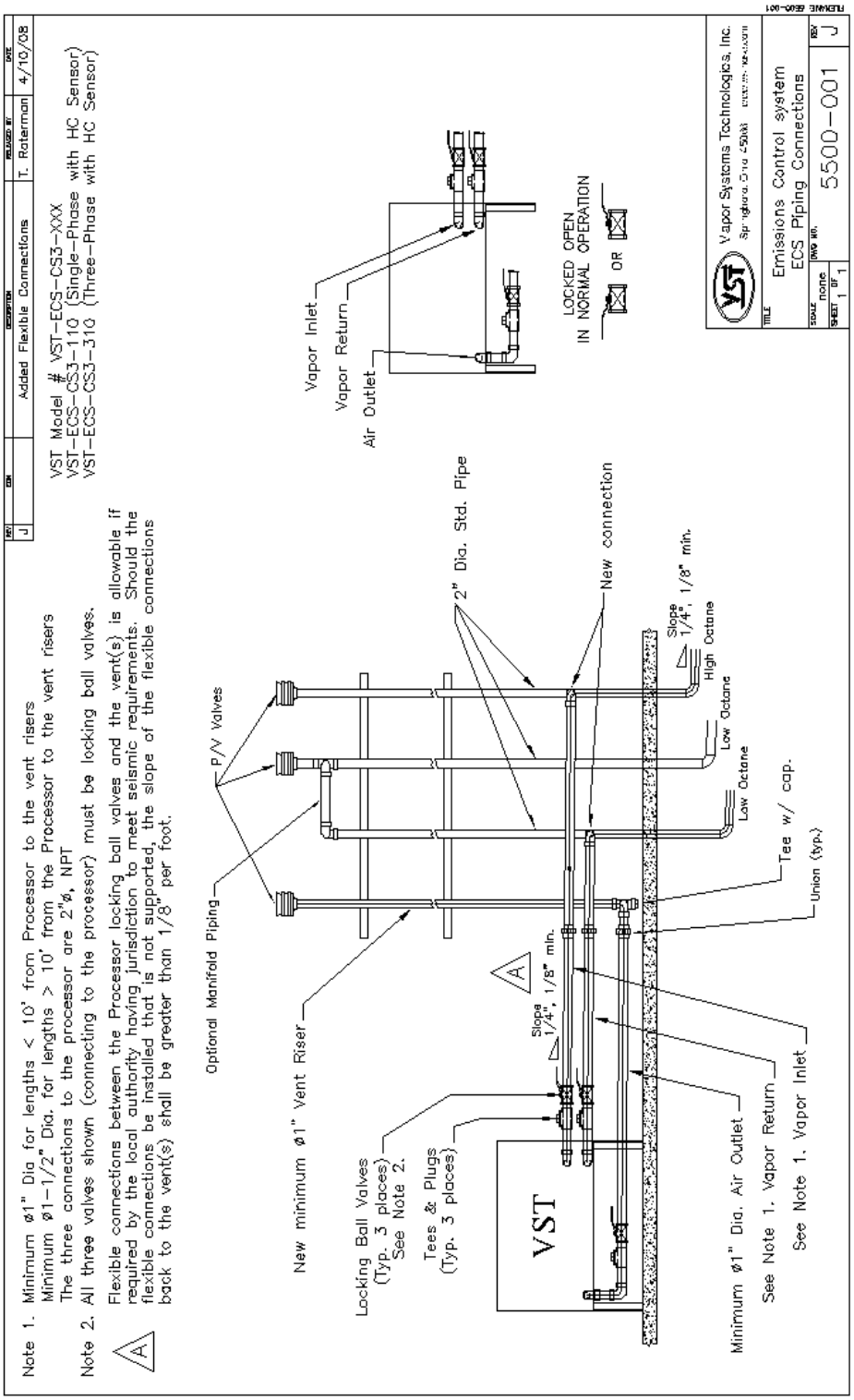

Figure 17: ECS Processor Piping Diagram

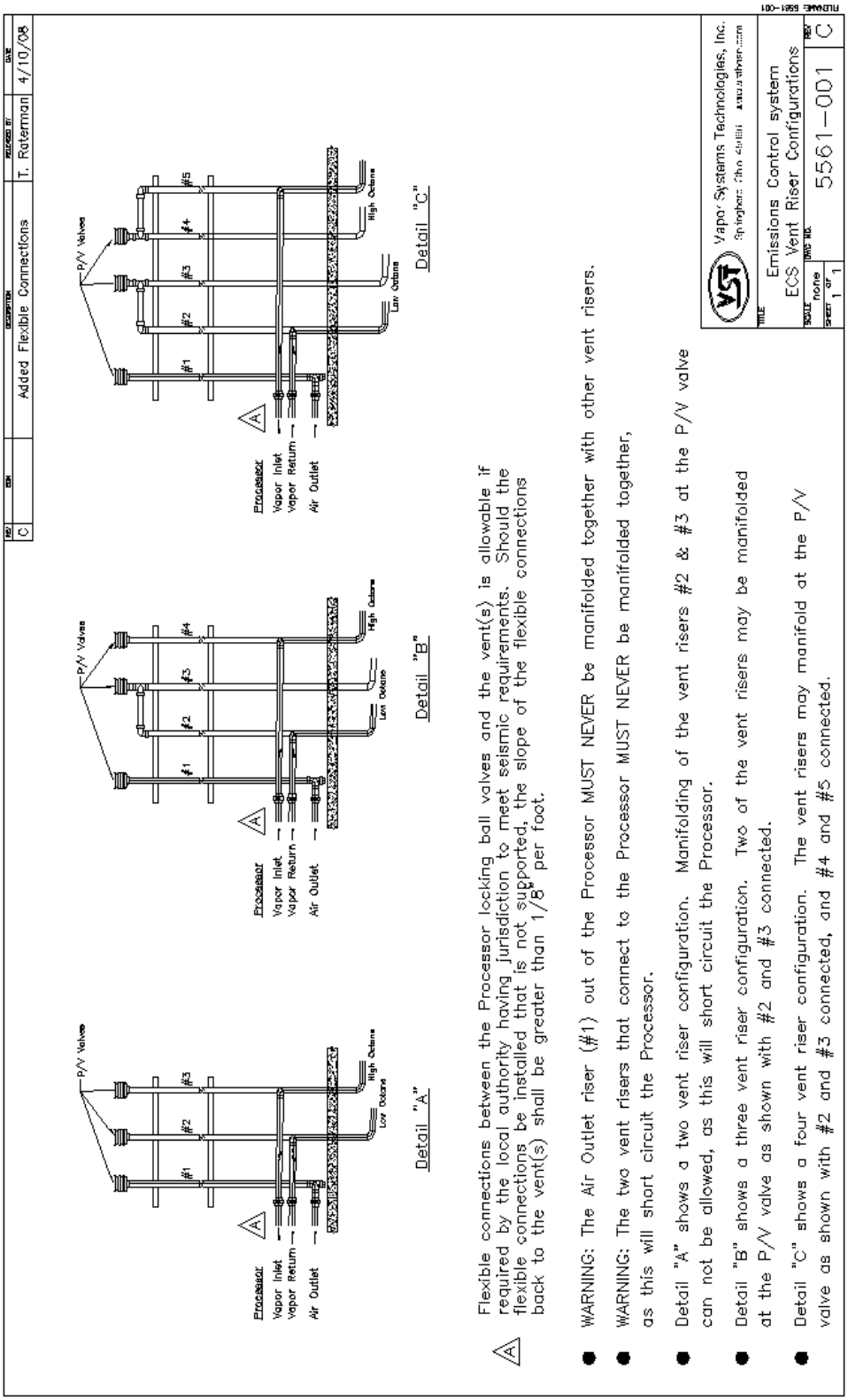

Figure 18: ECS Vent Configuration

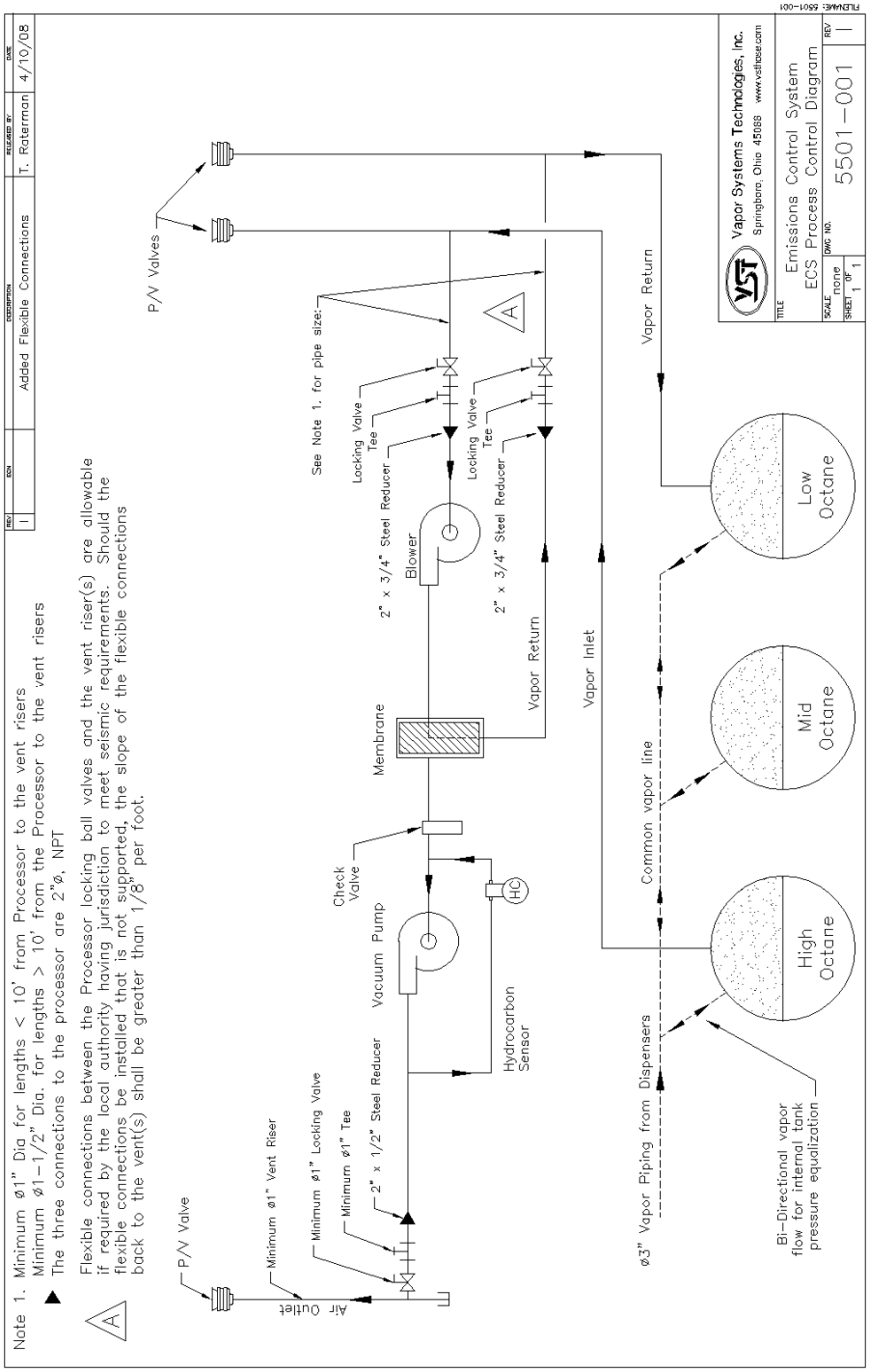

Figure 19: Processor Piping Connections

11.2 Underground Piping Connection

- Provide a slope for the vapor piping for drainage. VST recommends a ¼" per foot slope for all vapor piping. A minimum of 1/8" slope is required by VST.

- Meet all CP-201 size and slope requirements for all underground piping.

  ► To avoid the possibility of an underground liquid trap, never use flexible vapor piping.

- All underground vapor piping must be a minimum of 2" NPT.

  ► Always check with local authorities for applicable requirements; larger pipe size may be required.

- Refer to pipe-size requirements in Exhibit 2, Executive Orders VR/203 and VR/204.

11.3 Storage Tank Vapor Manifolds

- Storage tanks must be vapor manifolded below ground.

11.4 P / V Valves

- All of the vent risers, including the additional vent risers for the *Processor* air outlet, must have a P/V valve installed.

- The air outlet P/V valve (functional or non-functional) is not regulated by CARB and does not need to be tested by AQMD's.

- The P/V valve for each vent riser (not including the *Processor* air outlet) is part of the Phase I system, and therefore must be a CARB-certified component.

CAUTION

Always obtain approval from the local authority having jurisdiction.

Installation of the *Processor* must comply with (if applicable):

- CARB CP-201
- VST EVR E.O.
- Fire Marshall
- Water Board
- Local Air Pollution District
- ICC
- NEC
- NFPA 30 and 30A
- UL
- Any other applicable federal, state, and local codes

12 Electrical

12.1 Electrical Safety

- The *Processor* uses lethal voltages and operates in areas where gasoline vapor may be present.
- Serious injury or death from electrical shock, fire, or explosion may result if the power in ON during installation, testing, or maintenance.
- Be sure to use Lockout/Tag-Out procedures when working on or installing the *Processor* or while working on electrical components.
- Always power OFF any electrical components connected to the *Processor*. The *Processor* can start automatically.
- Do not use tools that can generate sparks if there is risk of flammable or explosive vapors being present.
- Read and understand all materials related to installing, testing, and operating the *Processor* prior to installation.

12.2 Single-Phase Processor

- A lockable, safety disconnect-switch is not included with the *Processor*.
  - ► NEC code requires that a readily accessible lockable, safety disconnect-switch be installed within sight of the *Processor*.
  - ► VST recommends installing the lockable, safety disconnect-switch approximately 3-feet from the *Processor* for testing and inspection reasons.
- At the main breaker, size the motor panel breaker according to the table below. Make sure the total amperage includes both motors.

Single-Phase Power Requirements				
Motor	HP	Phase	Voltage	Amperage
Blower	.5	Single	115	9.8
			230	4.9
Vacuum Pump	2	Single	115	24
			230	12

Table 1: Single-Phase Motor Power Requirements

- The contractor is to supply a lockable circuit breaker in accordance with local, state, and national authorities.
- It is mandatory to follow standard lock-out/tag-out procedures when performing service on the *Processor*.

- Following such procedures may be required by local, state, and national authorities.
  - ► You must install the *Processor* in accordance with the National Electric Code (NEC), NFPA 70, and with the Automotive and Marine Service Station Code (NFPA30A).
  - ► According to NFPA 30A and the California Fire Code:

    "Electrically energized vapor-recovery equipment shall be directly connected to and controlled by the emergency pump shut off in Section 5202.4.7." See figure 22: Page 14-67.

- The contractor shall supply 115v motor starter(s) with a 115v relay coil to start/stop the single-phase motors.

12.2.1 Power Requirements for Single-Phase Electrical Service

- 115v/230v, single-phase, 60Hz (blower and vacuum pump motors).
  - ► See Table 1: Page 14-56 for the motor amperage.
- 115v breaker (heat-trace cable power).
  - ► 115v, 2-amp service to power the heat trace.
- 115v, 2-amp minimum service to power a dedicated outlet for the 24VDC power supply for the HC sensor and the HC sentry.
- The ECS motor-starter relay(s) connects to the TLS.
- The ECS motor-starter relay(s) can be located inside the GDF or at the *Processor*, depending on the electrical design.

12.3 Three-Phase Processor

- A circuit disconnect device is not included with the *Processor*.
  - ► NEC code requires that a readily accessible lockable, safety disconnect-switch be installed within sight of the *Processor*.
  - ► VST recommends installing the lockable, safety disconnect-switch approximately 3-feet from the *Processor* for testing and inspection reasons.
- At the main breaker use a 208/230-460v, 3-phase, 60Hz electric service.
  - ► See Table 2: Page 14-58 for the motor amperage.
- The contractor is to supply a lockable circuit breaker in accordance with local, state, and national authorities.
  - ► It is mandatory practice to follow standard lock-out / tag-out procedures when performing service on the unit.
- Following such procedures may be required by local, state, and national authorities.
  - ► You must install the *Processor* in accordance with the National Electric Code (NEC), NFPA 70, and with the Automotive and Marine Service Station Code (NFPA30A).
  - ► According to NFPA 30A and the California Fire Code:
    "Electrically energized vapor-recovery equipment shall be directly connected to and controlled by the emergency pump shut off in Section 5202.4.7." See figure 27: Page 14-72.

- The contractor shall supply a 208/230-460v motor starter(s) with a 115v relay coil to start / stop the three-phase motors.

12.3.1 Power Requirements for Three-Phase Electrical Service

- See Table 2: Page 14-58 for the motor amperage.
  - ► 208/230-460v, 3-phase, 60Hz (blower and vacuum pump motors).

- Size the motor panel breaker according to the table below. Make sure the total amperage includes both motors.

Three-Phase Power Requirements				
Motor	HP	Phase	Voltage	Amperage
Blower	.5	Three	208	2.4
			230	2.2
			460	1.1
Vacuum Pump	2	Three	208	7.5
			230	6.8
			460	3.4

Table 2: Three Phase Motor Power Requirements

- 115v breaker (heat-trace cable power)
  - ► 115v, 2-amp minimum service to power the heat trace

- 115v, 2-amp service to power a dedicated outlet for the 24VDC power supply for the HC sensor and the HC sentry

- The ECS motor-starter relay(s) connects to the TLS.
  - ► 115V, 2 amp service to power the motor-starter relay coil.

- The ECS motor-starter relay(s) can be located inside the GDF or at the *Processor*, depending on the electrical design.

12.4 Reference Information for Processor Power Requirements

- The following information is for general reference and is not intended to replace recommended National Electric Code (NEC) procedures. It is important for the installer to understand that electrical equipment and wiring located in Class I, Division 2 installations shall comply with the latest appropriate Articles found in the National Electric Code (NFPA 70).

1. The HC sentry must be installed indoors in the GDF's electrical room.

2. All electrical/control components must be installed per the NEC, with clear access for personnel.

3. The area inside the *Processor* cover is classified as a Class I, Division 2 hazardous area as defined by UL. All electrical components inside the *Processor* are rated for this hazardous area. The *Processor* must not be installed in a Class I, Division 1 or Class I, Division 2 hazardous location as defined by the NEC.

4. Because the area inside the *Processor* cover is defined as a Class I, Division 2 hazardous location, be sure that all existing electrical seal-offs continue to meet NEC and NFPA requirements after installation of the *Processor*.

5. NEC code requires a lockable, safety disconnect-switch be installed. VST does not provide an outside electrical disconnect for the *Processor*. The NEC requires an electrical lockable, safety disconnect-switch be connected to the *Processor* with respect to the panel location. Consult the NEC as to the correct location and type of disconnect.

6. Install the *Processor* in accordance with the National Electrical Code (NFPA 70) and the Automotive and Marine Service Station Code (NFPA 30A).

7. According to NFPA 30A and the California Fire Code:

   "Electrically energized vapor-recovery equipment shall be directly connected to and controlled by the emergency pump shut off in Section 5202.4.7."

   See figure 22: Page 14-67 and figure 27: Page 14-72, which are the Processor ESO (Emergency Shut-Off) wiring diagrams.

8. Because of multiple ways to install the electrical based on cost, the level of motor protection, electrical components used, placement of such electrical components, and local jurisdiction requirements, this manual presents just the basic electrical requirements for the ECS Membrane *Processor*.

9. Internal motor automatic thermal re-sets or thermostat:

Phase	Included	
Single Phase	Blower	yes
	Vacuum Pump	yes
Three Phase	Blower	yes
	Vacuum Pump	yes

12.5 Power for the Motors

12.5.1 Single-Phase Processor

- Breakers rated at 115v, single-phase power the two electric motors in the *Processor.*
  - ► This breaker should be a delayed-trip motor starting type.
  - ► See Figure 20: Page 14-56.
  - ► See Figure 21: Page 14-66.
  - ► See Figure 22: Page 14-67.

- Single-phase motors wiring diagrams:
  - ► See Figure 23: Page 14-68 for the vacuum pump single-phase motor wiring diagram
  - ► See Figure 24: Page 14-69 for the blower single-phase motor wiring diagram

12.5.2 Three-Phase Processor

- Breakers rated at 208/230-460v, three-phase power the two electric motors in the *Processor.*
  - ► This breaker should be a delayed-trip motor starting type.
  - ► See Figure 25: Page 14-70.
  - ► See Figure 26: Page 14-71.
  - ► See Figure 27: Page 14-72.

- Three-phase motors wiring diagrams:
  - ► See Figure 28: Page 14-73 for the vacuum pump three-phase motor wiring diagram.
  - ► See Figure 29: Page 14-74 for the blower three-phase motor wiring diagram.

12.5.3 Power for the HC Sensor in both the Single-Phase and the Three-Phase Processor

- 115v, 2-amp dedicated service to power the 24VDC power supply for the HC sensor and HC sentry.

CAUTION

Always obtain approval from the local authority having jurisdiction.

Installation of the *Processor* must comply with (if applicable):

- CARB CP-201
- VST EVR E.O.
- Fire Marshall
- Water Board
- Local Air Pollution District
- ICC
- NEC
- NFPA 30 and 30A
- UL
- Any other applicable federal, state, and local codes

12.6 Power for the Heat-Trace Cables in both Single-Phase and Three-Phase Processors

- 115v circuit powers the heat-trace cable.
  - ► The negative side of the circuit is off a common neutral with a common ground inside the electrical enclosure located inside the *Processor*.

12.7 Power for the Motor Starter Relay Coil

- 115v circuit provides power to the relay coil.

12.8 Optional Convenience Outlet at the **Processor**

- An optional convenience outlet located near the *Processor* may be installed for powering tools and test equipment.

CAUTION: The optional convenience outlet located near the Processor CANNOT be installed in a Class 1, Div. 2 hazardous area.

  - ► The wires for the convenience outlet can go in the same conduit as the motor power wires.

- Seal-offs are required as per NFPA 70 for a conduit run leaving a Division 2 location to an unclassified location.
  - ► Install as required by the NEC and local authority having jurisdiction.

- Other seal-offs may be necessary based on the installation and site specifics.

13 Electrical Installation

13.1 Electical Safety

- The *Processor* uses lethal voltages and operates in areas where gasoline vapor may be present.
- Serious injury or death from electrical shock, fire, or explosion may result if the power in ON during installation, testing, or maintenance.
- Be sure to use Lockout/Tag-Out procedures when working on or installing the *Processor* or while working on electrical components.
- Always power OFF any electrical components connected to the *Processor*. The *Processor* can start automatically.
- Do not use tools that can generate sparks if there is risk of flammable or explosive vapors being present.
- Read and understand all materials related to installing, testing, and operating the *Processor* prior to installation.

13.2 Electrical Installation Code Requirements

- According to NFPA 30:
  "Electrical wiring and electrical utilization equipment shall be a type specified by and be installed in accordance with NFPA 70. Electrical wiring and electrical utilization equipment shall be approved for the locations in which they are installed."
- All electrical wiring and electrical utilization equipment must be installed to meet federal, state, and local codes.
- Flexible electrical conduit connections to the Processor may be required by local jurisdictions to meet seismic code requirements.

13.2.1 Single-Phase Processor Configuration

- The ECS motor-starter relay can be installed inside the GDF's electrical room or at the *Processor*, depending on the electrical design.
- Install properly-sized conduit from the electrical room to a lockable, safety disconnect-switch (located near the *Processor).*
- From the disconnect switch to the *Processor:*
  - ► The first ¾" rigid conduit is for the 115v vacuum pump and blower motors. It is also for 115v power for the heat trace cable.
  - ► The second ¾" rigid conduit is for 24VDC and HC signal control wiring.

If you are using existing conduit, it is acceptable by VST to run the electrical and the communications through the same conduit, provided that the local jurisdiction authorizes doing so.

BE SURE TO CHECK WITH LOCAL AUTHORITIES.

13.2.2 Three-Phase Processor Configuration

- The ECS motor-starter relay can be installed inside the GDF's electrical room or at the *Processor*, depending on the electrical design.
- Install properly-sized conduit from the electrical room to a lockable, safety disconnect-switch (located near the *Processor).*
- From the disconnect switch to the *Processor:*
  - ► The first ¾" rigid conduit is for 208/230-460v vacuum pump and blower motors. It is also for 115v power for the heat trace cable.
  - ► The second ¾" rigid conduit is for 24VDC and HC signal control wiring.

If you are using existing conduit, it is acceptable by VST to run the electrical and the communications through the same conduit, provided that the local jurisdiction authorizes doing so.

BE SURE TO CHECK WITH LOCAL AUTHORITIES.

13.3 Single and Three-Phase Processors

- Install the electrical / communications conduit(s) sized to meet NEC and local code standards from the electrical room to a lockable, safety disconnect-switch.
  - ► THE NEC REQUIRES THAT A LOCKABLE, SAFETY DISCONNECT-SWITCH BE LOCATED NEAR THE PROCESSOR.
  - ► Flexible electrical conduit connections to the Processor may be required by local jurisdictions to meet seismic code requirements.

- Install either one or two ¾" diameter conduit connections on the *Processor*.
  - ► There are two ¾" diameter conduit connections on the *Processor*.
  - ► The contractor may decide to use either one or both of these conduits depending on:
    - The configuration of the electrical switch
    - Single phase or three phase *Processor*
    - Size of the wire used in the *Processor*

13.3.1 Wiring between the Processor and components:

- All wiring (208/203-460 VAC and 24 VDC) to be TFFN or THHN with 600 V insulation.
- All wiring must be gasoline and oil resistant.
- VST provides the 24VDC power supply for the HC Sentry module.
  - ► The 24VDC power-supply plugs into a dedicated 115v outlet.
  - ► The 115v outlet must be located within 3-feet of the HC sentry module.
- The HC sensor receives 24VDC power from the HC sentry module, and the HC sentry module receives 4-20 mA control signal from the HC sensor.
  - ► One cable contains the 24VDC power and 4-20 mA signals.
  - ► The cable must be a minimum 3 conductor, 18 AWG, twisted pair with a shielded ground.
  - ► The isolated ground is connected to the HC Sentry. The HC Sentry receives power from a separate 115V circuit.
- Run two ground wires from the electrical panel:
  - ► 1st ground wire is the equipment ground.
  - ► 2nd ground wire is an electrical ground.
  - ► Both grounds must be a minimum 12 AWG (follow all NEC requirements for equipment grounding).

- Wiring the 208/230-460v or 115/230V power for the motors is a minimum 14 AWG:
  - ► Sizing must comply with NEC requirements for motor load and wiring distance.
  - ► Larger gauge wire may be necessary based on conductor length and voltage supplied by the load center.
- NEC recommends a maximum conductor voltage drop of 3%, but notes that with a conductor voltage drop of 5%, most devices should operate with acceptable efficiency.

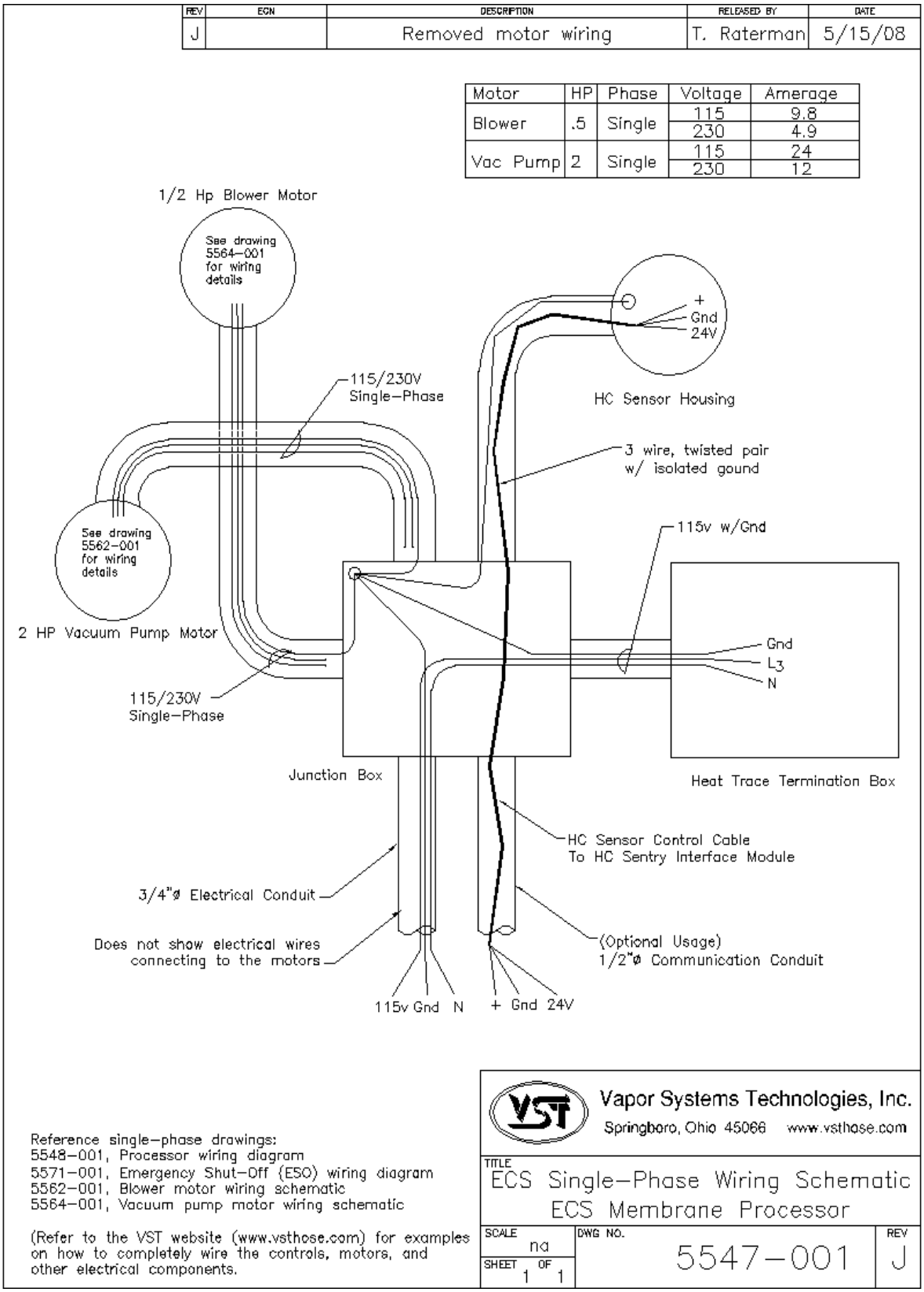

Figure 20: Single-Phase Wiring Schematic

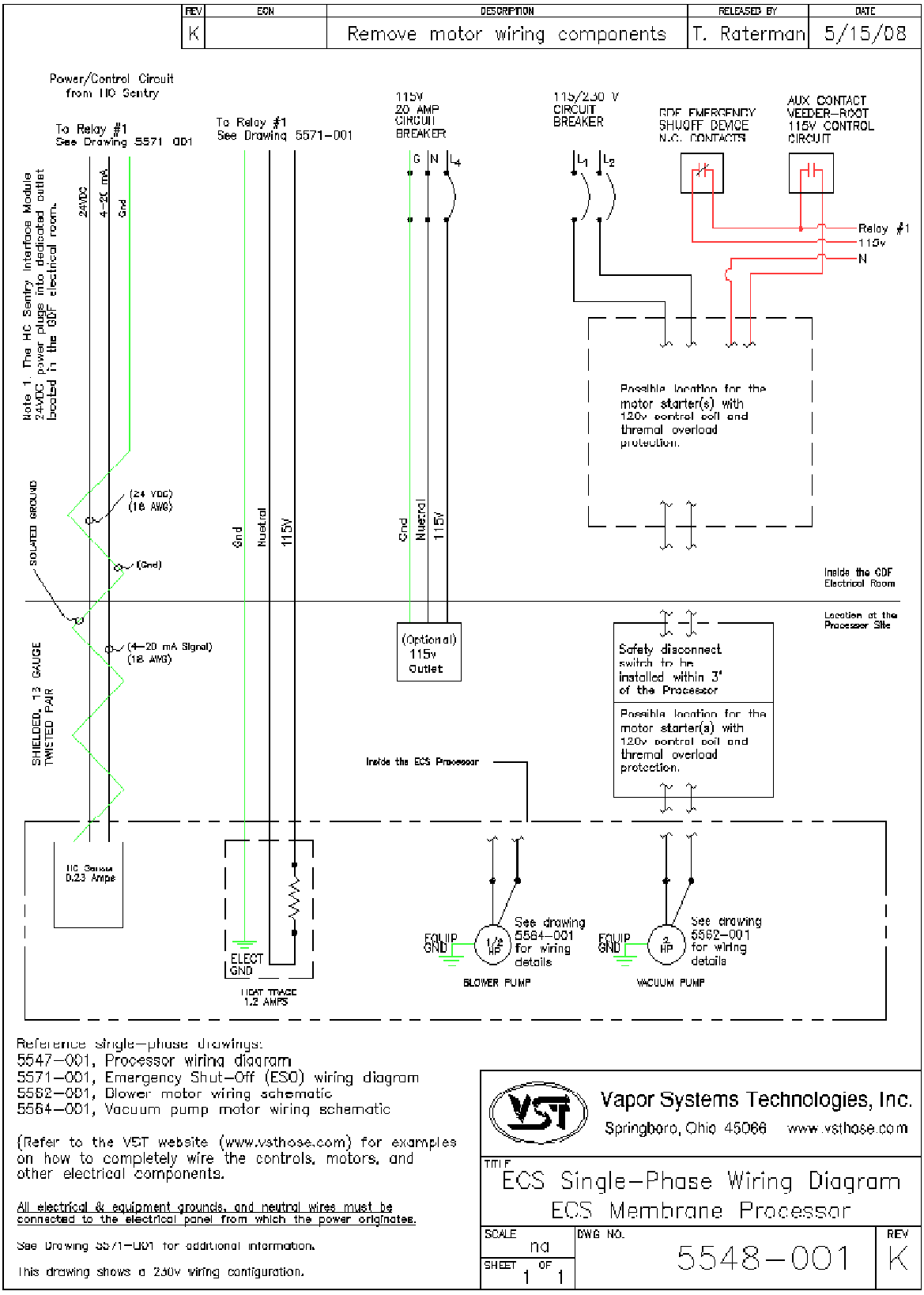

Figure 21: Processor Single-Phase Wiring Diagram

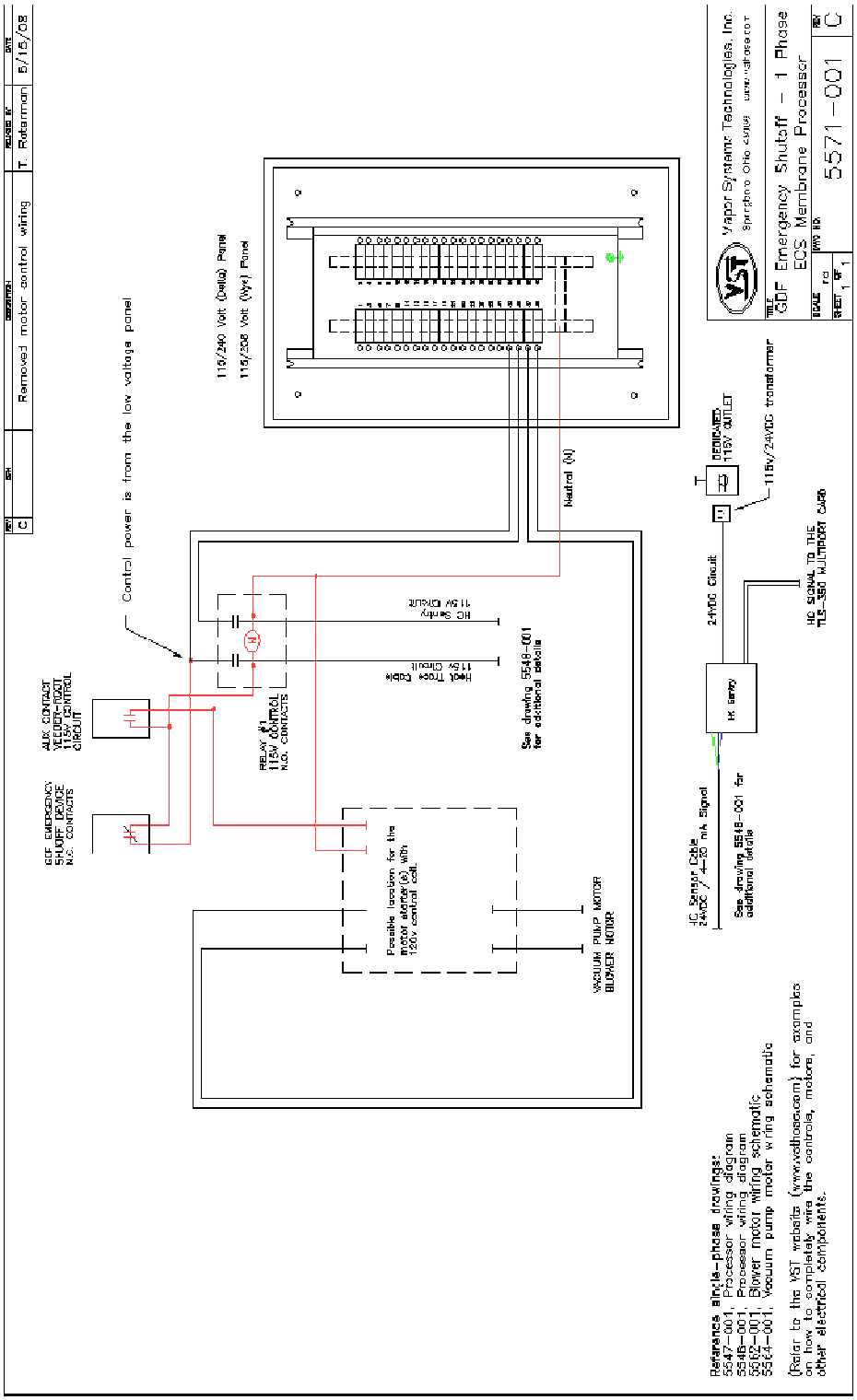

Figure 22: Processor Single-Phase ESO Wiring Diagram

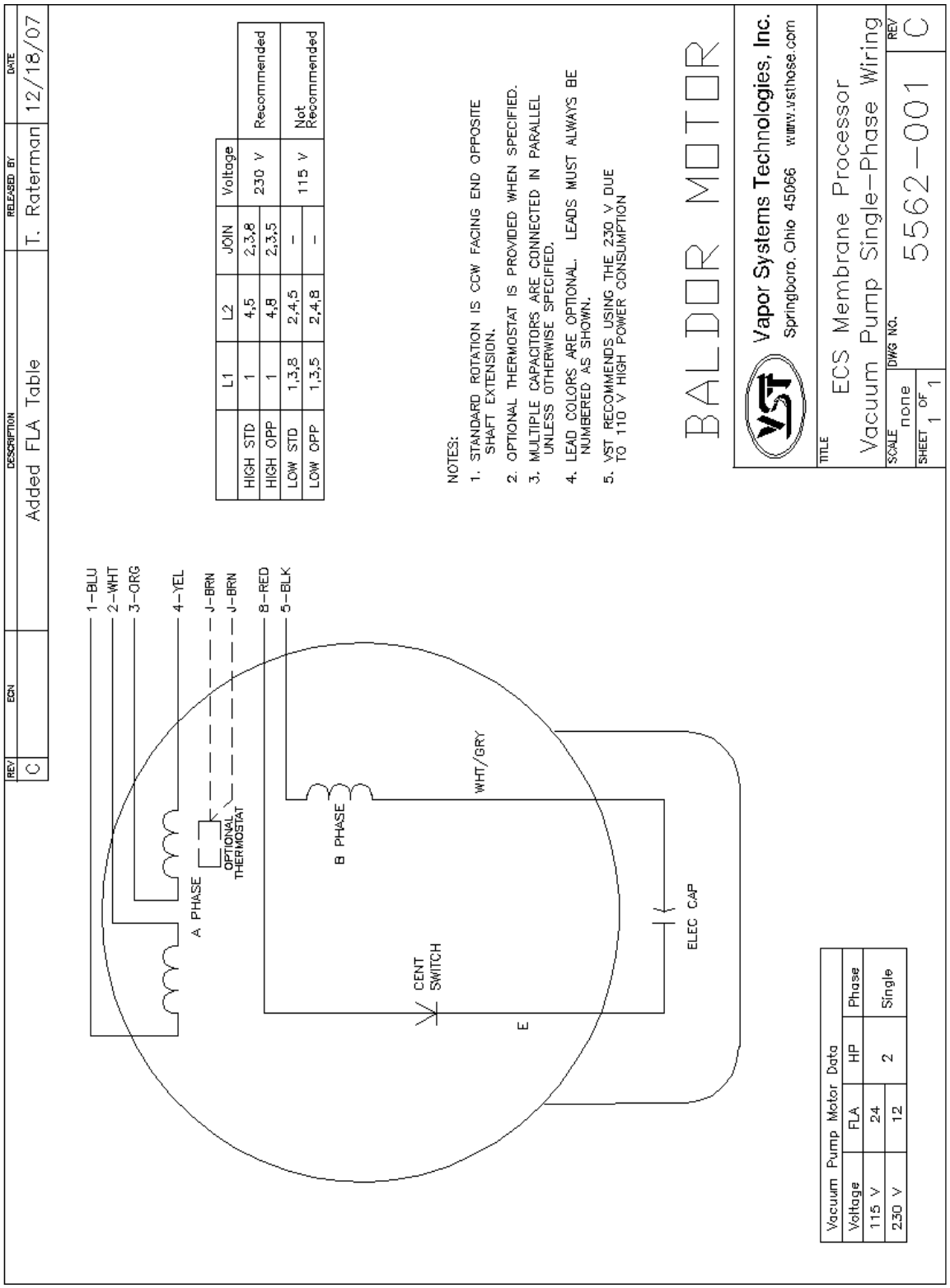

	L1	L2	JOIN	Voltage	
HIGH STD	1	4,5	2,3,8	230 V	Recommended
HIGH OPP	1	4,8	2,3,5		
LOW STD	1,3,8	2,4,5	–	115 V	Not Recommended
LOW OPP	1,3,5	2,4,8	–		

Figure 23: Vacuum Pump: Single-Phase Motor Wiring Diagram

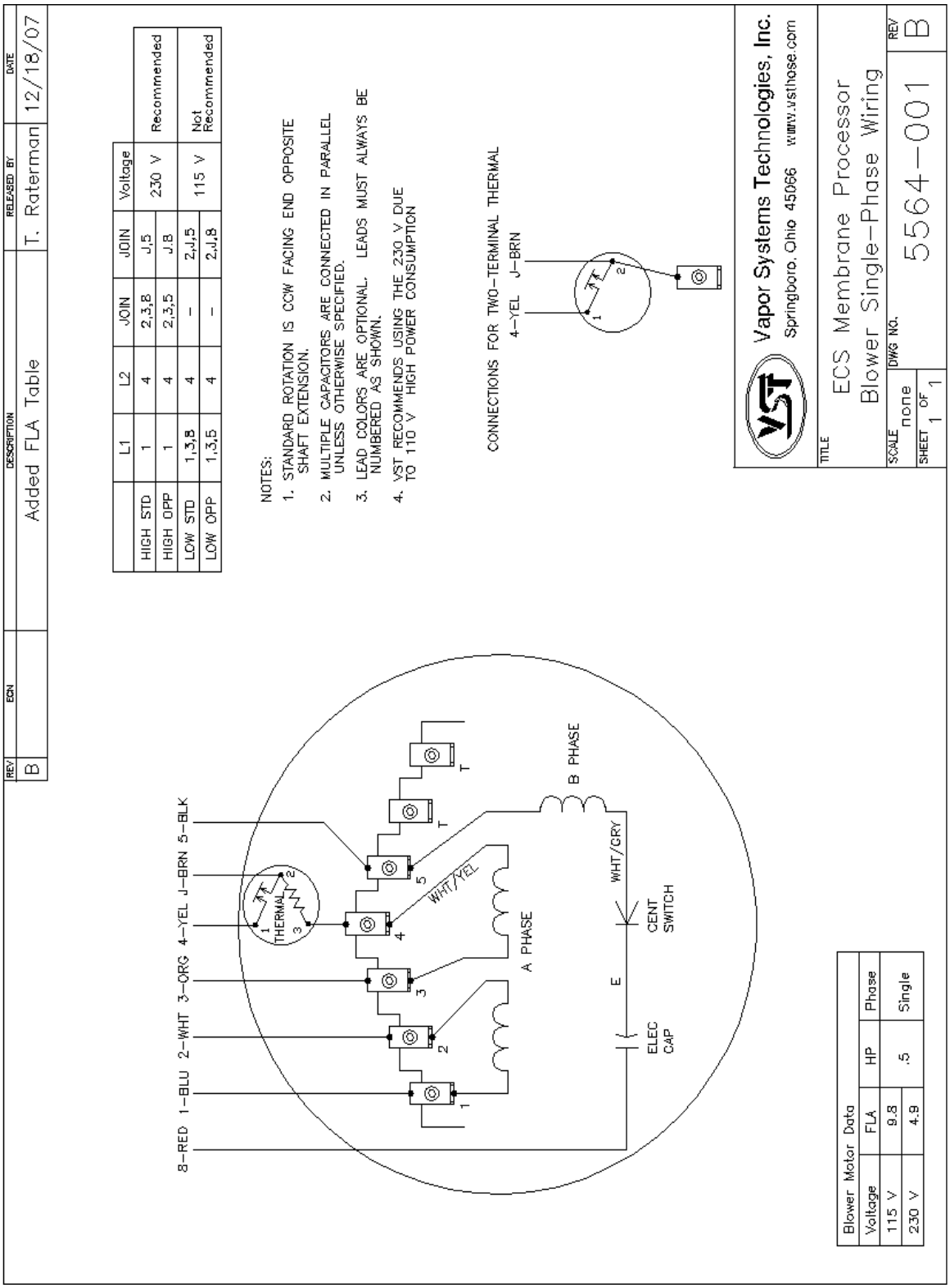

Figure 24: Blower: Single-Phase Motor Wiring Diagram

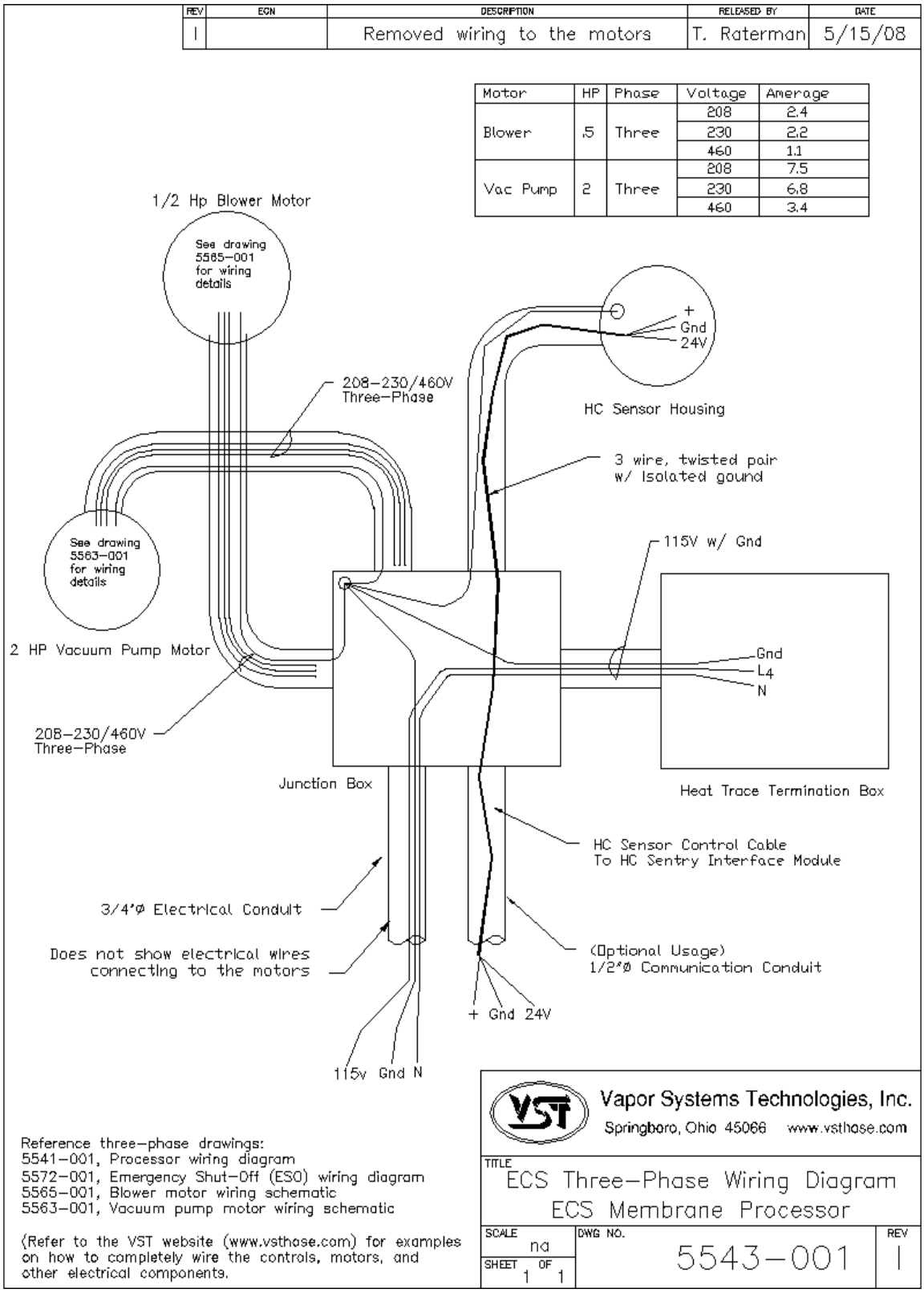

Figure 25: Processor Three-Phase Wiring Schematic

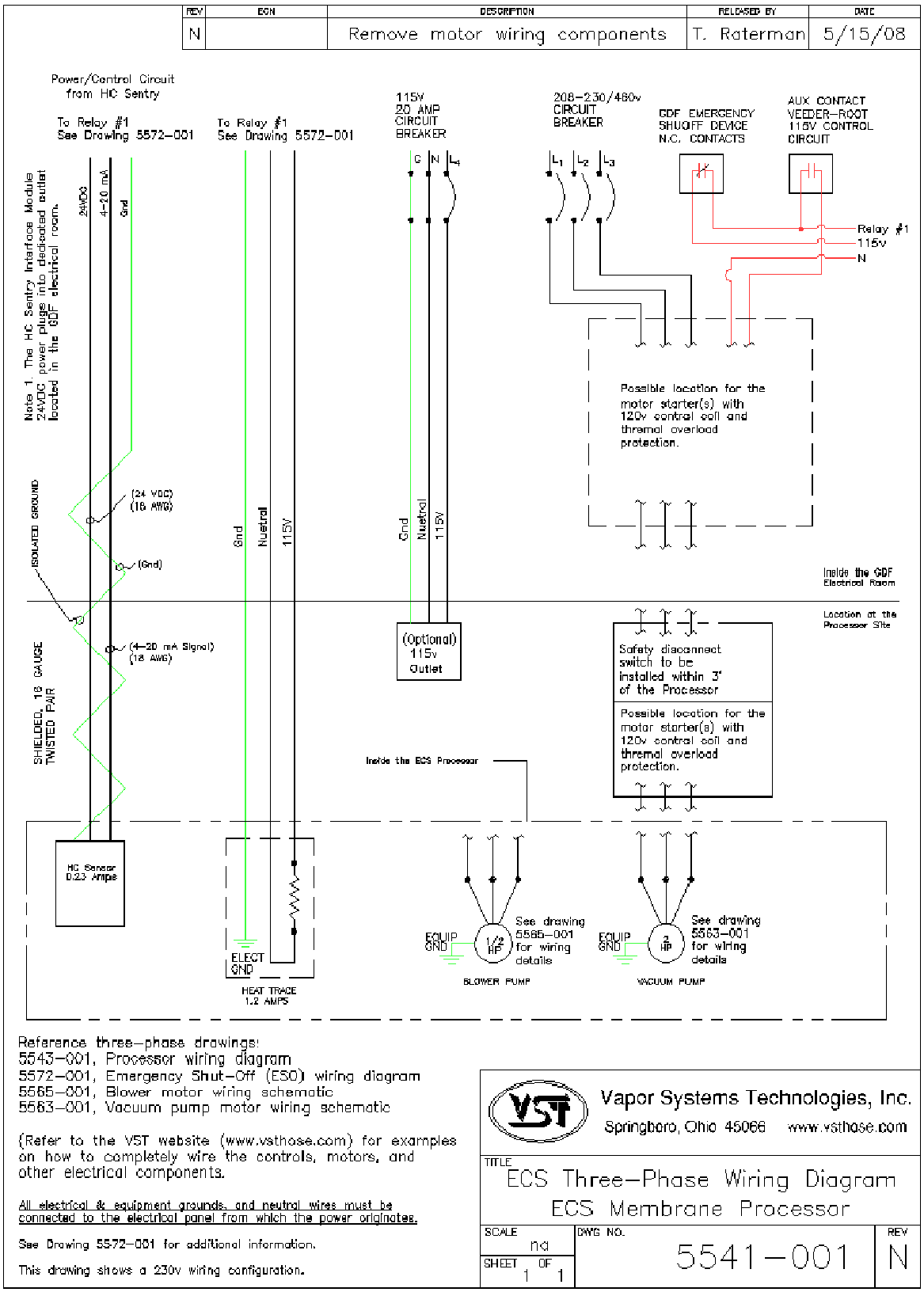

Figure 26: Processor Three-Phase Wiring Schematic

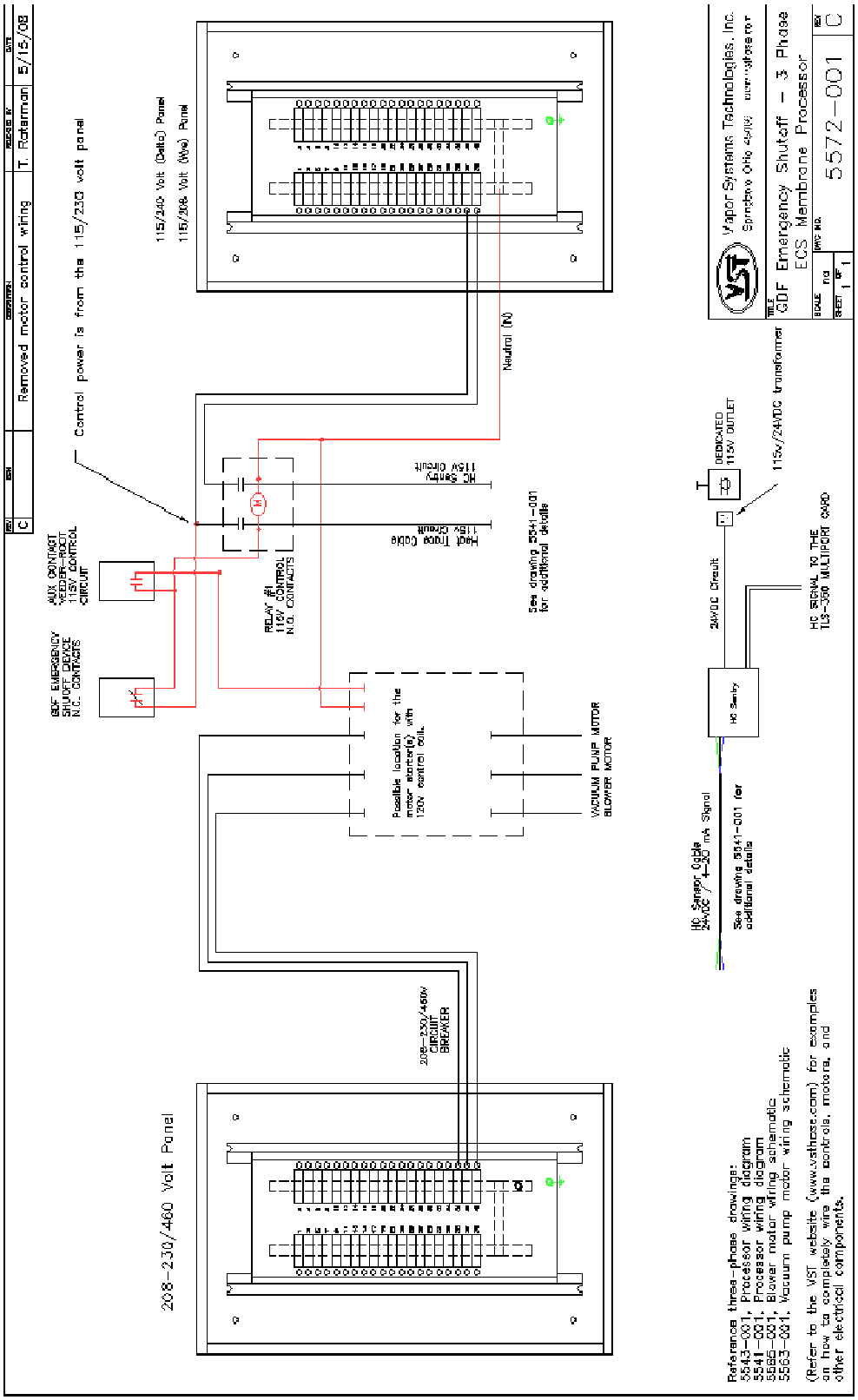

Figure 27: Processor Three-Phase ESO Wiring Diagram

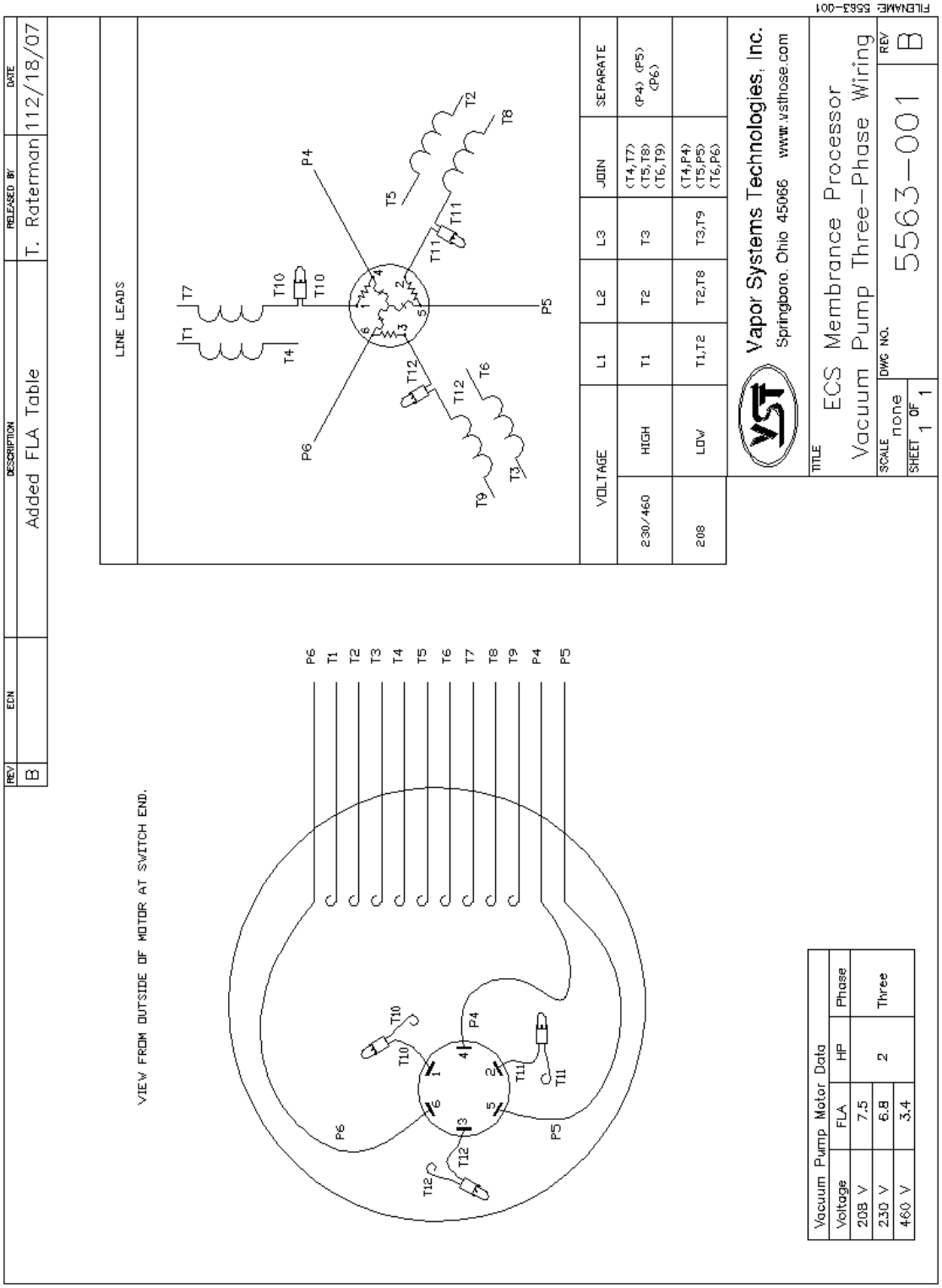

Figure 28: Vacuum Pump: Three-Phase Motor Wiring Diagram

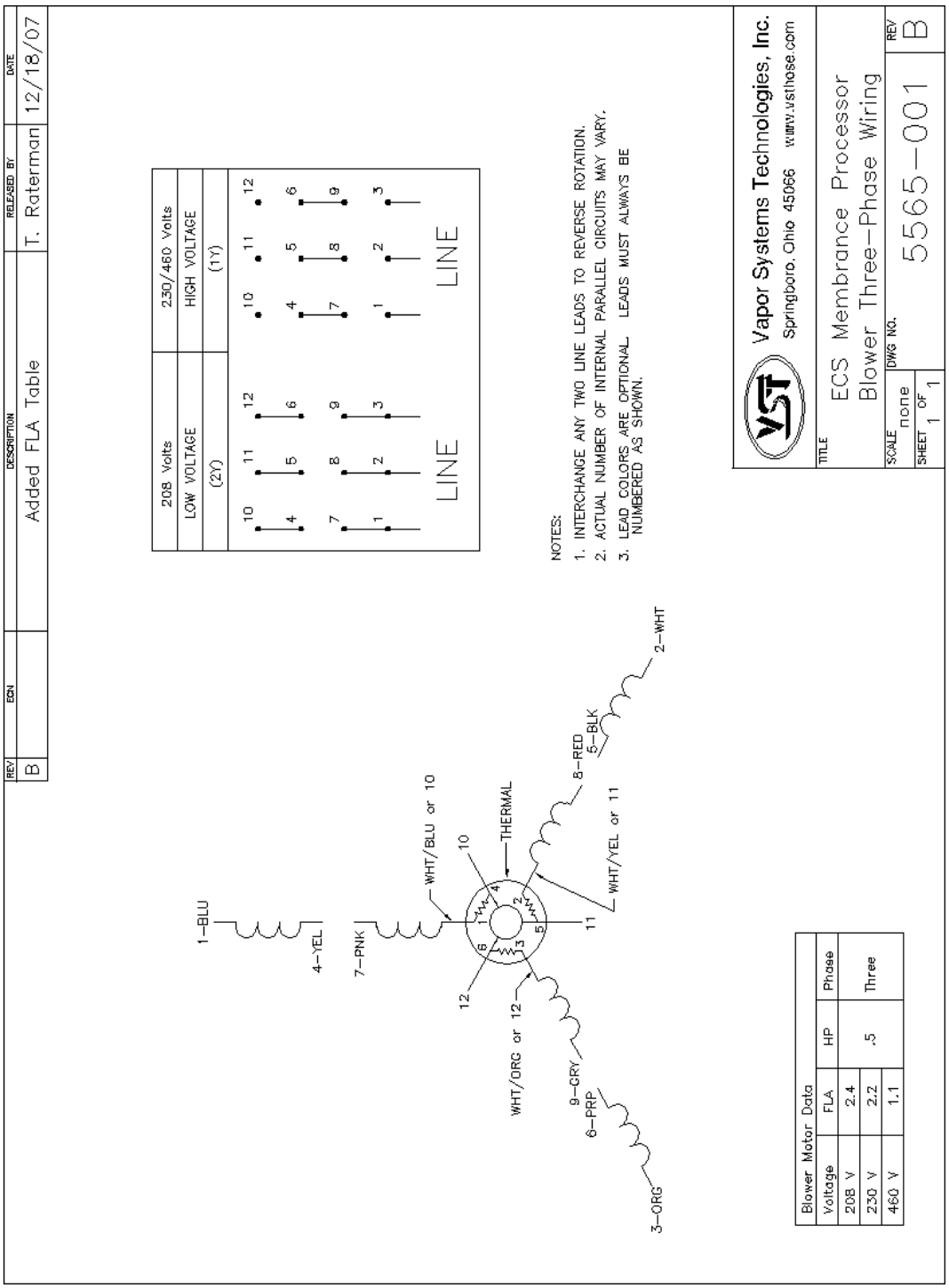

Figure 29: Blower: Three-Phase Motor Wiring Diagram

13.4 Auxiliary Output Relay

- Run two wires from motor relay contacts to the Veeder-Root TLS.

DO NOT MAKE THIS FINAL CONNECTION.

THIS FINAL CONNECTION IS TO BE MADE AT THE TIME OF START-UP.

THIS ACTION REQUIRES THAT THE VST ASC (LEVEL C) BE A VEEDER-ROOT CERTIFIED CONTRACTOR WITH A MINIMUM OF VEEDER-ROOT LEVEL 1, OR 2/3, OR 4 CERTIFICATION.

► The user interface is equipped with an Auxiliary Output Relay for external monitoring of the *Processor*.

- The 115V control voltage for the motor control contactor is from the 115V electrical panel.

- This relay will be used when the *Processor* is installed with a PMC or an ISD system as specified by CARB Enhanced Vapor Recovery Program.

- When the *Processor* is powered and operating normally, the auxiliary relay is energized (green LED on Auxiliary Relay is lit).

- In ISD, when the *Processor* is powered off (either manually or due to an alarm mode), or is in alarm mode, the auxiliary relay is de-energized.

- Auxiliary relay contact rating: 240V, 6A with 4000V isolation.

► Connect the *Processor* motor control relay on either the 4-Relay Module or the I/O Combination Module.

► DO NOT CONNECT TO POWER

► See Figure 30: Page 14-76.

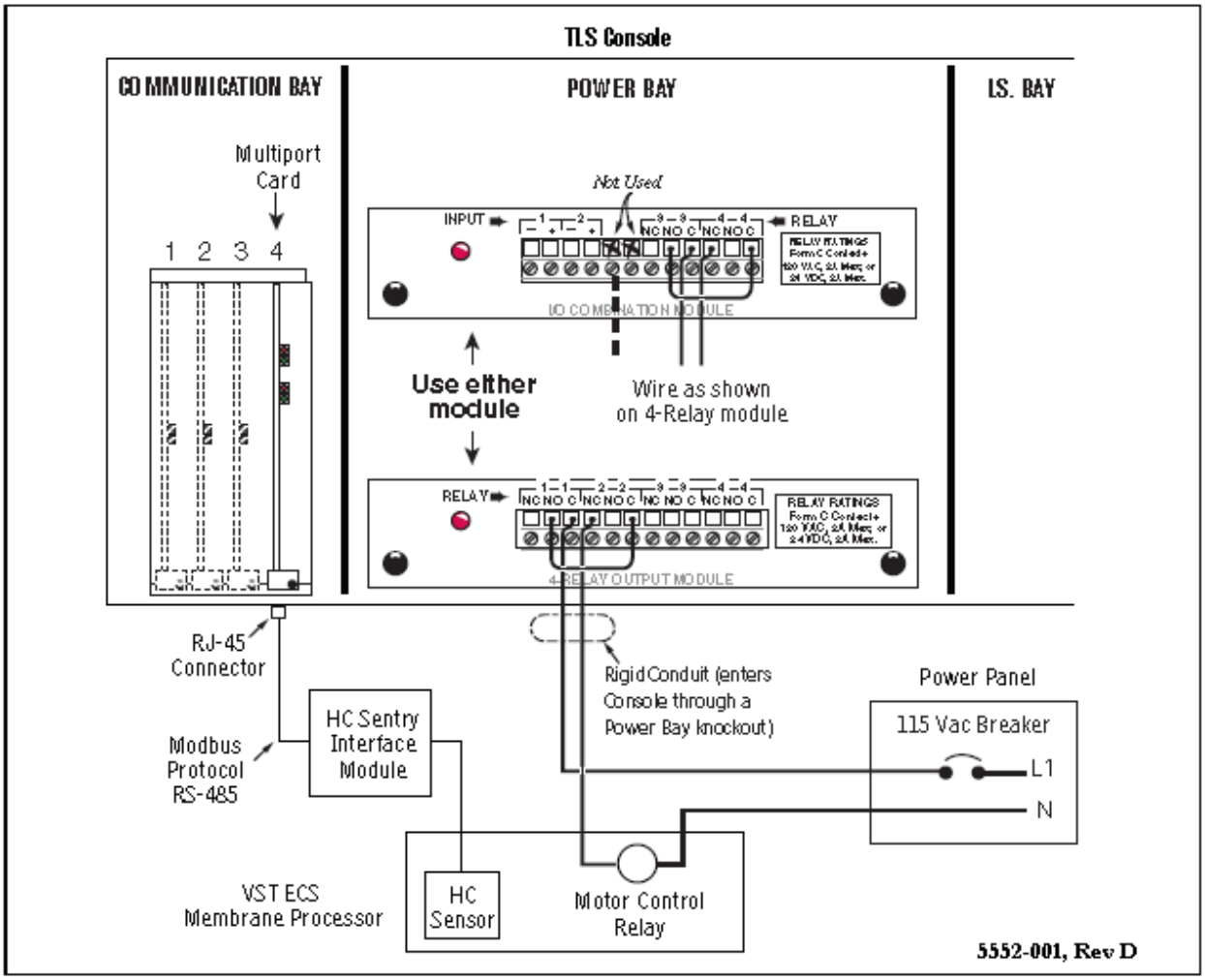

Figure 30: VR TLS Multi-Port Card Connection to HC Sentry Module

13.5 HC Sensor / HC Sentry

- Using 24 VDC, the HC sentry provides power to the HC sensor.
- A 115V / 24 VDC converter from a 115V outlet powers the HC sentry.
- A 3-wire, 18 ga. shielded twisted-pair cable connects the HC sensor to the HC sentry for the 24 VDC power, the 4-20mA signal, and an isolated ground.
- Install an equipment ground to the HC sensor housing.

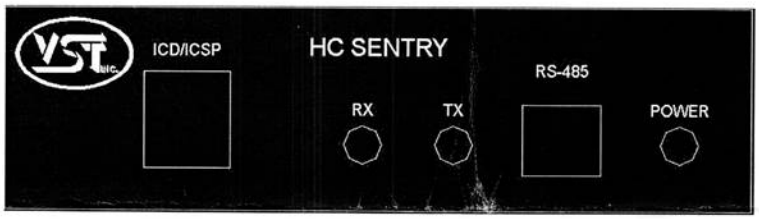

ICD/ICSP: This connector provides a means for performing in-circuit-debug and in-circuit-serial-programming utilizing the programming and debugging tools from the processor manufacturer. This connector will typically be used in production to perform initial programming, and could be used as a simple field method for updating a device.

RX: This led flashes to indicate received data via the RS485 link.

TX: This led flashes to indicate transmitted data via the RS485 link.

RS-485: This two-pin connector provides the link to the TLS, RS-485 network.

POWER: This led indicates that the HC Sentry device is powered up.

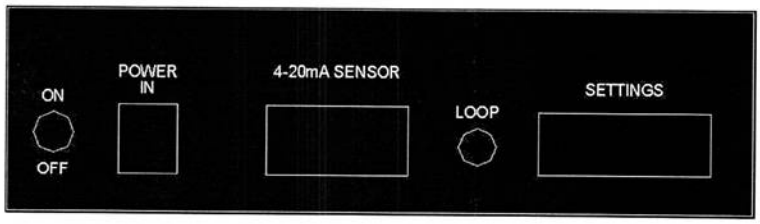

ON/OFF: Switch for turning the device power on and off.

Figure 31: HC Sentry Front & Back Views

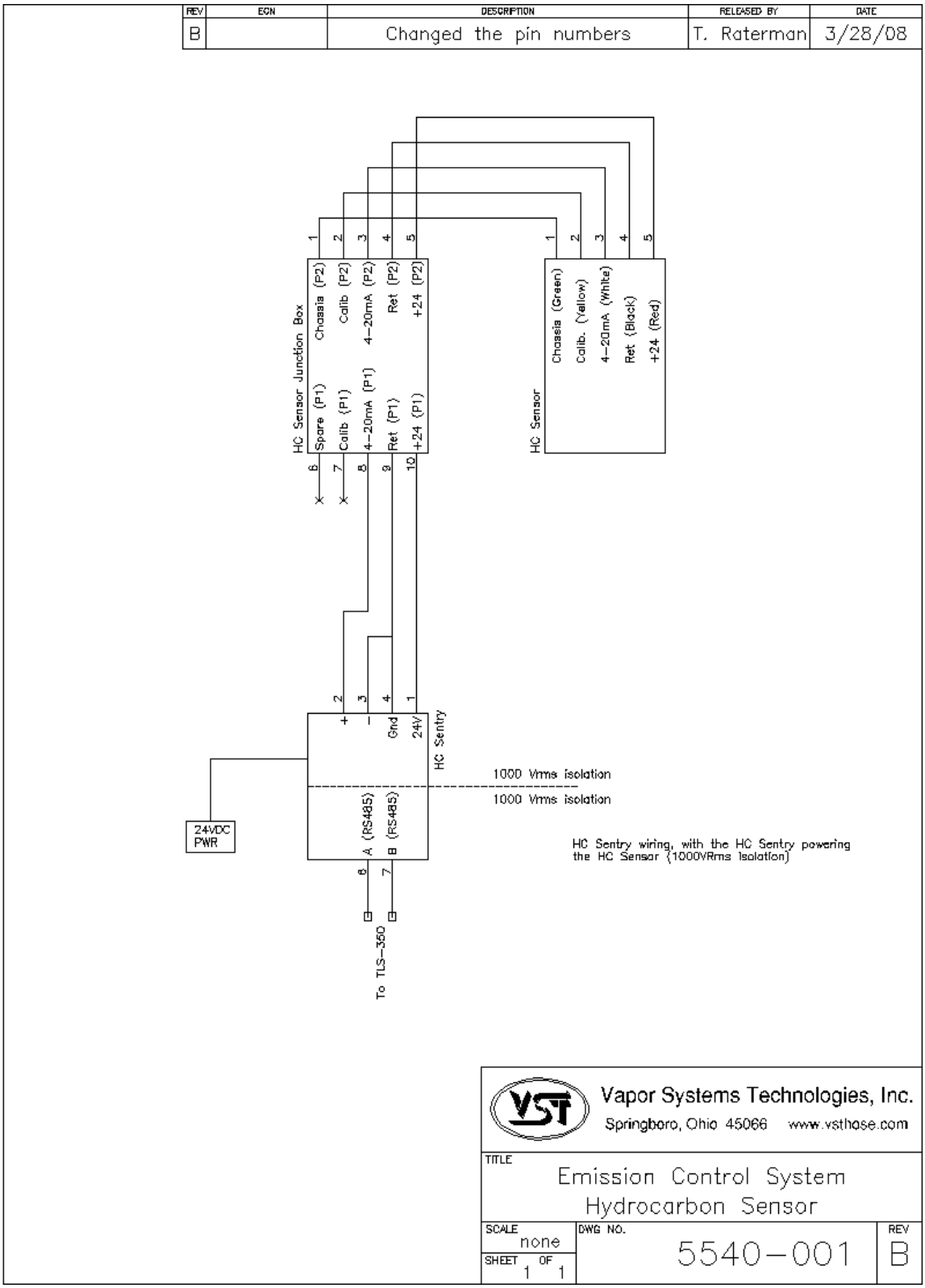

Figure 32: HC Sentry and HC Sensor Wiring Diagram

REV	ECN	DESCRIPTION	RELEASED BY	DATE
A			T. Raterman	4/23/07

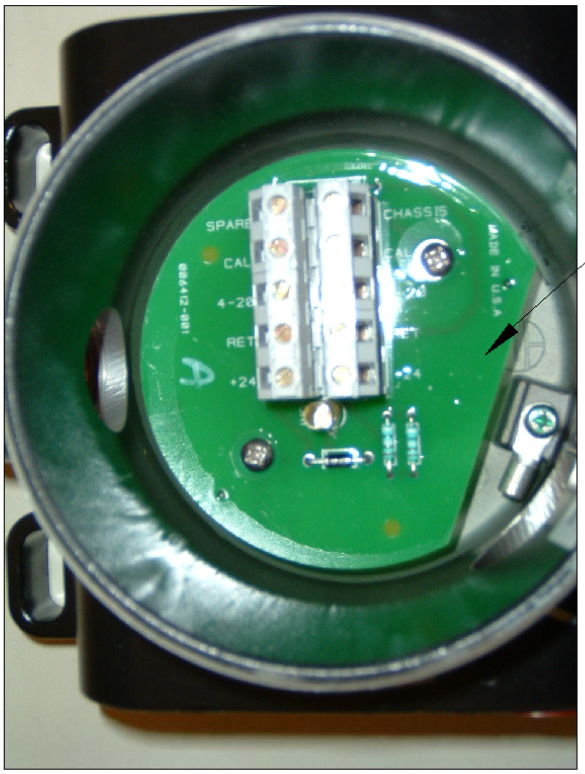

HC Sensor Junction box

HC Sentry (Front)

HC Sentry (Back)

Vapor Systems Technologies, Inc.
Springboro, Ohio 45066 www.vsthose.com

TITLE
Emission Control System
Hydrocarbon Sensor

SCALE	DWG NO.	REV
none	5538-001	A
SHEET 1 OF 1		

Figure 33: HC Sensor and HC Sentry Pictures

13.6 Multiport Card for Vapor Processor Communication

- Run wire from HC sentry to TLS
  - ► This action requires that the VST ASC (Level B) be a Veeder-Root Certified Contractor with Level 1, or 2/3, or 4 certification.
- The HC sensor is powered by the HC Sentry Interface Module using 24VDC power.
- Power required for the HC Sentry Interface Module is 24VDC power supply plugged into an 115VAC outlet.
- A three-wire, 18-gauge, shielded twisted-pair cable connects the HC sensor to the HC Sentry Interface Module for the 24VDC power, the 4-20mA signal, and an isolated ground.
- The wiring from the HC sensor is connected to the two twisted pair wires inside the HC electrical housing.
- See Figure 34: Page 14-80 - TLS / HC Sentry RS-485 Cable for the wiring diagram.
  - ► VST provides the HC Sentry Interface Cable.

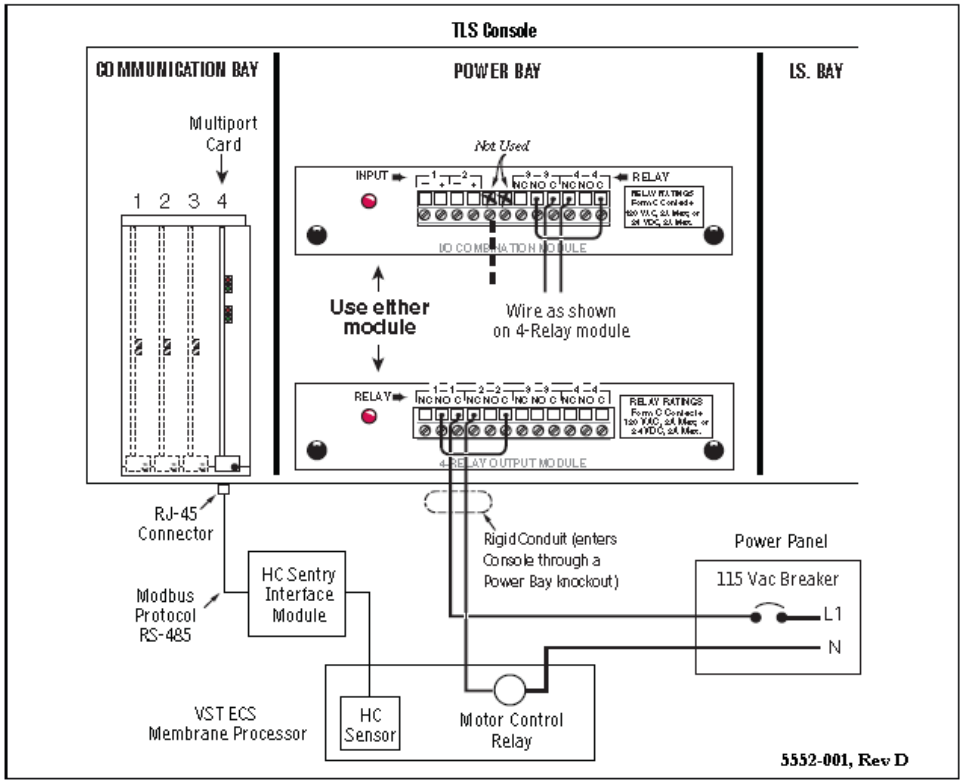

Figure 34: VR TLS Multi-Port Card Connection to the HC Sentry Module

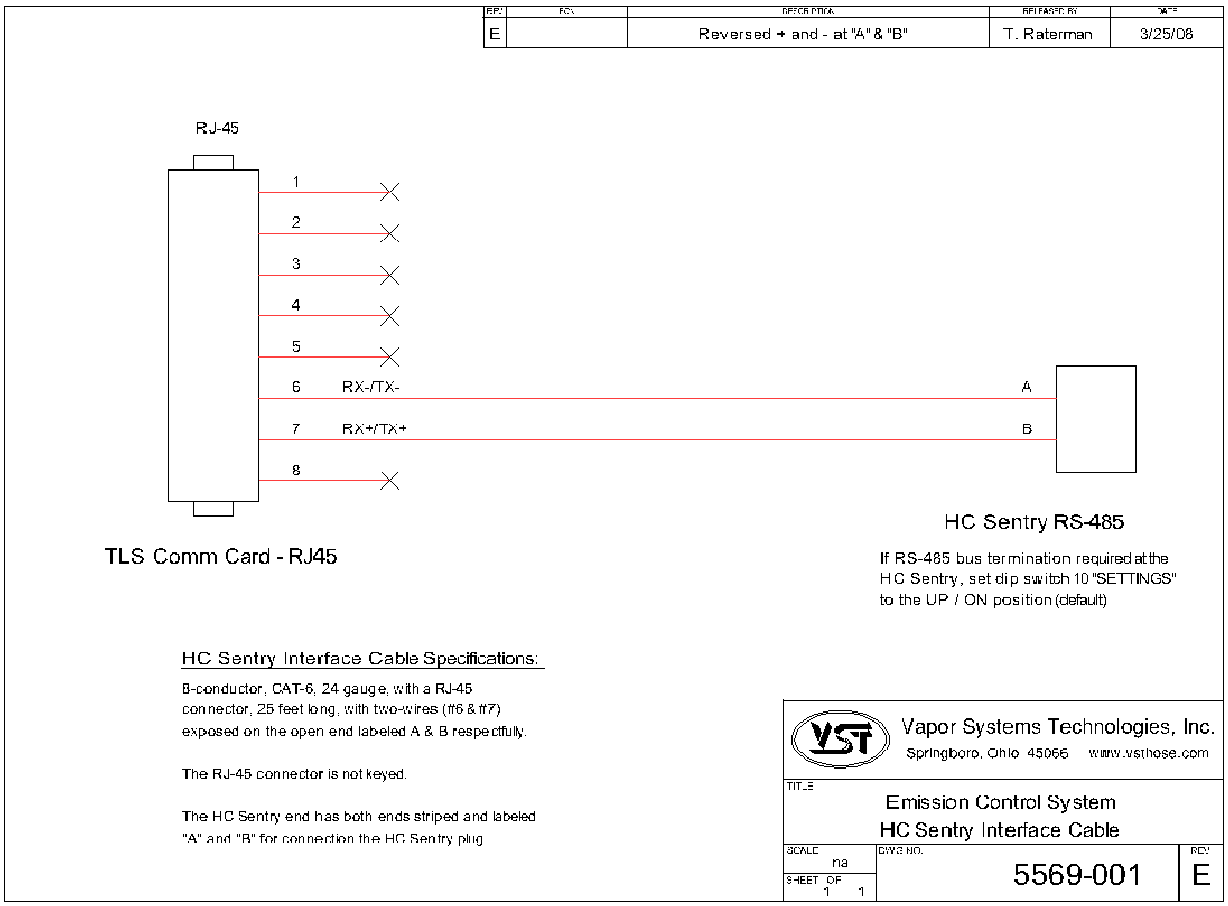

Figure 35: HC Sentry RS-485 Cable Wiring Diagram

13.7 Veeder-Root TLS 350 with PMC or ISD Controls

- The *Processor* is controlled by a Veeder-Root (VR) TLS-350 with a PMC or ISD software package.
- The pressure sensor is located in a dispenser closest to the UST's and is supplied by Veeder-Root as part of the Veeder-Root TLS-350 with a ISD control package.
- VST will supply the HC Sentry Interface Module with 115VAC/24VDC power supply as part of the *Processor*.
- The HC Sentry Interface Module converts the 4-20 mA signals from the HC sensor to a proprietary signal the TLS-350 will recognize.
- VST provides the HC Sentry Interface cable that connects the HC Sentry to the Multiport Card in the TLS Communication Bay.
- VST does not provide the TLS-350 controller or the software required by the TLS-350.

5554-001

Figure 36: VR TLS-350

14 Post-Installation Checklist

Post-Installation Checklist				Attach product sticker with bar code here
VST ASC #:	Date:			
ASC Name:				
VST-ASC Certification Level	❑ A ❑ B ❑ C			
ASC Company:				
GDF Name:				
Address:				
City:	State:	Zip Code:		
GDF Contact Person Name:				
GDF Contact Person Title:				
GDF Contact Person Phone:		E-mail:		

Notes: Use this form to note details of the post-installation tests

Checkpoints Site Components	Yes	No	Un-known	If No or Unknown, explain
Pressure sensor installed	❑	❑	❑	
TLS-350 with ISD software installed	❑	❑	❑	
HC sentry connected to the TLS	❑	❑	❑	
Processor Leak Check	❑	❑	❑	
All vapor piping sloped away from the Processor	❑	❑	❑	
All vapor piping line size meets CP-201 requirements	❑	❑	❑	
All vapor piping slope meets CP-201 requirements	❑	❑	❑	
Checkpoints Site Components	Yes	No	Un-known	If No or Unknown, explain
All warranty information has been filled out and sent to VST	❑	❑	❑	
All connections from the *Processor* to the UST's are correct	❑	❑	❑	
The *Processor* has not been installed in a Class I, Div. 1 or Class I, Div. 2 area	❑	❑	❑	
The electrical installation meets NEC, federal, state, and local standards	❑	❑	❑	
The *Processor* installation meets CP-201 requirements	❑	❑	❑	
The ECS *Processor* has been installed per installation instructions	❑	❑	❑	

The above tests were performed in accordance with IOM found in the VST's Executive Orders.

ASC Signature

Operation, Maintenance & Set-Up Manual

ECS Membrane Processor: PMC and ISD

Part: VST ECS-CS3-310 – Three Phase
VST-ECS-CS3-110 – Single Phase

Executive Orders: VR-203
VR-204

Version: 1.0 (g)

Vapor Systems Technologies, Inc.
650 Pleasant Valley Drive
Springboro, Ohio 45066
937-704-9333 PH
937-704-9443 FX
www.vsthose.com

Table of Contents

Table of Figures 5
About VST 7
Notice 7
Warranty 8
Warranty Cards 9
Components and Warranties 10
Activating the Processor Warranty 11
VST Contractor Requirements 12
Veeder-Root Contractor Requirements 13
Safety Icons 14
Table of Terms & Abbreviations 15
1 ECS Membrane Processor Overview 16
1.1 ECS Membrane Processor Theory of Operation 16
1.2 Overview of How the Processor Operates 17
1.3 Processor Dimensions and Weight 17
1.4 Processor Components and Their Purpose 18
1.5 Processor Auxiliary Components 20
1.6 Processor Manuals 20
2 *Processor* Operation 26
2.1 TLS 350 Construction 26
2.2 Automatic Control 27
2.3 Manual Control of the Processor 28
2.4 TLS Alarms 29
2.5 Thresholds and Algorithms 29
2.5.1 TLS-350 (PMC): Alarm Troubleshooting Summary 32
2.5.2 TLS-350 (ISD): Alarm Troubleshooting Summary 33
3 Post-Installation Power-Up Tests 35
3.1 Post-Installation Electrical Connections 35
3.2 Required Post-Installation Power-Up Tests 37
3.3 TLS Manual Mode 39
3.4 Electrical Connection Test 41
3.5 Motor-Rotation Test 41
3.6 Heat-Trace Continuity Test 47
3.6.1 Preparing the heat trace electrical junction box for the test: 47

3.6.2 Testing the heat trace circuit 47
3.7 HC Sensor and HC Sentry Power Test 48
3.7.1 Checking 24 VDC Power to the HC Sensor 48
3.7.2 Checking 24VDC Power to the HC Sentry Module 49
3.8 Processor Leak Test 50
3.8.1 Tools needed to conduct the Processor Leak Test: 50
3.8.2 Conducting the Leak Test 51
3.9 Preparing the Processor for Field Operation 52
3.9.1 Setting the TLS-350 Threshold Values 52
3.9.2 Processor Configuration Prior to Start Up 52
3.10 Post-Installation Power-Up Checklist 53
4 Processor Start-Up 54
4.1 Processor Shut-Down Procedure 55
4.1.1 Processor Shut-Down Procedure 55
4.1.2 HC Sensor and HC Sentry Module 55
4.1.3 Heat-Trace Cable 55
5 Processor Maintenance 56
5.1 Annual System Compliance Testing 57
5.2 Annual Inspections and Replacements 58
5.3 Preventative Maintenance Checklist Form 59
5.4 GDF Maintenance Record 60
6 Blower Replacement 61
6.1 Blower Replacement Safety 61
6.2 Removing the Blower 61
6.3 Installing the New Blower 62
7 Vacuum Pump Replacement 64
7.1 Safety 64
7.2 Removing the Vacuum Pump 64
7.3 Installing the new Vacuum Pump and Vacuum Pump Motor Assembly 65
8 Membrane Replacement 68
8.1 Safety 68
8.2 Removing the Membrane from the Membrane Housing 68
8.3 Installing the New Membrane 70
9 Drive Coupling Rubber Insert Replacement 71
9.1 Safety 71
9.2 Removing the Drive Coupling Insert 71
9.3 Installing the Drive Coupling Insert 72
10 Heat Trace Cable Replacement 74
10.1 Safety 74
10.2 Removing the Heat Trace Electrical Box 74

10.3 Overview for Installing the New Heat Trace Cable 75
10.4 Steps for Installing the New Heat Trace Cable 75
11 Hydrocarbon Infrared (HC IR) Sensor Module Replacement 86
11.1 Safety 86
11.2 Removing HC IR Sensor from the HC IR Sensor Module Electrical Housing 87
11.3 Installing a New or Re-calibrated HC IR Sensor Module to the HC IR Sensor Module Electrical Housing 89
12 Forms 91
12.1 Preventative Maintenance 92
12.2 Preventative Maintenance Checklist Form 93

Table of Figures

Figure 1: VST Registration Card 9
Figure 2: ECS Membrane Processor Sticker 9
Figure 3: How the Processor fits into the GDF layout 21
Figure 4: Processor Piping Diagram 22
Figure 5: ECS Vent Configurations 23
Figure 6: Processor Isometric Drawing (1 of 2) 24
Figure 7: Processor Isometric Drawing (2 of 2) 25
Figure 8: TLS 350 Face 26
Figure 9: Processor Run-Time Algorithm 31
Figure 10: Wiring the Motor Starter Relay Coil 36
Figure 11: ECS Piping Configuration 38
Figure 12: PMC Diagnostic Menu with PMC Software 39
Figure 13: PMC Diagnostic with ISD Software 40
Figure 14: Vacuum Pump: Single-Phase Motor Wiring Diagram 43
Figure 15: Vacuum Pump: Three-Phase Motor Wiring Diagram 44
Figure 16: Blower: Single-Phase Motor Wiring Diagram 45
Figure 17: Blower: Three-Phase Motor Wiring Diagram 46
Figure 19: HC Sentry Interface Module Front View: Power and ON/OFF Switch 48
Figure 20: HC Sentry Interface Module Back View: Power "ON" Light 49
Figure 21: Typical Leak Check Test Fixture 50
Figure 22: Blower electrical connection conduit 63
Figure 23: Blower inlet and outlet tubing connections and mounting bolts 63
Figure 24: Vacuum pump outlet tubing connection 66
Figure 25: Vacuum pump inlet tubing and fittings 66
Figure 26: Vacuum pump electrical connection / vacuum pump outlet tubing / HC sensor inlet tubing 67
Figure 27: Air outlet / vacuum pump outlet / HC sensor inlet tubing 67
Figure 28: Membrane Housing 68
Figure 29: Exposed membrane with top plate removed. 68
Figure 30: Membrane extraction tool 69
Figure 31: Membrane base insert 69
Figure 32: Vacuum pump with guard removed 71
Figure 33: Vacuum and motor assembly 71
Figure 34: Vacuum pump unbolted and moved away from the motor 72
Figure 35: Drive coupling rubber insert 73
Figure 36: Termination block inside the electrical junction box 76
Figure 37: Seam to cut to remove the insulation 76
Figure 38: End seal kit components 76
Figure 39: End seal kit installation instructions, page 1 of 2 77

Figure 40: End seal kit installation instructions, page 2 of 2 78
Figure 41: Prepare the new heat trace cable for installation into the end seal kit 79
Figure 42: Electrical junction box installation instructions, page 1 of 4 80
Figure 43: Electrical junction box installation instructions, page 2 of 4 81
Figure 44: Electrical junction box installation instructions, page 3 of 4 82
Figure 45: Electrical junction box installation instructions, page 4 of 4 83
Figure 46: End seal kit location and heat trace cable installation 84
Figure 47: Installed electrical junction box with electrical connections 85
Figure 48: HC IR Sensor Module and Electrical Housing Assembly 86
Figure 49: HC IR Sensor Module 1/4" 45º tubing and fittings 87
Figure 50: HC IR Sensor Electrical Housing Circuit Board 88
Figure 51: HC IR Sensor Electrical Housing Circuit Board Wiring Diagram 88
Figure 52: HC IR sensor installation orientation 89

About VST

Vapor Systems Technologies, Inc. began in 1989 with the vision of One Company – One Integrated Solution.

Today, that philosophy is still in place and getting stronger. Recognizing that a healthier environment is a need and not an option, VST has dedicated its undivided attention to the ever-changing, stringent regulations that govern fugitive vapors at gasoline dispensing facilities (GDF). To this challenge, VST is committed to a continual R&D campaign of developing the most current, technologically advanced solutions to service not only the United States, but also the world.

VST specializes in the development, engineering, and manufacturing of products that are sold into the GDF segment of the petroleum industry. The VST focus provides our customers and users with exceptional products, services, and innovative solutions for improving the fueling-station experience as well as the world's air quality.

VST's product offering includes curb pump and vapor recovery hoses, safety breakaways, nozzles, and emission-control system *Processor*s. The ENVIRO-LOC™ vapor-recovery product offering represents the most innovative concept in the industry for trapping fugitive vapors from the front end (vehicle refueling) to the back end (vent risers) of the GDF site.

Notice

Vapor Systems Technologies, Inc. shall not be liable for errors contained herein or for incidental or consequential damages in connection with the furnishing, performance, or use of this publication.

No part of this publication may be translated to another language without the prior written consent of Vapor Systems Technologies, Inc.

Warranty

- The warranty is conditional on whether the *Processor* was installed by a VST ASC Level B or a VST Level C.
- 12-month warranty becomes effective at the time of installation. If this card is not returned, the warranty becomes effective from the date of shipment at VST.
- VST cannot be held responsible for damage to the *Processor* or the *Processor* equipment (inclusive) due to acts of nature, vandalism, or neglect.
- Membranes exposed to gasoline (liquid) due to an overfill or any other reason voids the membrane warranty.
- VST products are warranted to be free of defects in material and workmanship.
- Liability under any expressed or implied warranty is limited to replacement of the product.
- Use of VST products on non-UL Listed systems, or use which falls outside intended field of use, voids any stated or implied warranty.
- VST is not responsible for misuse of, nor improperly installed, products.
- In the event of a warranty claim, the purchaser must obtain a copy of the Return Goods Authorization (RGA) prior to returning product to insure proper processing. Return shipping charges are the responsibility of the customer.
- Warranty status will be determined within 30 days of the return of suspected items.
- VST provides for a warranty program in conjunction with VST's exclusive serial number tracking system.
- Each VST product carries a unique serial number and warranty tracking card.
- Requests for warranty shall be through VST's Return Goods Authorization (RGA) procedure. Call VST at 937-704-9333.
- This warranty does not cover any components exposed to contact with fuels more than 5% menthanol, 10% ethanol, 15% MTBE by volume or any exposure to M85 / E85 fuel.

Warranty Cards

Vapor Systems Technologies, Inc.

Phone: (937)-704-9333 • Fax: (937)-704-9443
www.vsthose.com

IMPORTANT
PRODUCT WARRANTY
REGISTRATION CARD

12 MONTH WARRANTY BECOMES EFFECTIVE AT TIME OF INSTALLATION. IF THIS CARD IS NOT RETURNED, WARRANTY BECOMES EFFECTIVE FROM DATE OF SHIPMENT FROM VST.

THE MAXIMUM WARRANTY LIFE IS 18 MONTHS FROM DATE OF SHIPMENT.

PLEASE CALL VST IF THIS PRODUCT IS BEING USED AS A REPLACEMENT. REPLACEMENT WITH A NON VST PRODUCT VOIDS ANY WARRANTY.

SERIAL NUMBER:
INSTALLATION DATE:
INSTALLATION SITE:
CITY/STATE/ZIP:
DISTRIBUTOR NAME:
PRODUCT STYLE:
☐ HOSE ☐ SAFETY BREAKAWAY
☐ NOZZLE ☐ ECS PROCESSOR

Figure 1: VST Registration Card

NOTICE: THIS TAG MUST NOT BE REMOVED FOR ANY REASON

ECS MEMBRANE PROCESSOR UNIT

Serial Number: _____

Date Installed: _____

This device was factory tested and met all applicable performance standards and specifications to which it was certified.

Manufactured By: Vapor Systems Technologies, Inc.
650 Pleasant Valley Dr., Springboro, Ohio 45066
Phone: (937) 704-9333, Fax: (937) 704-9443

Figure 2: ECS Membrane Processor Sticker

Components and Warranties

PART #	DESCRIPTION	WARRANTY
5001-001	Vacuum Pump/Three-Phase Motor - Shipped with Three-Phase *Processor*	1 year
5001-002	Vacuum Pump/Single-Phase Motor - Shipped with Single-Phase *Processor*	1 year
5001-003	Vacuum Pump Drive Coupling Rubber Insert	1 year
5002-001	Circulating Blower / Three-Phase Motor - Shipped with Three-Phase *Processor*	1 year
5002-002	Circulating Blower / Single-Phase Motor - Shipped with Single-Phase *Processor*	1 year
5003-001	Check-Valve Assembly	1 year
5005-001	Membrane	1 year
5006-001	Membrane Housing, Complete	1 year
5006-011	O-Ring (2) Vertical Tube	1 year
5006-012	O-Ring (2) Base Insert	1 year
5006-013	O-Ring (2) Membrane	1 year
5007-004	Hydrocarbon Sensor	1 year
5008-001	Heat-Trace Cable	1 year
5008-002	Heat Trace Power Connection Kit	1 year
5008-003	Heat Trace End Seal Kit	1 year
5010-001	ECS Aluminum Cover	1 year
5012-100	Membrane Tubing	1 year
5012-101	Blower Inlet Tubing	1 year
5012-102	Blower Outlet Tubing	1 year
5012-103	Vacuum Pump Inlet Tubing	1 year
5012-104	Vacuum Pump Outlet Tubing	1 year
5012-105	HC Return Tubing	1 year
5012-106	HC Inlet Tubing	1 year
5012-107	Membrane Outlet Tubing	1 year
5013-001	Insulation	1 year
5015-001	HC Sentry Unit	1 year
5015-002	HC Sentry Interface Cable	1 year

Activating the Processor Warranty

Follow this process to activate the warranty on your *Processor.*

1. Make sure you have all the warranty paperwork. You should have:

   - ► A Warranty Card – See figure 1: 14-9.
   - ► A Post–Installation ChecklistA Post-Installation Power-Up Checklist.

2. Complete the Warranty Card

   - ► Completely fill out the card
   - ► Get the serial number of your *Processor* from the ECS Membrane Processor Sticker – See figure 2: 14-9.
   - ► Make a copy of the card for your files.
   - ► Place the completed, original card in an envelope for return mailing to VST.

3. Be sure the contractor who installs the *Processor* fills out the Post Installation Checklist.

   - ► Go over the form to be sure the contractor has filled it out completely and signed the form.
   - ► Make 2 copies of the form:
   - ▪ Original goes to VST.
   - ▪ One copy stays with the GDF.
   - ▪ One copy goes to the contractor.
   - ► Place the completed, original form in an envelope for return mailing to VST.
   - ► Give one copy to the contractor.
   - ► Place a copy in your files.

4. Be sure the contractor who performs the *Processor's* initial Power-Up fills out the Post-Installation Power-Up Checklist

   - ► Go over the form to be sure the contractor has filled it out completely and signed the form.
   - ► Make 2 copies of the form:
   - ▪ Original goes to VST.
   - ▪ One copy stays with the GDF.
   - ▪ One copy goes to the contractor.
   - ► Place the completed, original form in an envelope for return mailing to VST.
   - ► Give one copy to the contractor.
   - ► Place a copy in your files.

5. Seal the envelope and mail the three forms to VST:

   - ► The completed Warranty Card.
   - ► The completed and signed Post-Installation Checklist.
   - ► The completed and signed Post-Installation Power-Up Checklist.
   - ► The VST mailing address is:
     Vapor Systems Technologies, Inc.
     650 Pleasant Valley Drive
     Springboro, OH 45066

VST Contractor Requirements

Due to the highly volatile nature of gasoline and its handling and storage, VST requires the following certifications for its ASC's:

Level	Component	Authorized Tasks	Training Pre-Requisites
A Must be re-certified every two years	Hanging Hardware	Functional Testing Installation Maintenance Repair	No pre-requisite
A/B Must be re-certified every two years	Hanging Hardware	Functional Testing Installation Maintenance Repair	No pre-requisite
	Membrane *Processor*	Installation	Veeder-Root Level 1, 2/3, or 4 ASC certification
C Must be re-certified every two years	Membrane *Processor*	Annual Testing Component Replacement Maintenance Operation Post-Installation Power-Up Testing Start-Up Testing Troubleshooting	VST Level "A/B" Veeder-Root UST Monitoring Systems Level 2/3 or 4 Veeder-Root ASC w/VST PMC/ISD certification
NOTE: Depending on local codes, in addition to the VST and Veeder-Root training, contractors may be required to take air-district training or ICC certification as an approved vapor-recovery installer.			

- ASC's must be able to show proof of certification if asked. Carry the wallet card or have a copy of your certification on file with the GDF.
- The ASC must record his or her certification number on the applicable paperwork for all warranties to be deemed valid.
- Contractors should ALWAYS verify the training and certification requirements with the air-district staff BEFORE beginning installation of EVR systems.

Veeder-Root Contractor Requirements

Veeder-Root Level 1	Contractors holding valid Level 1 Certification are approved to perform wiring and conduit routing, equipment mounting, probe and sensor installation, tank and line preparation, and line leak detector installation.
Veeder-Root Level 2/3 or 4	Contractors holding valid Level 2, 3, or 4 certifications are approved to perform installation checkout, startup, programming and operations training, troubleshooting and servicing for all Veeder-Root Tank Monitoring Systems, including Line Leak Detection and associated accessories.
PMC / ISD	This course of training includes In-Stations Diagnostics/Pressure Management Control (ISD/PMC) installation checkout, startup, programming, and operations training. It also includes troubleshooting and service techniques for the Veeder-Root In-Station Diagnostics system. A current level 2/3 or 4 certification is a prerequisite for the ISD/PMC course. After successful completion of this course the contractor will receive a certificate as well as a Veeder-Root ISD/PMC contractor certification card.
Warranty Registrations may only be submitted by selected distributors.	

Safety Icons

	ELECTRICITY A potential shock hazard exists. High voltage is supplied to and exists in this device.		TURN POWER OFF Turn power off to the device and its accessories when installing and servicing the unit. Live power creates a potential spark hazard.
	EXPLOSIVE Gasoline and its vapors are extremely explosive if ignited.	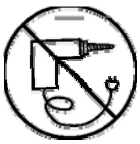	NO POWER TOOLS Sparks from electric power tools can ignite gasoline and its vapors.
	FLAMMABLE Gasoline and its vapors are extremely flammable.		NO PEOPLE IN THE AREA Unauthorized people in the work area during installation and service of the device create a potential for personal injury.
	NO SMOKING Gasoline and its vapors can be ignited by sparks and embers of burning cigarettes.		READ ALL RELATED MATERIALS Read, understand, and follow all instructions, warnings, and requirements before you begin work.
	NO OPEN FLAMES Open flames from sources like lighters and matches can ignite gasoline and its vapors.		USE SAFETY BARRICADES Unauthorized people in the work area during installation and service of the device create a potential for personal injury. Therefore, always isolate your work area by using safety cones, barricades, etc.
	PINCH RISK Stay clear. Keeps hands and tools away from rotating machinery and moving parts.		ROTATING MACHINERY Stay clear. Keep hands and tools away from rotating machinery.

Table of Terms & Abbreviations

ASC:	Authorized Service Contractor
AQMD:	Air Quality Management Districts
ATG:	Automatic Tank Gauge
CARB:	California Air Resources Board
CDFA:	California Department of Food & Agriculture
CVLD:	Continuous Vapor Leakage Detection, another name for Vapor Leak Detection
ECS:	Emissions Control System
EO:	Executive Order
EVR:	Enhanced Vapor Recovery
GDF:	Gasoline Dispensing Facility
HC:	Hydrocarbon
HC IR:	Hydrocarbon Infrared
ISD:	In-Station Diagnostics
MAG Probe:	A type (brand) of Tank Inventory Probe
NEC:	National Electric Code
NFPA:	National Fire Protection Association
ORVR:	On-Board Refueling Vapor Recovery
OSHA:	Occupational Safety Health Administration
Permeate:	Air return to atmosphere
PLC:	Programmable Logic Control
PMC:	Pressure Management Control
Retentate:	Vapor return to UST
RVP:	Reid Vapor Pressure
TLS:	Tank Level System
TLS Console:	Veeder-Root's line of environmental monitoring consoles.
TS:	Troubleshooting
Ullage:	Vapor space above liquid in a UST
UST:	Underground Storage Tank
VCK:	Vapor Collection Kit
Veeder Root:	Manufacturer of the TLS-350
VOC:	Volatile Organic Compounds
VST:	Vapor Systems Technologies, Inc. - manufacturer of the ECS Membrane *Processor*
WC:	Water Column

1 ECS Membrane Processor Overview

1.1 ECS Membrane Processor Theory of Operation

- The VST ECS membrane *Processor* does not interact directly with the other balance system hardware. It is in place to monitor and control the pressure in the UST to within limits specified by CARB.

  Under conditions where the GDF is operational and the balance system hardware is functioning normally, the inherent ORVR compatibility of the balance system (when using VST's ENVIRO-LOC nozzle) will produce a predominately negative gauge pressure in the ullage space of the UST. Under these conditions the ECS membrane *Processor* will typically not need to operate.

  During periods of less activity, the GDF being shut down overnight, winter fuels being present, or other conditions that promote the pressurization of the ullage space, the ECS membrane *Processor* will operate as needed to control the pressure in the ullage space to an accepted level. The ECS membrane *Processor* will turn on at an ullage pressure of +0.20 inches of water and turn it off at a pressure of –0.20 inches of water. Currently, the ECS membrane *Processor* unit is monitored and controlled through the PMC or ISD software.

- The ECS membrane *Processor* uses a type of membrane technology to enable it to selectively separate the components in the ullage vapor mixture.

  Through a somewhat complex transport means, certain molecules will selectively travel in a stream from one side of the membrane to the other. This stream is referred to as the permeate stream.

  In this case, predominate molecules transported across the membrane will be the primary constituents of air, which are oxygen, nitrogen, and water vapor. A small amount of the hydrocarbons present in the ullage mixture will also migrate across the membrane. Typically, permeate will contain less than 3.0% hydrocarbons. The result of this activity includes, fresh air vented to atmosphere, hydrocarbon vapors returned to the UST, and UST pressurization controlled to an acceptable level.

- The process of separation by the membrane is made possible by using two pumps, one low-pressure pump which circulates the ullage vapor mixture along one side of the membrane, and one high-vacuum pump, which creates the pressure differential needed to cause the permeate transport across the membrane. These are the only moving parts in the system.

1.2 Overview of How the Processor Operates

- The Processor is a technology created for Gasoline Dispensing Facilities (GDF) to assist them in reducing the number of harmful emissions released to the atmosphere through the natural occurrence of gasoline vaporization.

- The table below lists the steps that the Veeder-Root TLS 350 and the software takes to control the Processor.

1.	• When the UST system pressure rises above +0.2"WC, the *Processor* turns ON.
2.	• Through the vapor inlet pipe connection at the *Processor*, the VOC vapor is drawn into the suction side of the blower.
3.	• The blower discharges the VOC vapor into the membrane housing.
4.	• Inside the membrane housing, the VOC vapor is separated in to two air streams: ► VOC depleted air (referred to as "air") ► Gasoline VOC vapor • The membrane is designed specifically for separating air from gasoline VOC vapor.
5.	• A vacuum pump draws the air from the membrane housing through a check valve.
6.	• A sample of the air flows through a hydrocarbon sensor to check the percent hydrocarbons.
7.	• From the vacuum pump, the air is vented to atmosphere via the air return.
8.	• The gasoline VOC vapor returns to the UST system via the vapor return.
9.	• When the UST system pressure drops below -0.2"WC, the *Processor* turns OFF.

1.3 Processor Dimensions and Weight

Part Number	Unit	Dimensions	Weight
VST-ECS-CS3-110	Single-Phase	L-39" x W-27" x H-43" Height includes 18" legs	385 lbs. Includes 24-lb. cover
VST-ECS-CS3-310	Three-Phase	L-39" x W-27" x H-43" Height includes 18" legs	350 lbs. Includes 24-lb. cover

1.4 Processor Components and Their Purpose

PART #	DESCRIPTION	PURPOSE
5001-001	Vacuum Pump / Three-Phase Motor Shipped with Three-Phase *Processor*	Draws air through the membrane housing to the atmosphere.
5001-002	Vacuum Pump / Single-Phase Motor Shipped with Single-Phase *Processor*	
5001-003	Vacuum Pump Drive Coupling Rubber Insert	Drive coupling rubber insert.
5002-001	Circulating Blower / Three-Phase Motor Shipped with Three-Phase *Processor*	The blower circulates the vapor from the UST system through the separation membrane located inside the *Processor* back to the UST system.
5002-002	Circulating Blower / Single-Phase Motor Shipped with Single-Phase *Processor*	
5003-001	Check-Valve Assembly	Eliminates outside air from entering the UST's.
5005-001	Membrane	By means of the circulating blower, the vapor from the UST system continuously flows through the membrane housing, which holds the membrane cartridge. This happens only while the *Processor* is running. The membrane cartridge separates the air from the VOC inlet vapor, returning a concentrated VOC stream back into the storage tank while the air is vented to the atmosphere. The membrane and housing use UL approved o-rings.
5006-001	Membrane Housing, Complete	Houses the membrane cartridge.
5006-011	O-Ring (2) Vertical Tube	Prevents hydrocarbons from leaking into the atmosphere.
5006-012	O-Ring (2) Base Insert	Prevents the separated air from mixing with concentrated hydrocarbons.
5006-013	O-Ring (2) Membrane	
5007-004	Hydrocarbon Sensor	The HC Sensor continuously monitors the amount of hydrocarbons in the air stream being vented to the atmosphere. This happens only while the *Processor* is running. A 4-20mA signal is sent to the TLS-350 controller that monitors the hydrocarbon percentage by volume. 24VDC power is required and is supplied from the HC sentry.

PART #	DESCRIPTION	PURPOSE
5008-001	Heat-Trace Cable	A self-regulating heat trace cable wraps around the membrane housing and is designed to keep the membrane housing temperature between 100°-150° F. Power is continuously applied to the heat-trace cable 100% of the time whether the *Processor* is running or not. The power requirements are 115 VAC at 130 watts per foot, with a maximum of 2 amps draw. On the end of the heat-trace cable is an end-seal kit to terminate the cable.
5008-002	Heat Trace Power Connection Kit	Connection for 115V power.
5008-003	Heat Trace End Seal Kit	End circuit connection.
5010-001	ECS Aluminum Cover	Protective Cover
5012-100	Membrane Tubing	Internal Vapor Tubing
5012-101	Blower Inlet Tubing	
5012-102	Blower Outlet Tubing	
5012-103	Vacuum Pump Inlet Tubing	
5012-104	Vacuum Pump Outlet Tubing	
5012-105	HC Return Tubing	
5012-106	HC Inlet Tubing	
5012-107	Membrane Outlet Tubing	
5013-001	Insulation	1” thick insulation encases the membrane housing and the heat trace cable to preventing unnecessary heat loss.

1.5 Processor Auxiliary Components

PART #	COMPONENT	DESCRIPTION
5015-001	HC Sentry Interface Module w/24VDC power supply	The HC Sentry module acts as an interface between the TLS and the HC sensor. 115v power is supplied to the HC sentry module, which supplies 24VDC power to the HC sensor. A 4-20 mA signal is sent from the HC sensor to the HC sentry module, which converts the signal to a proprietary code for the TLS-350.
5015-002	HC Sentry Interface Cable	Connects the HC Sentry to the TLS-350.

1.6 Processor Manuals

Manual #	Manual Name	Section
9520-001	ECS Membrane Processor with PMC/ISD: Installation Manual	IOM-14
9520-002	ECS Membrane Processor with PMC/ISD: OM&S	IOM-15
9514-003	ECS Membrane Processor with PMC/ISD: Troubleshooting Guide	www.vsthose.com
9514-004	ECS Membrane Processor with PMC/ISD: Pre-Installation Site Survey	www.vsthose.com

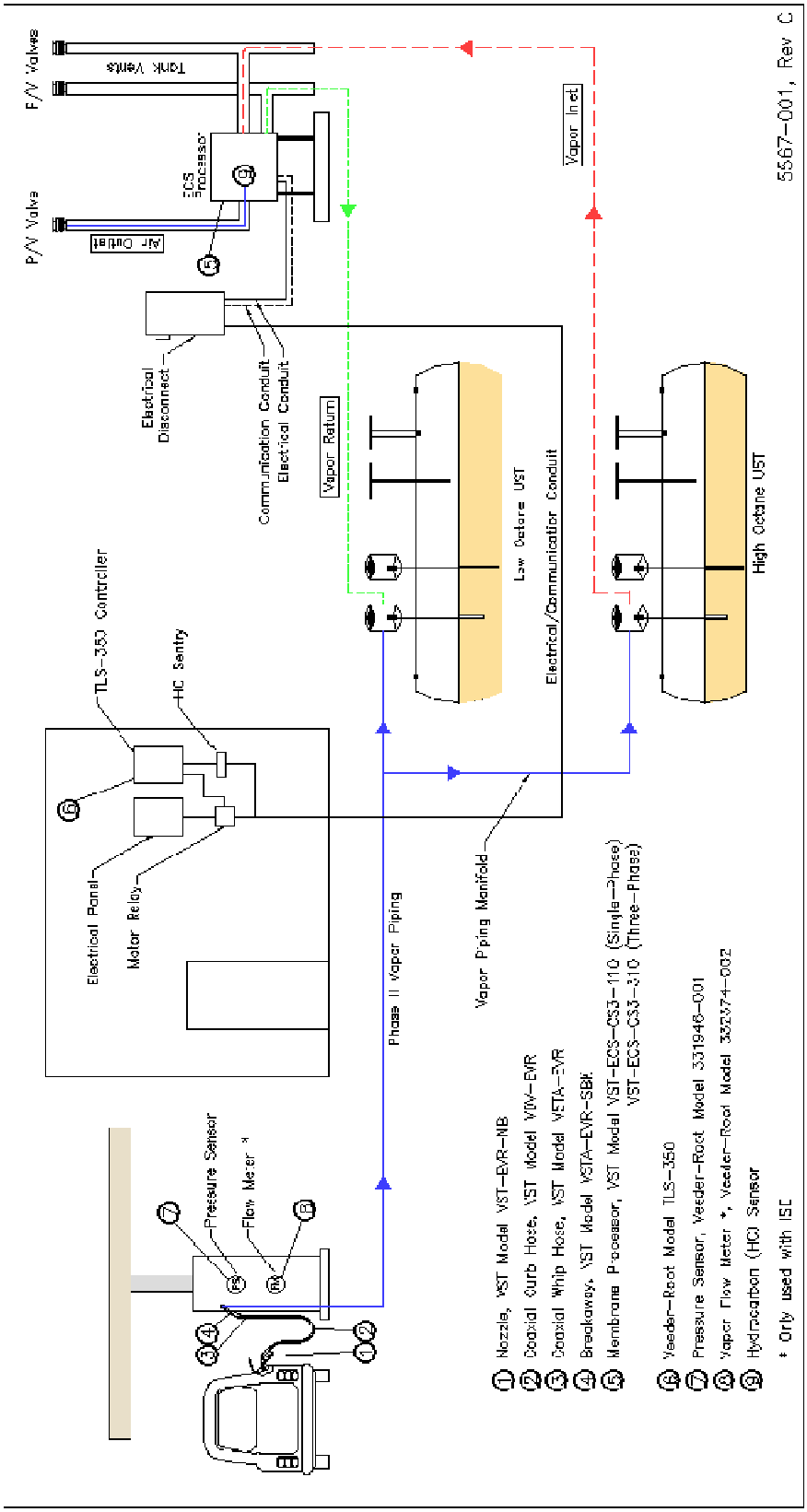

Figure 3: How the Processor fits into the GDF layout

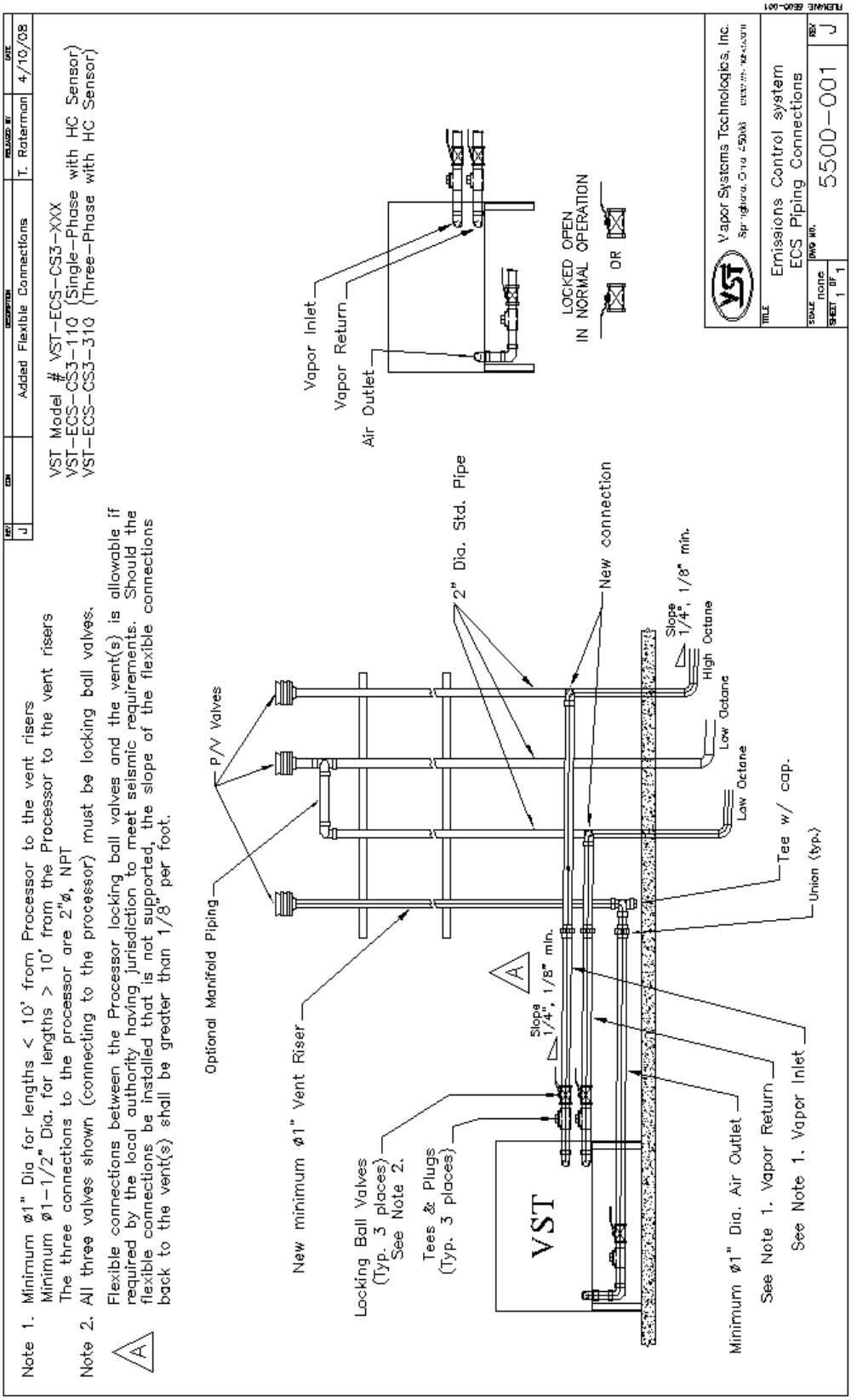

Figure 4: Processor Piping Diagram

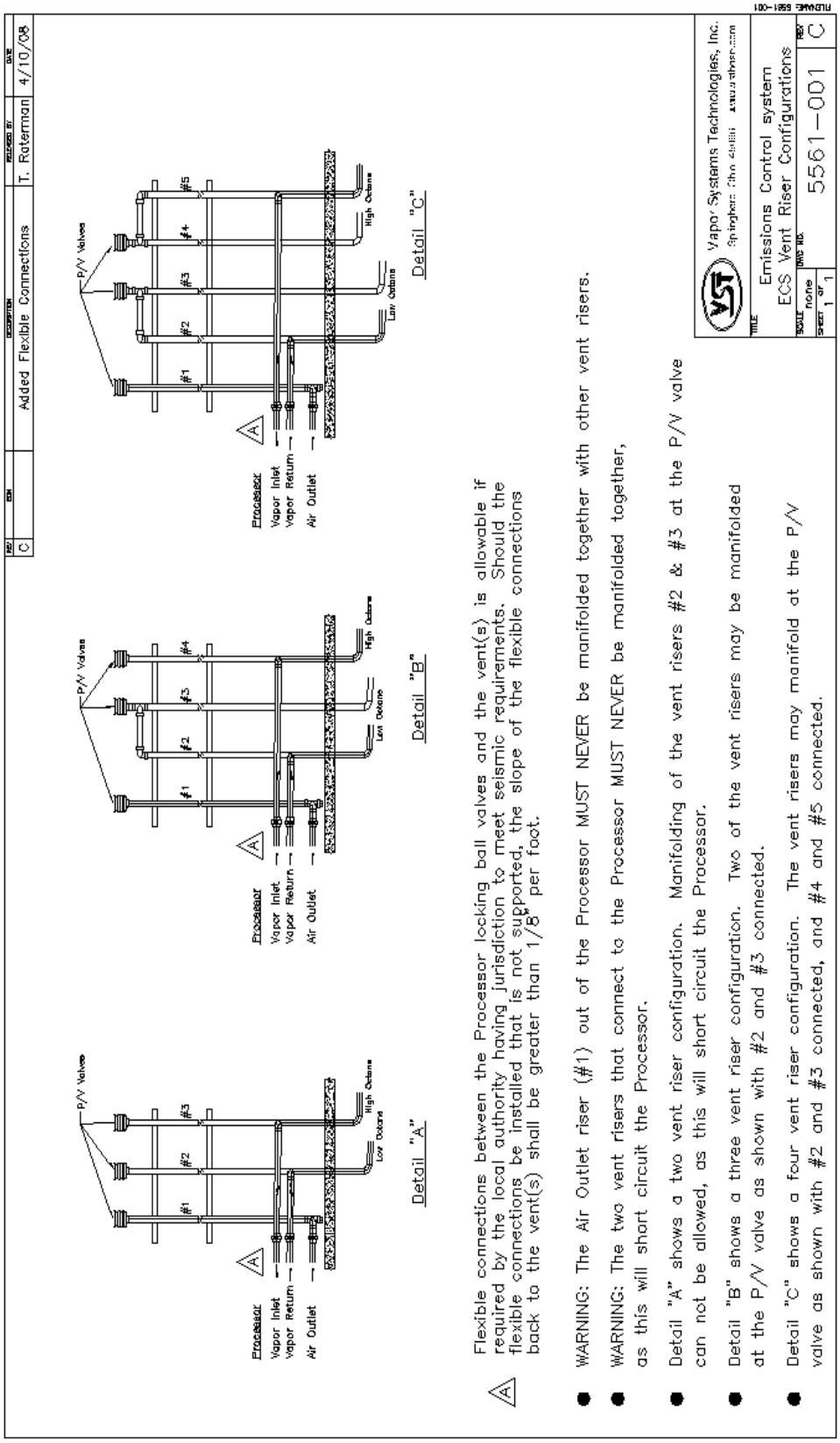

Figure 5: ECS Vent Configurations

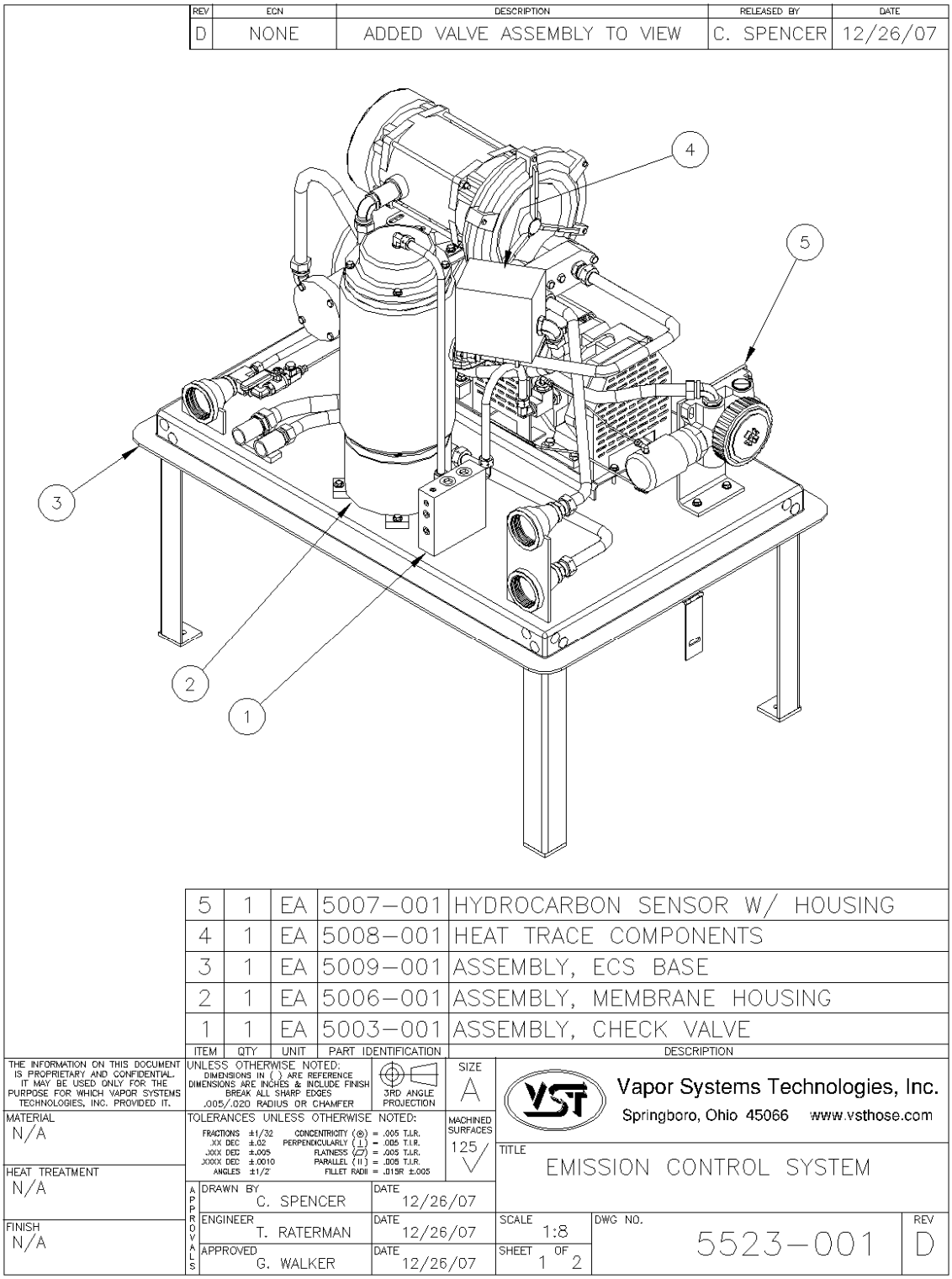

Figure 6: Processor Isometric Drawing (1 of 2)

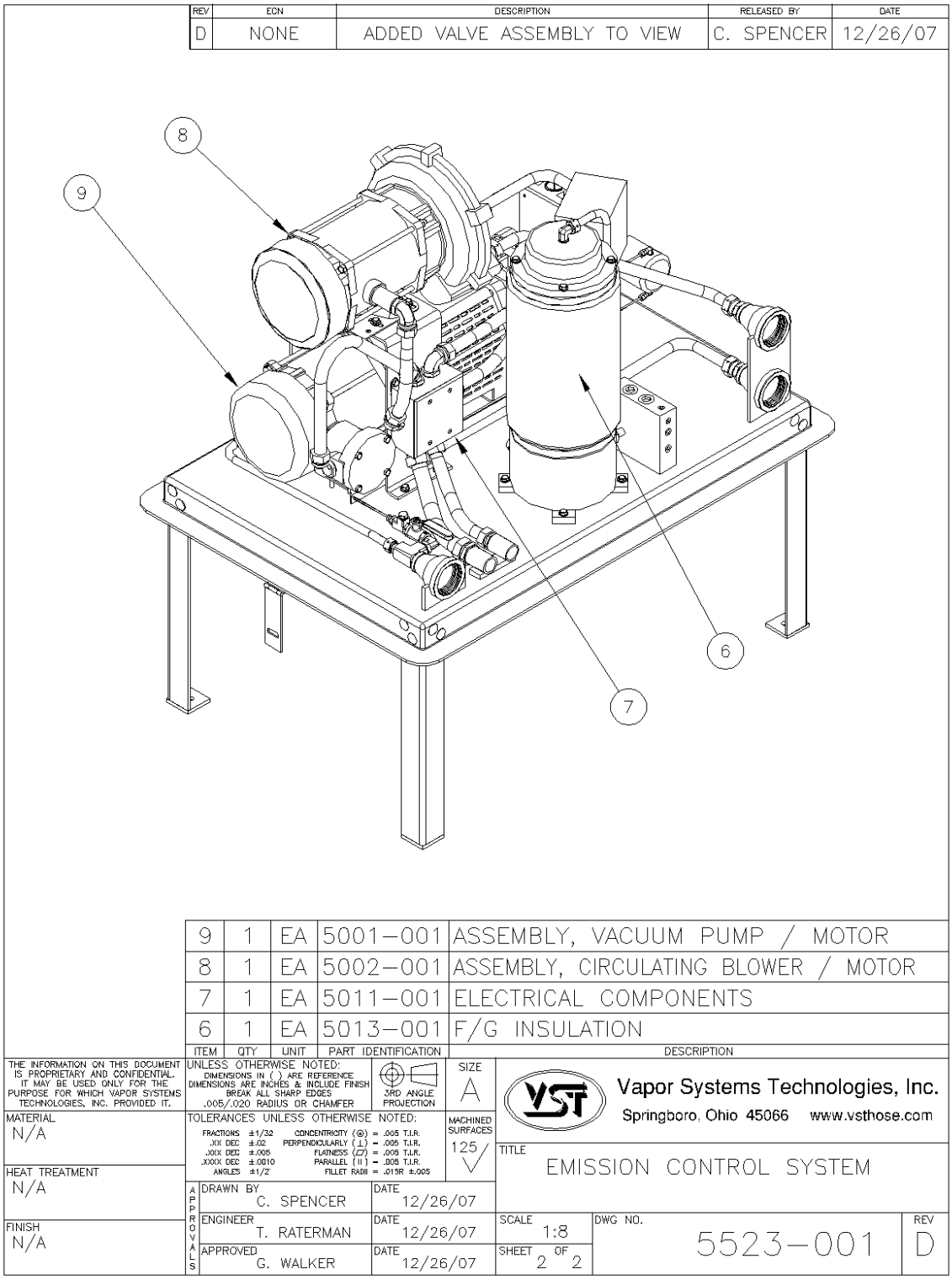

Figure 7: Processor Isometric Drawing (2 of 2)

2 *Processor* Operation

- The Veeder-Root Pressure software controls the *Processor* and is located within the TLS-350 console. The TLS-350 is an automatic tank gauging, compliance, and fuel-management system.

- The TLS-350 will be configured for either PMC or ISD control software.

- Warnings and alarms are announced through the various lights on the panel as well as through a paper print-out.

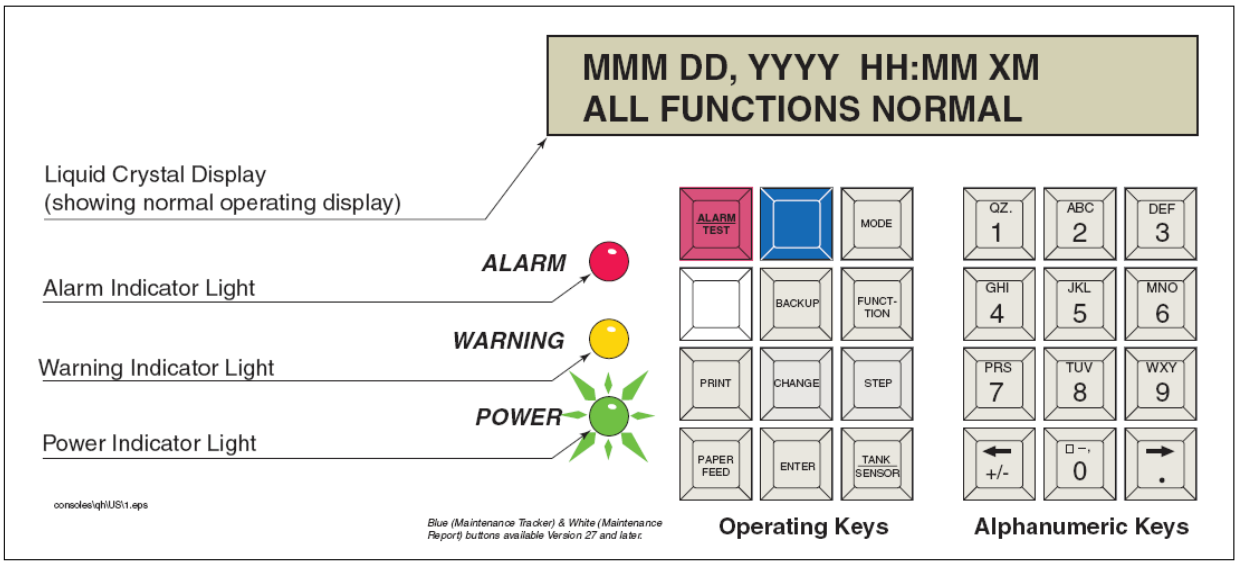

Figure 8: TLS-350 Face

2.1 TLS 350 Construction

- The *TLS Console* is constructed with fuel compatible materials and is approved for use in GDF's by UL (Underwriters Laboratories, Inc.) where wetted components and materials are tested for durability and resistance to corrosion.

- The *TLS Console* is designed to withstand power outages by storing critical system parameters in nonvolatile memory.

- The pressure sensor (supplied by Veeder-Root) is installed inside a dispenser.

2.2 Automatic Control

- Under automatic control, vapor pressure readings are compared to the programmed ON/OFF thresholds to determine the appropriate *Processor* state.

  - ► When the *Processor* is OFF and the UST pressure equals or exceeds the programmed ON vapor pressure threshold, the *Processor* is turned ON and remains so until the pressure equals or is less than the programmed OFF vapor pressure threshold.

  - ► During periods when there are no deliveries, if the *Processor* is ON continuously for longer than the programmed max 30 minutes runtime, the *Processor* is turned OFF.

  - ► It will remain OFF for the same number of minutes programmed as max runtime minutes before turning back ON.

  - ► It will continue to cycle on and off until the vapor pressure drops below the low/off threshold limit.

- During a delivery, if the *Processor* ON time exceeds the maximum run time, the *Processor* will be shut OFF.

  - ► After 3 seconds the *Processor* will be turned back ON if the pressure is above the high pressure threshold limit.

  - ► This cycle will continue until the delivery has ended or the pressure goes below the low pressure threshold and the *Processor* is turned OFF.

2.3 Manual Control of the Processor

- From the PMC diagnostic menu, the *Processor* mode can be changed from Automatic to Manual.

- When the *Processor* control mode is Manual, the diagnostic menu allows the *Processor* to be directly turned ON and OFF.

  ► This feature is to support the testing functionality of the *Processor* or compliance testing without needing the pressure to be at operational set points.
  ► This is especially useful if the vapor space has been disturbed through the course of repair or testing.

- The current vapor pressure threshold settings are available through the diagnostic menu.

- Note: If the *Processor* is ON and the control mode is Automatic, changing the control mode to Manual mode will turn the *Processor* OFF.

- This feature is to support testing functionality of the *Processor* without needing the pressure to be at operational set-points.

- This function is also to be used for conducting testing or at any time compliant-testing involves opening of the vapor space.

- The current vapor pressure reading will also be available through the diagnostic menu.

> At the conclusion of any testing or repairs, verify that the *Processor* has been set to "AUTOMATIC mode" at the TLS-350.

2.4 TLS Alarms

- During normal operation when the system is functioning properly and no warning or alarm conditions exist, the "ALL FUNCTIONS NORMAL" message will appear in the system status (bottom) line of the console display.

- If a warning or alarm condition occurs, the system displays the condition type and its location.

- If more than one warning or alarm condition exists, the display will alternately flash the appropriate messages.

- The system automatically prints an alarm report showing the warning or alarm type, its location, and the date and time the warning or alarm condition occurred.

- Warning and alarm posting causes the TLS 350 to activate:
  - ► Warning lights
  - ► Failure-Alarm indicator lights
  - ► Audible alarm
  - ► Automatic strip paper printout documenting the warning or alarm

2.5 Thresholds and Algorithms

- Two thresholds (high and low pressure) are used to activate and deactivate the *Processor* internal TLS-350 relay.

- Three thresholds can be set via the TLS keypad or serial RS232 commands. These thresholds include:

  - ► Vapor *Processor* **LOW PRESSURE THRESHOLD** set at -0.2" WC
    - ▪ Maximum negative UST pressure required in order to turn OFF the *Processor*

  - ► Vapor *Processor* **HIGH PRESSURE THRESHOLD** set at +0.2" WC
    - ▪ Minimum positive UST pressure required in order to turn ON the *Processor*

  - ► Vapor *Processor* runtime set at 30 minutes
    - ▪ Maximum allowable runtime

- The TLS 350 control algorithm checks the current UST pressure level and turns the *Processor* **ON** and **OFF** according to the high and low pressure thresholds.

- All WARNINGS and ALARMS should be resolved and then followed by CLEAR TEST AFTER REPAIR (found in the TLS menu) regardless of PMC and ISD software.

- The Veeder-Root Pressure Sensor (VRPS) reads every 20 seconds, and this reading is compared to the vapor-pressure thresholds to determine the *Processor* state, which will be either **ON** or **OFF**.

- DUE TO THE SAMPLE RATE OF 20 SECONDS, SOME DELAY OCCURS IN POSTING. THE ACTUAL VALUES DISPLAYED ON THE TLS MAY BE SLIGHTLY HIGHER THAN THE +.2"wc AND SLIGHTLY LOWER THAN THE -.2"WC SET POINTS.

- When the *Processor* is **OFF** and the high-vapor pressure threshold (+0.2"WC) is exceeded, the relay is enabled (which starts the *Processor*), and the relay remains enabled until the pressure drops below the low-vapor pressure (-0.2"WC) threshold.

- Automatic control is the default mode.

- The internal relay must be programmed as a **VST VAPOR *PROCESSOR*** (VP) through the TLS 350 relay setup menu.

- The *Processor* control algorithm will not be engaged until at least one relay of this type is detected by the TLS 350.

- Whenever the *Processor* runs more than 30 minutes,
  (whether you're using PMC or ISD software) the *Processor* is *automatically* turned OFF.
  - ► During this 30-minute period, the *Processor* will not be controlled by UST pressure and will remain OFF for 30 minutes.

- The *Processor* will then restart assuming the UST pressure is still above the lower threshold setting and the TLS is in the automatic controlled mode.

- Figure 9: Page 15-31 shows the *Processor Run*-Time Algorithm.

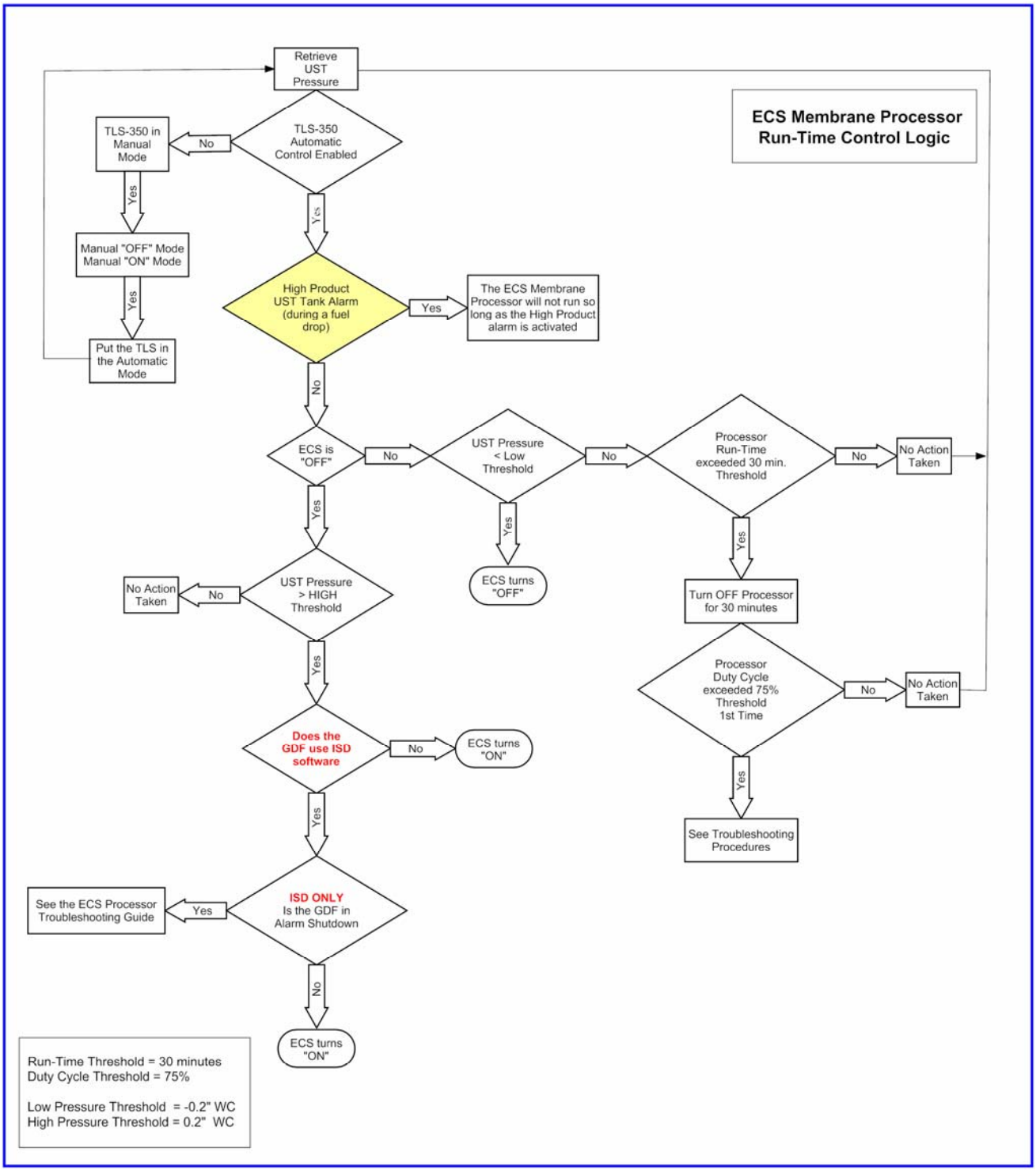

Figure 9: Processor Run-Time Algorithm

2.5.1 TLS-350 (PMC): Alarm Troubleshooting Summary

PMC Alarm Troubleshooting Summary				
Message	PMC Category	Light	Cause	Suggested Troubleshooting
VP EMISSION WARN	Processor	Yellow	Mass emission exceeded the certified threshold.	• Troubleshooting Guide found out www.vsthose.com. • Exhibit 6 • Exhibit 9 • VST ASC Level C
VP EMISSION FAIL	Processor	Red	2nd Consecutive Mass emission test failure.	
ISD VP PRESSURE WARN	Processor	Yellow	90th percentile of 1 day ullage pressure exceeds 1 IWC.	• Troubleshooting Guide www.vsthose.com. • Exhibit 8 • Exhibit 9 • VST ASC Level C
ISD VP PRESSURE FAIL2	Processor	Red	2nd Consecutive Failure of Vapor Processor Overpressure Test	
VP DUTY CYCLE WARN	Processor	Yellow	Duty cycle exceeds 18 hours per day 0r 75% of 24 hours.	• Troubleshooting Guide www.vsthose.com. • TLS 350 PMC Setup Procedure • Exhibit 8 • Exhibit 9 • Exhibit 4 • VST ASC Level C
VP DUTY CYCLE FAIL	Processor	Red	2nd Consecutive Duty Cycle Test Failure.	
NOTE: All exhibits can be found in Executive Orders VR-203 and VR-204. VR-203 is for those systems using PMC. VR-204 is for those systems using ISD.				

2.5.2 TLS-350 (ISD): Alarm Troubleshooting Summary

ISD Alarm Troubleshooting Summary				
Message	ISD Category	Light	Cause	Suggested Troubleshooting[1]
ISD VAPOR LEAKAGE WARN	Containment	Yellow	Containment system leaks at 2 times the TP-201.3 standard.	• Troubleshooting Guide found at www.vsthose.com • Exhibit 4 • VST ASC Level C
ISD VAPOR LEAKAGE FAIL[2]	Containment	Red	8th Consecutive Failure of Pressure Integrity (Vapor Leak) Test	
ISD GROSS PRESSURE WARN	Containment	Yellow	95th percentile of 7-days' ullage pressure exceeds 1.3 IWC.	• Troubleshooting Guide found at www.vsthose.com • Exhibit 8 • Exhibit 9 • VST ASC Level C
ISD GROSS PRESSURE FAIL[2]	Containment	Red	8th Consecutive Failure of Gross Containment Pressure Test	
ISD DEGRD PRESSURE WARN	Containment	Yellow	75th percentile of 30-days' ullage pressure exceeds 0.3 IWC.	
ISD DEGRD PRESSURE FAIL[2]	Containment	Red	31st Consecutive Failure of Degradation Pressure Test	
hnn[3]: FLOW COLLECT WARN	Collection	Yellow	Vapor collection flow performance is less than 50%.	• Troubleshooting Guide found at www.vsthose.com. Exhibit 11 • VST ASC Level C
hnn[3]: FLOW COLLECT FAIL[2]	Collection	Red	2nd Consecutive Failure of Vapor Collection Flow Performance Monitoring Test	
ISD VP* STATUS WARN	Processor	Yellow	Failure of Vapor Processor Effluent Emissions or Duty Cycle test.	• Troubleshooting Guide found at www.vsthose.com. • VP Emission Test • VP Duty Cycle Test • VST ASC Level C
ISD VP STATUS FAIL[2]	Processor	Red	2nd Consecutive Failure of Vapor Processor Status test.	
ISD VP PRESSURE WARN	Processor	Yellow	90th percentile of 1 day ullage pressure exceeds 1 IWC.	• Troubleshooting Guide found at www.vsthose.com. • Exhibit 8 • Exhibit 9 • VST ASC Level C
ISD VP PRESSURE FAIL[2]	Processor	Red	2nd Consecutive Failure of Vapor Processor Overpressure Test	

[1]See ISD Troubleshooting Manual P/N 577013-819 and the VST ISD Troubleshooting Guide 9513-003 found at www.vsthose.com for a complete list of suggestions.
[2]ISD Site shut down alarms [3]Hose Number *VP = Vapor Processor

ISD Alarm Troubleshooting Summary				
Message	ISD Category	Light	Cause	Suggested Troubleshooting[1]
VP EMISSION WARN	Processor	Yellow	Mass emission exceeded the certified threshold.	• Troubleshooting Guide found at www.vsthose.com. • Exhibit 6 • Exhibit 9 • VST ASC Level C
VP EMISSION FAIL	Processor	Red	2nd Consecutive Mass emission test failure.	
VP DUTY CYCLE WARN	Processor	Yellow	Duty cycle exceeds 18 hours per day 0r 75% of 24 hours.	• Troubleshooting Guide found at www.vsthose.com. • PMC Setup Procedure • Exhibit 8 • Exhibit 9 • Exhibit 4 • VST ASC Level C
VP DUTY CYCLE FAIL	Processor	Red	2nd Consecutive Duty Cycle Test Failure.	
ISD SENSOR OUT WARN	Self-Test	Yellow	Failure of Sensor Self-Test	• Confirm ISD sensor & module installation / communication per VR 204 IOM Section 16, Chapter 2 • VST ASC Level C
ISD SENSOR OUT FAIL	Self-Test	Red	8th Consecutive Failure of Sensor Self-Test	
ISD SETUP WARN	Self-Test	Yellow	Failure of Setup Test	• Confirm EVR/ISD programming per VR 204 IOM Section 16 • VST ASC Level C
ISD SETUP FAIL[2]	Self-Test	Red	8th Consecutive Failure of Setup Test	

[1]See ISD Troubleshooting Manual P/N 577013-819 and the VST ISD Troubleshooting Guide 9513-003 found at www.vsthose.com for a complete list of suggestions.
[2]ISD Site shut down alarms *VP=Vapor Processor

NOTE: All exhibits can be found in Executive Orders VR-203 and VR-204.
VR-203 is for those systems using PMC. VR-204 is for those systems using ISD.

3 Post-Installation Power-Up Tests

During post-installation testing, the *Processor* will use outside air, not gasoline vapor from the USTs to conduct these tests.

- Close the 3 valves located on the inlet and the outlets of the *Processor.*
- Remove the plugs on the 3 tees located on the inlet and the outlets of the *Processor.*

3.1 Post-Installation Electrical Connections

- Prior to starting the *Processor*, the Motor Starter Relay Coil must be wired to the TLS-350 4-Relay Module. The *Processor* cannot start until this connection is made.

<u>CAUTION: Make sure the TLS-350 is in the Manual OFF Mode prior to installing the wires. Make sure the power to the motors is OFF at the electrical panel</u>.

- Install two 18-gauge wires that connect the Motor Starter Relay Coil to the TLS-350 4-Relay Module.
- See Figure 10: Page 15-36 for connections to the TLS-350.
- Leaving the TLS-350 in the Manual OFF Mode, the power to the motors can be turned ON at the electrical panel.
- After the connection has been made, proceed to the Post-Installation Power-Up Tests.
- See Section 3.2: Page 15-37.

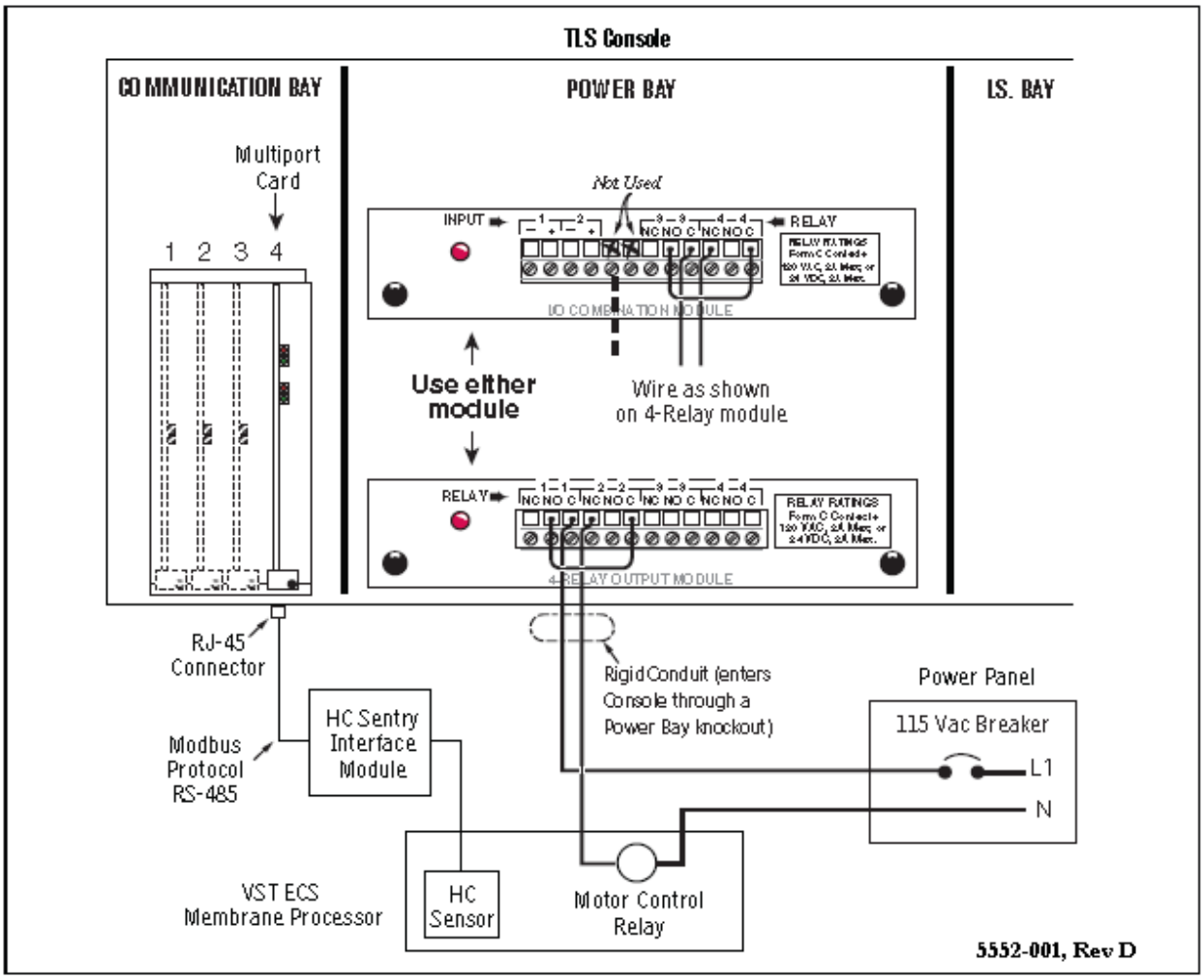

Figure 10: Wiring the Motor Starter Relay Coil

3.2 Required Post-Installation Power-Up Tests

- These tests are used for the Post-Installation Power-Up and Troubleshooting Test.

- Once you have properly prepared the Processor for testing, conduct tests 1 through 4 found in the table below.

	Test	Page
1.	Electrical Connection Check	15-41
2.	Motor Rotation Test	15-41
3.	Heat-Trace Continuity Test	15-47
4.	HC Sensor & HC Sentry 24 Power Test	15-48

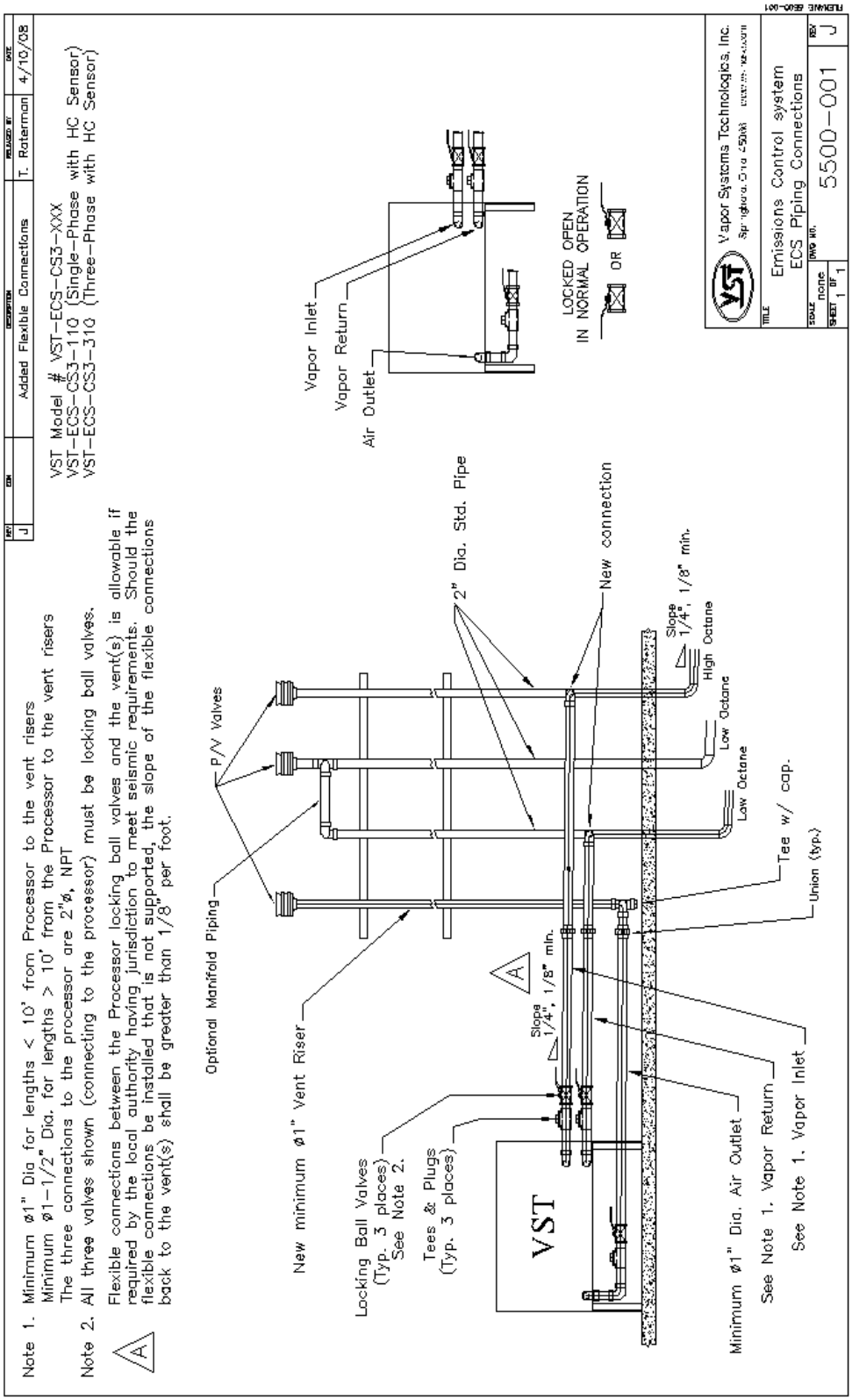

Figure 11: ECS Piping Configuration

3.3 TLS Manual Mode

- Follow the steps at the TLS console to put theTLS-350 in the Manual "OFF" Mode, as shown in Figure 12: Page 15-39 for the PMC Diagnostic Menu and Figure 13: Page 15-40 for the ISD Diagnostic Menu.

- After the post-installation power-up tests are complete, put the *Processor* in the Manual "OFF" position.

- ALWAYS BE SURE TO REFER TO THE MOST RECENT VEEDER-ROOT PMC MANUAL (Manual #577013-801).

PMC Diagnostic Menu with PMC Software (taken from Manual #577013-801 Rev. B)

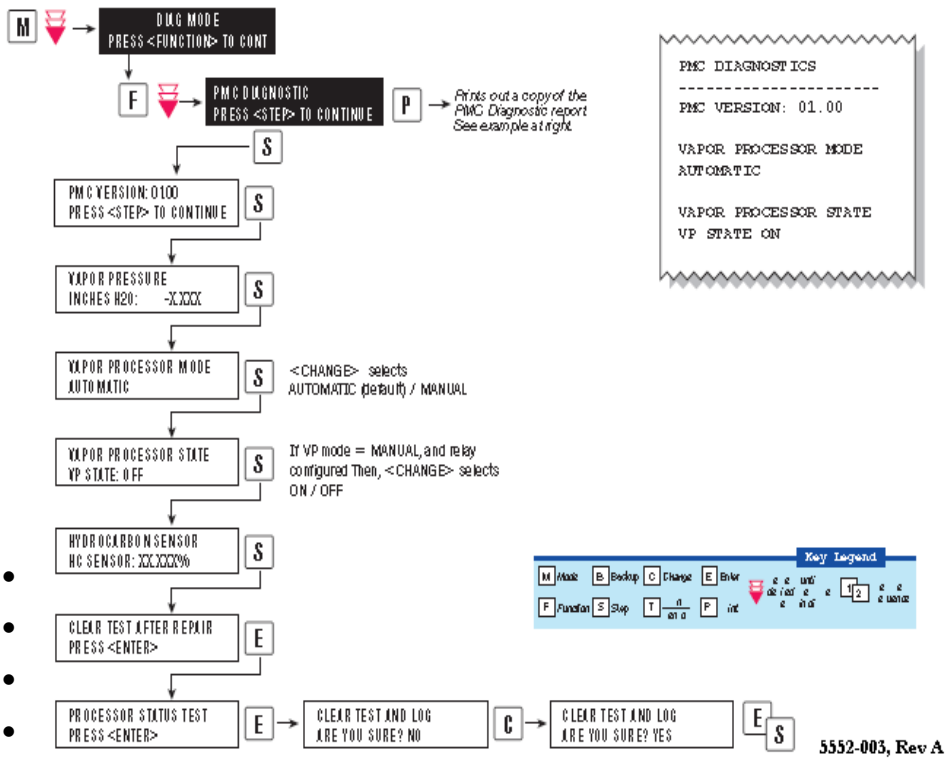

Figure 12: PMC Diagnostic Menu with PMC Software

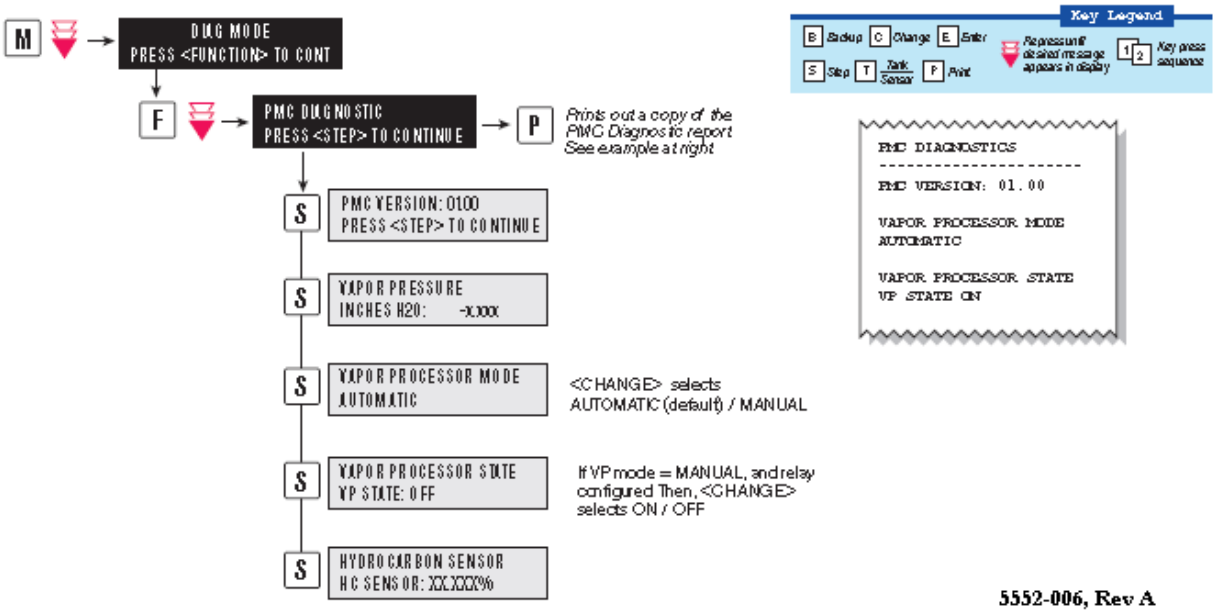

Figure 13: PMC Diagnostic with ISD Software

3.4 Electrical Connection Test

- Put the TLS-350 in the Manual OFF as shown in the Diagnostic Menus (see Figure 12: Page 15-39 or Figure 13: Page 15-40).

- Check all electrical and control connections prior to applying power to the *Processor*.

- Make sure that all connections have been made to the proper terminals and that all connections are tight.
  - ► In the electrical room:
    - HC Sentry 24VDC (output) / 115V power
    - Fused disconnects
    - Panel breaker wiring connections
    - Starter
    - TLS 4-relay module
    - HC Sentry Interface Cable
  - ► At the ECS:
    - Blower motor
    - Vacuum pump motor
    - Heat trace cable
    - HC sensor
    - All equipment grounds

CAUTION

Always obtain approval from the local authority having jurisdiction.

Installation of the *Processor* must comply with (if applicable):

- CARB CP-201
- VST EVR E.O.
- Fire Marshall
- Water Board
- Local Air Pollution District
- ICC
- NEC
- NFPA 30 and 30A
- UL
- Any other applicable federal, state, and local codes

3.5 Motor-Rotation Test

- The purpose of this test is to insure that the motors are rotating in the correct direction.

- Turn the power OFF at the disconnect switch located near the Processor.

- Put the *Processor* in the manual ON Mode at the TLS as shown in the diagnostic menu in see Figure 12: Page 15-39 or Figure 13: Page 15-40.

  - ► Remove the cover from the *Processor*.

- Bump the power (briefly energize) the power at the disconnect switch.

  - ► Visually check the motor rotation for the vacuum pump and blower motors to be sure they are rotating according to the arrows that are shown on the equipment.

  - ► The rotation of the motors can be visually checked by looking at the rotation of the fan located on the end of each motor.

CAUTION: DO NOT RUN THE PUMP(S) FOR ANY EXTENDED PERIOD OF TIME UNTIL THE PROPER ROTATION IS VERIFIED OR YOU COULD CAUSE SERIOUS DAMAGE.

Motor Rotation Test, continued . . .

- If the motors are rotating in the proper direction, put the TLS in the manual OFF mode.
- If either of the motors are not rotating in the correct direction:
  - ► Put the *Processor* in the manual "OFF" Mode at the TLS.
  - ► Follow safety regulations regarding lock-out / tag-out procedures to insure power cannot be turned on to the Processor.
- Three-Phase Motors:
  - ► At the motor junction box at the ECS *Processor*, switch any two of the three power circuits for the motor that is not rotating in the correct direction.
  - ► See Figure 16: Page 15-45 and Figure 17: Page 15-46.
- Single-Phase Motors:
  - ► Check the wiring connection diagrams for the specific motor that is not rotating in the correct rotation and correct as required.
  - ► See Figure 14: Page 15-43 and Figure 15: Page 15-44.
- Remove the lock from the lock-out and apply power to the *Processor*.
- Return the *Processor* to the manual ON Mode at the TLS-350.
- Bump the power (briefly energize) power at the disconnect switch.
- Re-check the equipment for proper rotation.
- Return the *Processor* to the manual OFF mode at the TLS.

If either motor will not run, refer to the ECS Troubleshooting Guide found on the VST website at: www.vsthose.com.

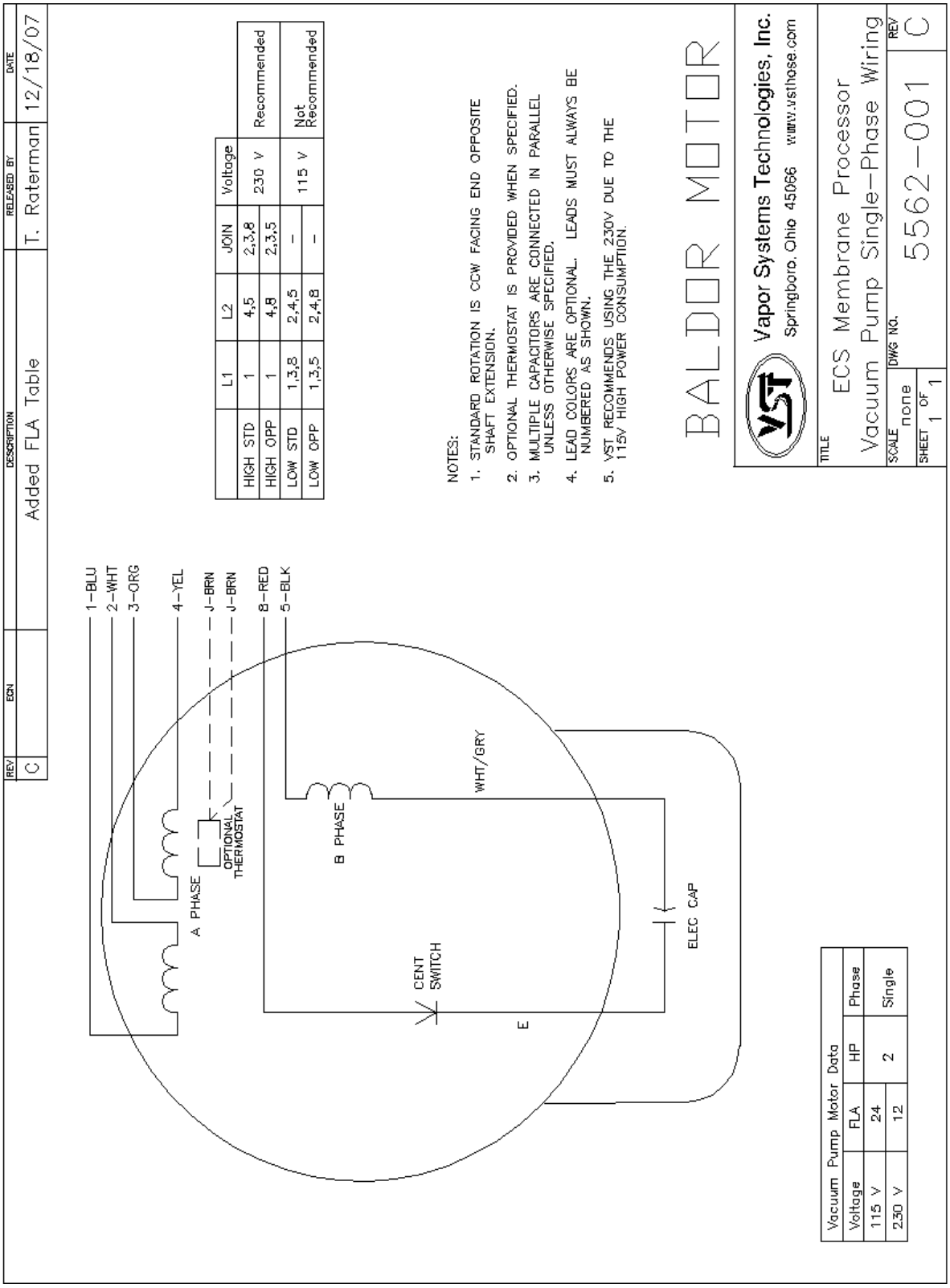

	L1	L2	JOIN	Voltage	
HIGH STD	1	4,5	2,3,8	230 V	Recommended
HIGH OPP	1	4,8	2,3,5		
LOW STD	1,3,8	2,4,5	–	115 V	Not Recommended
LOW OPP	1,3,5	2,4,8	–		

Vacuum Pump Motor Data			
Voltage	FLA	HP	Phase
115 V	24	2	Single
230 V	12		

Figure 14: Vacuum Pump: Single-Phase Motor Wiring Diagram

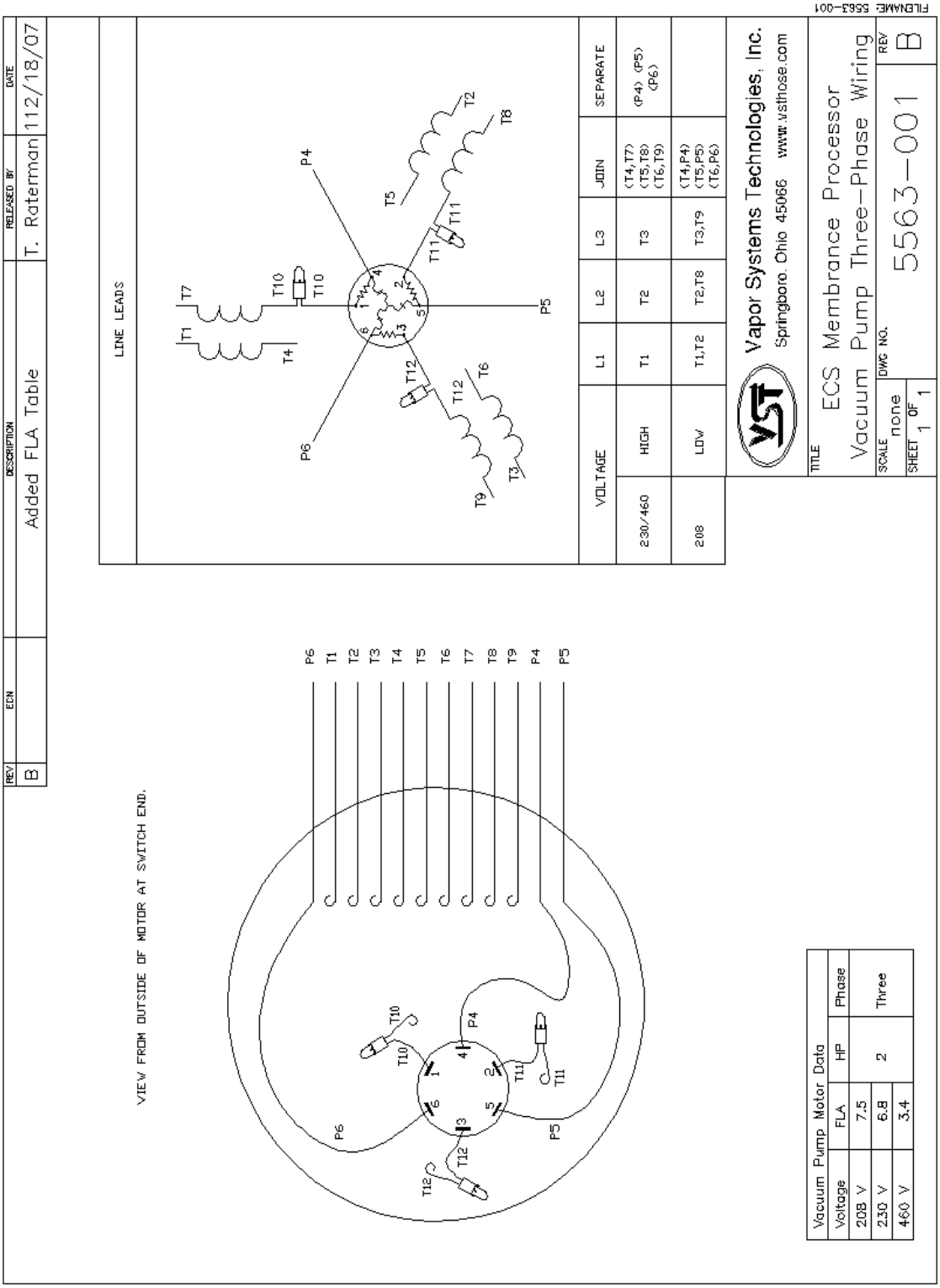

Figure 15: Vacuum Pump: Three-Phase Motor Wiring Diagram

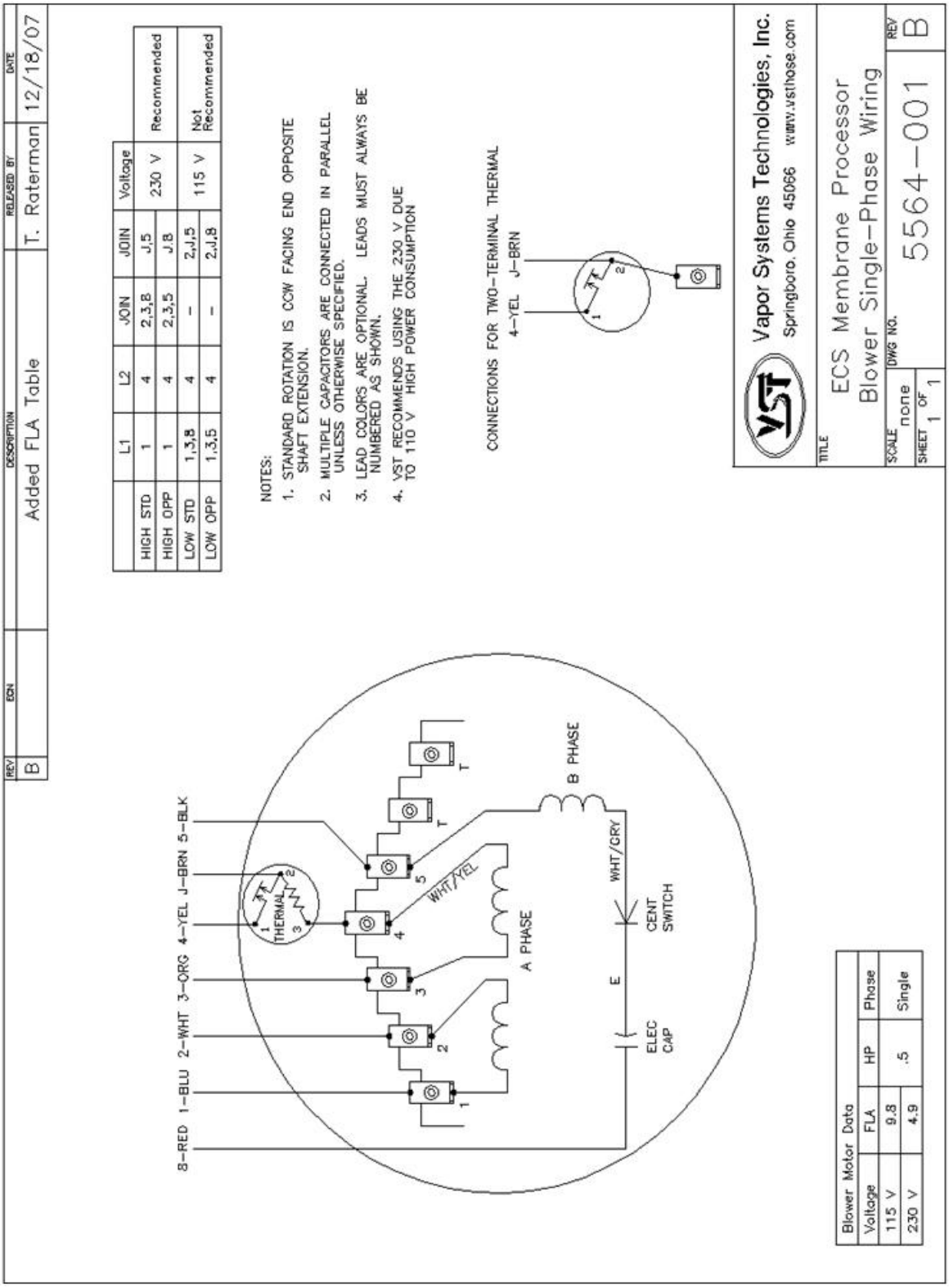

Figure 16: Blower: Single-Phase Motor Wiring Diagram

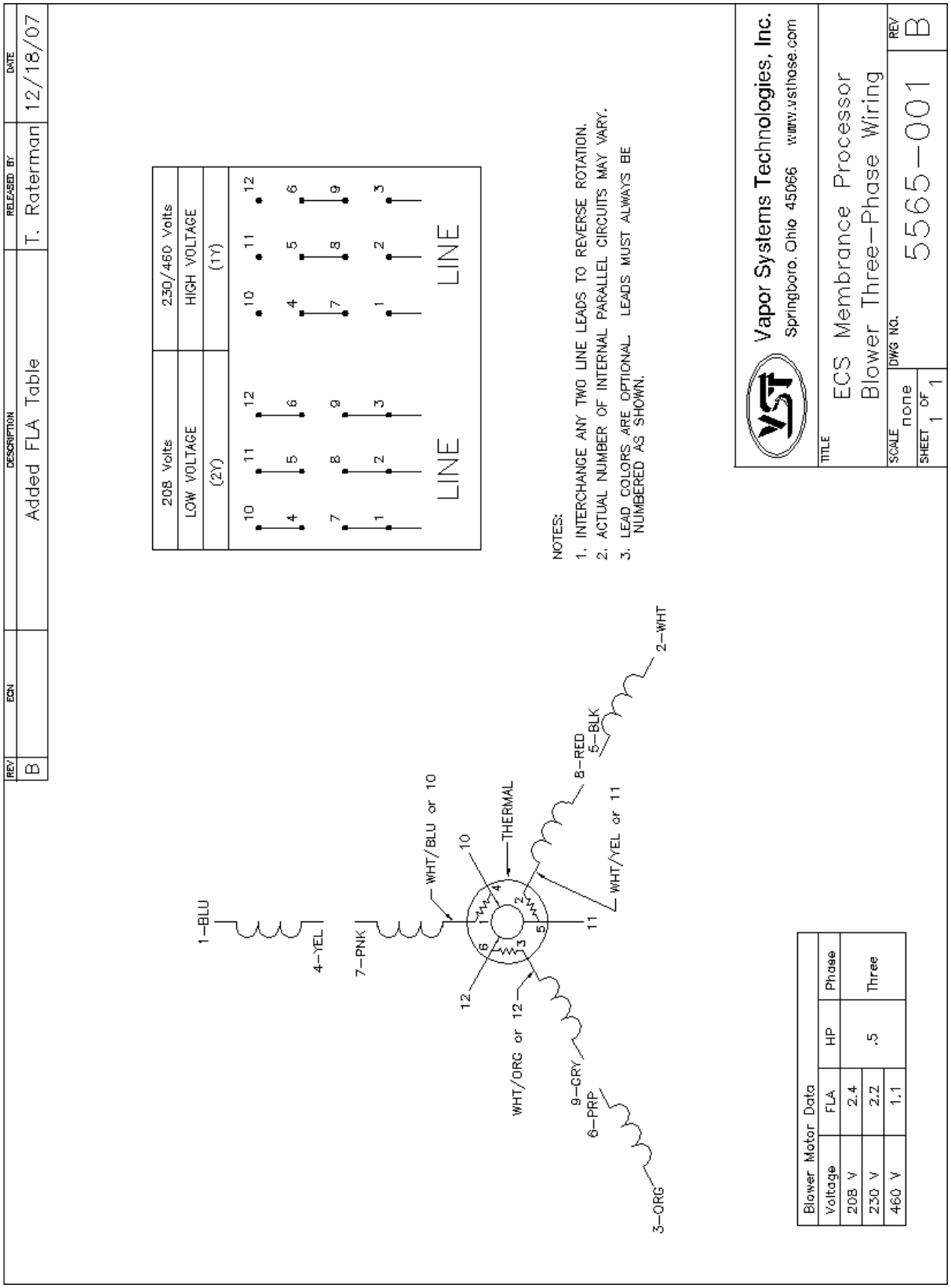

Figure 17: Blower: Three-Phase Motor Wiring Diagram

3.6 Heat-Trace Continuity Test

The purpose of the Heat Trace Continuity test is to insure there is not a short or damage to the Heat Trace cable. The self-regulating heating cable provides safe and reliable heat tracing for process temperature maintenance.

In electronics, a continuity test is the checking of an electric circuit to see if current flows (that it is in fact a complete circuit). A continuity test is performed by placing a small voltage (wired in series with an LED) across the chosen path. If the electron flow is inhibited by broken conductors, damaged components, or excessive resistance, the circuit is "open." Devices that can be used to perform continuity tests include multimeters or specialized continuity testers.

3.6.1 Preparing the heat trace electrical junction box for the test:

- CAUTION: Be sure to use Lockout/Tag-Out procedures when performing work on the *Processor* or while working on electrical components.

1. Put the *Processor* in the manual OFF mode at the TLS-350.
2. Trip the heat trace cable 115v circuit breaker in the electrical panel to remove the power from the heat trace cable.
3. Remove the cover to the *Processor*.
4. Remove the heat trace electrical junction box cover by removing the 4 hold-down screws and lifting the molded plastic cover off the base.

3.6.2 Testing the heat trace circuit

1. Using a multimeter or continuity tester, check the continuity (current flow) across the heat trace circuit as shown in Figure 18: Page 15-47.
2. Verify the circuit is complete between the positive terminal the neutral at the three-position terminal block.
3. If the red light does not come on, the heat trace circuit is open. (If electron flow is inhibited by broken conductors, damaged components, or excessive resistance, the circuit is “open.):
    a) Check that all wiring connections are correct.
    b) Repair/replace the heat trace cable as required to correct the problem.
4. Replace the cover on the heat trace electrical junction box using the 4-hold down screws.
5. Replace the cover on the Processor.
6. The Processor can now be put back in the Automatic Mode at the TLS-350 provided all work is completed.

Figure 18: Heat Trace Circuit Test

3.7 HC Sensor and HC Sentry Power Test

- The purpose of this test is to insure there is 24VDC power to the HC sensor and the HC Sentry module.

3.7.1 Checking 24 VDC Power to the HC Sensor

- The 24VDC power to the HC sensor is from the HC Sentry Module.
- Using the multimeter, check the + to Gnd connection on the HC Sentry.
- If there is no 24VDC power, check power to the HC Sentry module.
- If the unit does not function properly,
  see the ECS Troubleshooting Guide
  found on the VST website at www.vsthose.com.

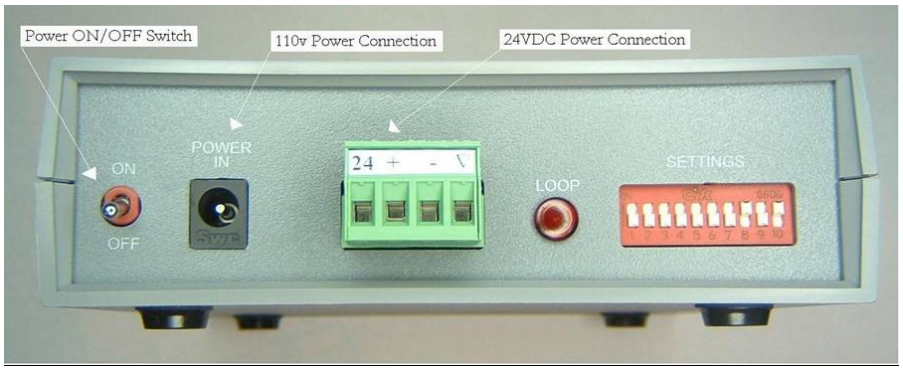

Figure 19: HC Sentry Interface Module Front View: Power and ON/OFF Switch

3.7.2 Checking 24VDC Power to the HC Sentry Module

- The HC Sentry is powered from a 115V outlet and uses a 115v/24VDC power converter, which is VST supplied.
- Check that the unit is ON.
- Check that the Power Light is ON.
- If the power light is not ON when the unit is ON:
  - ► Check to make sure there is 115v power to the outlet.
  - ► Check the ON switch on the HC Sentry module.
  - ► Check that the 115v/24VDC power converter is functioning.
  - ► If the unit does not function properly, see the ECS Troubleshooting Guide at www.vsthose.com.

Figure 20: HC Sentry Interface Module Back View: Power "ON" Light

3.8 Processor Leak Test

- The purpose of this test is to check the *Processor* fittings for leakage after the tubing has been disrupted for *Processor* repair.
- Conduct this test with the TLS-350 in the Manual "OFF" Mode, as shown in Figure 12: Page 15-39 or Figure 13: Page 15-40.
- Turn OFF power to the *Processor* motors.
- Make sure the three valves at the *Processor* are closed.
  - ► All tubing fittings are a special UL approved flare-fitting and designed for gasoline- vapor applications.For a leak-proof connection, these fittings are made to be repeatedly disassembled and reassembled.

3.8.1 Tools needed to conduct the Processor Leak Test:

- See Figure 21: Page 15-50.
- There are three 2" NPT pipe connections on the *Processor*.
- Install the 2" NPT plug with the Leak Test Fixture attached to the empty 2" pipe connection at the *Processor*.
- Attach the compressed nitrogen to the test fixture.

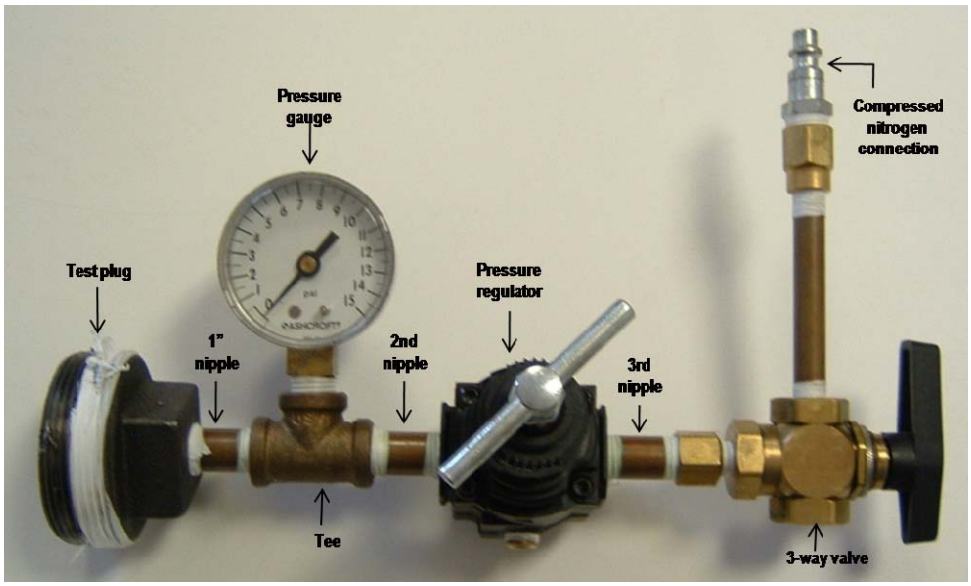

Figure 21: Typical Leak Check Test Fixture

3.8.2 Conducting the Leak Test

- The Leak Check is conducted with 1.0 to 2.0 PSI using compressed nitrogen.
- Slowly pressurize the *Processor* to a maximum of 2.0 PSI compressed nitrogen.

CAUTION: DO NOT EXCEED 5.0 PSI. DAMAGE TO THE *PROCESSOR* O-RINGS AND/OR PUMP SEALS MAY RESULT, WHICH WILL VOID ALL WARRANTIES ON THE *PROCESSOR*.

- With the *Processor* pressurized to 1.0 to 2.0 PSI using compressed nitrogen, spray a soapy solution on each fitting to check for bubbles:
  - ► If bubbles do not appear, the connection is tight.
  - ► If bubbles do appear, tighten the leaking fitting 1/8" turn and re-check for leaks.
- If the fitting cannot be tightened so the connection is leak free, replace the 45 ° flare tube assembly that is leaking with a new tube assembly.
- Continue this process until all the internal tube fittings have been checked and found leak free.
- Remove the compressed nitrogen connection to the *Processor*.
- Once this test is complete, remove the 2" NPT plugs and the Leak Test Fixture previously installed.
- Remove the remaining two 2" plugs previously installed under this test procedure.
- Keep the TLS-350 in the Manual OFF Mode.
- Turn ON the power to the motors at the electrical panel.

3.9 Preparing the Processor for Field Operation

3.9.1 Setting the TLS-350 Threshold Values

- Although the threshold values are in the Veeder-Root posting reports, the Veeder-Root PMC and ISD manuals do not address changing the initial "Default" values to match the defaults that are prescribed in VST Executive Orders VR-203 and VR-204.

- In the PMC Set Up menu verify / set the TLS-350 to the following values:

IN THE PMC SET UP MENU	Software	Description	Default	Threshold Values
	PMC / ISD	Vapor Processor Max. Run-Time	60 minutes	30 minutes
	PMC / ISD	Over Pressure Limit	0.0"WC	1.0"WC
	PMC / ISD	Analysis time	0.0	11:59 PM.
	PMC / ISD	Turn off vapor processor threshold	-0.2"WC	NO CHANGE
	PMC / ISD	Turn on vapor processor threshold	+0.2"WC	NO CHANGE
	PMC Only	Duty cycle limit	75%	NO CHANGE
	PMC / ISD	All the other associated threshold values are pre-set from the factory.		

- <u>CAUTION: These values MUST be set prior to putting the TLS-350 into the AUTOMATIC MODE</u>.

3.9.2 Processor Configuration Prior to Start Up

- After all the post-installation power-up tests are complete:
- Replace the plugs on the 3 tees located on the inlet and the outlet of the *Processor* and tighten.
- Lock in the open position the 3 valves located on the inlet and the outlet of the *Processor.*
- Leave the *Processor* in the manual "OFF" mode at the TLS 350.
- See Figure 12: Page 15-39 or Figure 13: Page 15-40.
- Complete the Post-Installation Power-Up checklist form (found on the next page of this document).

3.10 Post-Installation Power-Up Checklist

Post-Installation Power-Up Checklist Form					Attach product sticker with bar code here
VST-ASC #:	Date:				
ASC Name:					
VST-ASC Certification Level	❑ A ❑ B ❑ C				
ASC Company:					
GDF Name:					
Address:					
City:		State:	Zip Code:		
GDF Contact Person Name:					
GDF Contact Person Title:					
GDF Contact Person Phone:		E-mail:			

Notes: Use this form to note details of the note details of the power-up process

Checkpoints ECS *Processor* Components	Passed	Failed	Repaired	Replaced	Action Items if Required
All electrical connections checked	❑	❑	❑	❑	
Blower motor rotation checked	❑	❑	❑	❑	
Vacuum pump motor rotation checked	❑	❑	❑	❑	
Heat-trace continuity checked	❑	❑	❑	❑	
HC sentry power checked	❑	❑	❑	❑	
HC sensor power checked	❑	❑	❑	❑	
Set threshold values	❑	❑	❑	❑	

The above post-installation power-up tests were performed in accordance with IOM found in the VST's Executive Orders.

ASC Signature

4 Processor Start-Up

- Use the following start-up procedure:

  ► When initially starting the *Processor* or

  ► When re-starting the *Processor* following maintenance or testing.

	START-UP PROCEDURE
1.	• Make sure the plugs are installed on the 3 tees at the *Processor*.
2.	• Make sure all 3 valves are locked in the OPEN position at the *Processor*.
3.	• Make sure power is on to the: ▪ Heat-trace cable ▪ HC sentry ▪ HC sensor ▪ ECS vacuum pump ▪ ECS recirculation blower
4.	• Make sure the pressure sensor is operational.
5.	• Make sure that the GDF is vapor tight. (TP 201.3 and Exhibit 4)
6.	• After the TLS is installed and configured and all EVR equipment has been installed, the *Processor* can become operational. • Put the TLS in the **AUTOMATIC MODE**. • If the pressure is above +0.2" WC, the *Processor* will start and the auxiliary relays will close. • If the pressure is below +0.2" WC, the *Processor* will not start because the UST system-pressure is below the high-pressure threshold.
NOTE: All exhibits can be found in Executive Orders VR-203 and VR-204. VR-203 is for those systems using PMC. VR-204 is for those systems using ISD.	

CAUTION:

Locking ball valve handles at the *Processor* inlet and outlet must <u>not</u> be removed.

4.1 Processor Shut-Down Procedure

CAUTION: POWER TO THE HC SENSOR AND THE HEAT TRACE CABLE MUST BE TURNED OFF INDIVIDUALLY FROM DIFFERENT POWER SOURCES. THEY DO NOT RECEIVE THEIR POWER FROM THE SAME SOURCE AS THE MOTORS.

4.1.1 Processor Shut-Down Procedure

- The *Processor* must be SHUT DOWN for all testing and maintenance.
- The only exception is for the "Determination of VST Processor Activation Pressure Test."
- To turn the *Processor* OFF:
  a) Through the front panel of the TLC console, access the PMC menu.
  b) Select *Processor* MANUAL mode.
  c) Verify that the status is OFF.
  d) Remove power to the *Processor* by either turning OFF the breaker or by disconnecting power at the *Processor*.
- To return the *Processor* to the AUTOMATIC mode:
  a) Through the front panel of the TLS console, access the PMC menu.
  a) Select *Processor* AUTOMATIC mode.
  b) Turn the power ON to the *Processor*.

4.1.2 HC Sensor and HC Sentry Module

- The 115VAC/24 VDC power supply for the HC Sentry Module / HC sensor can be unplugged, which will remove power to the HC Sensor in the *Processor*.

4.1.3 Heat-Trace Cable

- The heat trace cable should not be turned OFF unless maintenance is performed in an area that could cause electrical shock.
- Turn OFF power to the heat-trace cable from the 115v electrical-panel breaker.

5 Processor Maintenance

- The VST Emissions Control System consists of only two components having moving parts: a blower and a vacuum pump, which do not have any scheduled maintenance for 10 years.

- The remaining components are tested, but they require maintenance only if they fail their tests:
  - ► Heat trace cable
  - ► HC sensor
  - ► HC Sentry module

- Because the system continually monitors itself and notifies you of any problems or situations, it requires very little attention.

- The table on the following page outlines the required annual inspections and tests.
  - ► Preventative Maintenance Checklist Form
  - ► GDF Maintenance Records

5.1 Annual System Compliance Testing

Annual System Compliance Testing	
Static Pressure Test:	TP-201.3 Exhibit 4
Dynamic Back Pressure Test:	TP-201.4
Liquid Removal Test Procedure:	Exhibit 5
Hydrocarbon Sensor Verification Test:	Exhibit 6
Vapor Pressure Sensor Verification Test:	Exhibit 8
VST *Processor* Activation Test:	Exhibit 9
Nozzle Bag Test Procedure:	Exhibit 10
ISD Operability Test: (Flow Meter Operability Test)	Exhibit 11
NOTE: All exhibits can be found in Executive Orders VR-203 and VR-204. VR-203 is for those systems using PMC. VR-204 is for those systems using ISD.	

5.2 Annual Inspections and Replacements

Annual *Processor* Inspections and Replacements					
Component	Procedure	Fail Criteria	Corrective Action	Reference Manuals	Authorized Personnel
Blower	Replace the blower every ten years or 15,000 hrs. (whichever comes first).			IOM – 15 Found in Executive Orders VR-203 and VR-204	VST ASC Level C
Vacuum pump	Replace blower every ten years or 15,000 hrs. (whichever comes first).				
Vacuum pump drive coupling - rubber insert	Visually inspect the drive coupling between the vacuum pump and the motor for wear	Rubber debris is found on or around the vacuum-pump base.	Replace the drive coupling rubber insert	IOM – 15 Found in Executive Orders VR-203 and VR-204	
Heat Trace Cable	Check the continuity of the heat trace cable.	If the heat trace cable circuit is open, the cable has failed.	Replace the heat- trace cable	IOM – 15 Found in Executive Orders VR-203 and VR-204	
HC Sensor	Test the HC sensor	The difference shall be within ±1.0% HC concentration from the calibration gas concentration. Record “Pass” if within ±1.0% or “Fail” if not within ±1.0%.	Replace the HC Sensor	IOM – 15 and Exhibit 6 Found in Executive Orders VR-203 and VR-204	

5.3 Preventative Maintenance Checklist Form

Component	Frequency	Date Inspected	Completed	Required Action Items
PROCESSOR	Yearly			
• Inspect drive coupling on the vacuum pump.			[ ]	
• Check the continuity of the heat trace cable.			[ ]	
RECIRCULATION BLOWER				
Replace every 10 years or 15,000 hours, whichever comes first.			[ ]	
VACUUM PUMP				
Replace every 10 years or 15,000 hours, whichever comes first.			[ ]	

5.4 GDF Maintenance Record

Date of Maintenance/ Test/Inspection/Failure (including date and time of maintenance call)	Repair date to correct test failure	Maintenance/Test/Inspection Performed and Outcome	Affiliation	Name and Technician ID Number of Individual Conducing Maintenance or Test	Telephone Number

Component Replacement

6 Blower Replacement

6.1 Blower Replacement Safety

Use lockout / tagout procedures prior to starting work.

6.2 Removing the Blower

1. Put the TLS 350 in the manual "OFF" mode.
   - See Figure 12: Page 15-39 or Figure 13: Page 15-40.

2. Disconnect power to the blower and vacuum pump motors. Do this at both the breaker and at the disconnect switch. The disconnect switch is located near the *Processor*.

3. Close the ball valves between the *Processor* and the vents.

4. Completely remove the two blower ¾" - 45° flare inlet and out tubes.
   - See Figure 23: Page 15-63.
   - NOTE: The nuts on the tubing are ¾" 45º flare, use caution not to damage the flared ends on the tubing or the threads on the nuts after removal.

5. Remove the two 45º flare inlet and outlet connection fittings from the blower.

6. Disconnect and remove the blower electrical from the motor.
   - See Figure 22: Page 15-63.

7. Remove (4) ¼" x ¾" mounting bolts.
   - The 4 holes in the blower stand are tapped 1/4".
   - Keep the (4) ¼" bolts for reuse or replace them with new ones.
   - CAUTION: The blower end of the blower/motor assembly is heavier than the motor end, which may cause the blower to fall off the stand. USE CAUTION when removing the bolts.

8. Remove the blower from the stand.

6.3 Installing the New Blower

1. Place the new blower on the blower stand.
2. Install and hand tighten the (4) ¼" x ¾" blower mounting bolts.
3. Install the two 45º flare inlet and outlet connection fittings into the blower.
4. Install the ¾" inlet and outlet tubing.
    - Do not use any thread-sealing compound when assembling the 45º flare nuts.
    - NOTE: When tightening the 45° flare nuts: Clamp the tube flare between nut and nose body of the tube by screwing the nut on finger tight. Tighten with a wrench an additional ¼ turn for a metal-to-metal seal.
5. After the tubing is installed and the 45° flare nuts tightened, tighten the (4) mounting bolts.
6. Reconnect the electrical power wires to the blower motor.
7. Remove the lock(s) and tags from the lockout & tagout.
8. Conduct a *Processor* Leak Check – see Section 3.8: Page 15-50 of this manual.
9. Open the ball valves between the Processor and the vent risers.
10. Turn ON power to the blower and vacuum pump at the breaker.
11. Put the TLS-350 in the manual ON mode.
12. Bump the power (briefly energize) the power at the disconnect switch.
13. Check the rotation of the blower motor.
14. Engage the disconnect switch.
15. After work is completed, put the TLS-350 in the AUTOMATIC mode.

    See Figure 12: Page 15-39 or Figure 13: Page 15-40.

Figure 22: Blower electrical connection conduit

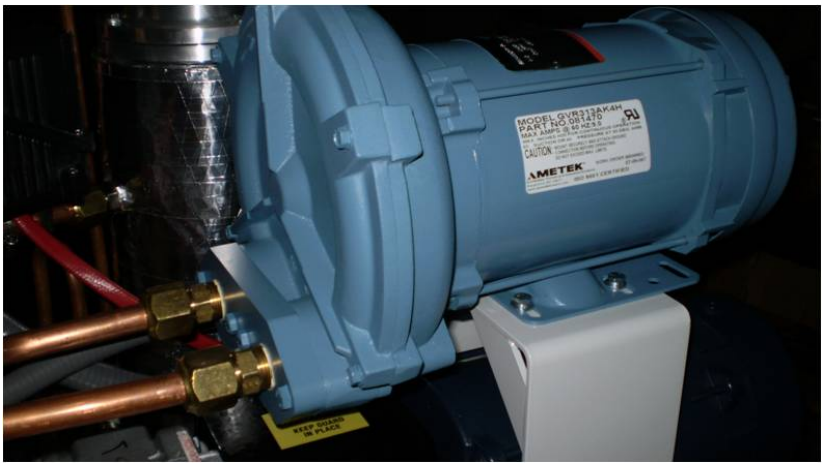

Figure 23: Blower inlet and outlet tubing connections and mounting bolts

7 Vacuum Pump Replacement

7.1 Safety

Use lockout / tagout procedures prior to starting work.

7.2 Removing the Vacuum Pump

1. Put the TLS 350 in the manual "OFF" mode.
   - See Figure 12: Page 15-39 or Figure 13: Page 15-40.

2. Disconnect power to the blower and vacuum pump motors. Do this at both the breaker and at the disconnect switch. The disconnect switch is located near the *Processor*.

3. Close the ball valves between the Processor and the vent risers.
   - NOTE: Before you begin disassembling, note that the vacuum pump and the motor are attached to a common base plate.

4. Completely remove the vacuum pump ½" outlet tubing.
   - **See** Figure 24: Page 15-66.

5. Completely remove the vacuum pump ½" and ¼" inlet 45º flare tubing and all pipe fittings connected to the vacuum pump.
   - **See** Figure 25: Page 15-66.

6. Completely remove the ¼" HC sensor inlet tubing at the air outlet and the HC sensor.
   - **See** Figure 26: Page 15-67 and Figure 27: Page 15-67.
   - NOTE: The tube ends are a Parker 45º flare, use caution not to damage the flared ends on the tubing or the threads on the nuts after removal.

7. Disconnect and remove the vacuum pump electrical from the motor.

8. Remove (4) ¼" x 1-½" mounting bolts from the vacuum pump motor assembly base plate.
   - Note: The vacuum pump and motor will stay connected to the base plate.
   - Keep the (4) bolts for reuse or replace with new.

9. Slide the vacuum pump out from under the blower stand.

7.3 Installing the new Vacuum Pump and Vacuum Pump Motor Assembly

1. Slide the new vacuum pump under the blower stand and align the mounting holes.
2. Install the (4) ¼" x 1-½" vacuum pump base mounting bolts.
3. Tighten the mounting bolts so that the bottom of the vacuum pump base is ⅛" from the ECS base.
4. Re-install the ½" and ¼" inlet 45° flare tubing and all pipe fittings connected to the vacuum pump.
5. Re-install the ½" outlet tubing.
6. Re-install the ¼" HC sensor inlet tubing.
   Do not use any thread sealing compound when assembling the 45 º flare nuts.

NOTE: When tightening the 45° flare nuts: Clamp the tube flare between nut and nose body of the tube by screwing the nut on finger tight. Tighten with a wrench an additional ¼ turn for a metal-to-metal seal.

7. Reconnect the electrical power wires to the vacuum pump motor.
8. Conduct a Processor Leak Check – see Section 3.8: Page 15-50 of this document.
9. Open the ball valves between the *Processor* and the vent risers.
10. Remove the lock(s) and tags from the lockout & tagout.
11. Turn ON power to the blower and vacuum pump at the breaker, but not at the disconnect switch.
12. Turn the Processor to the MANUAL ON mode.
13. Bump the power (briefly energize) the disconnect switch.
14. Check rotation of vacuum pump motor.
15. After work is completed, put the TLS-350 in the AUTOMATIC mode.

    See Figure 12: Page 15-39 or Figure 13: Page 15-40.

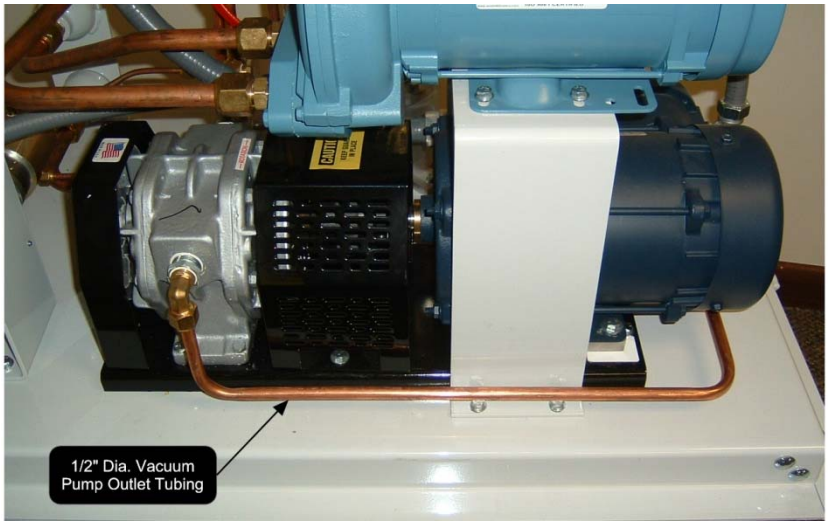

Figure 24: Vacuum pump outlet tubing connection

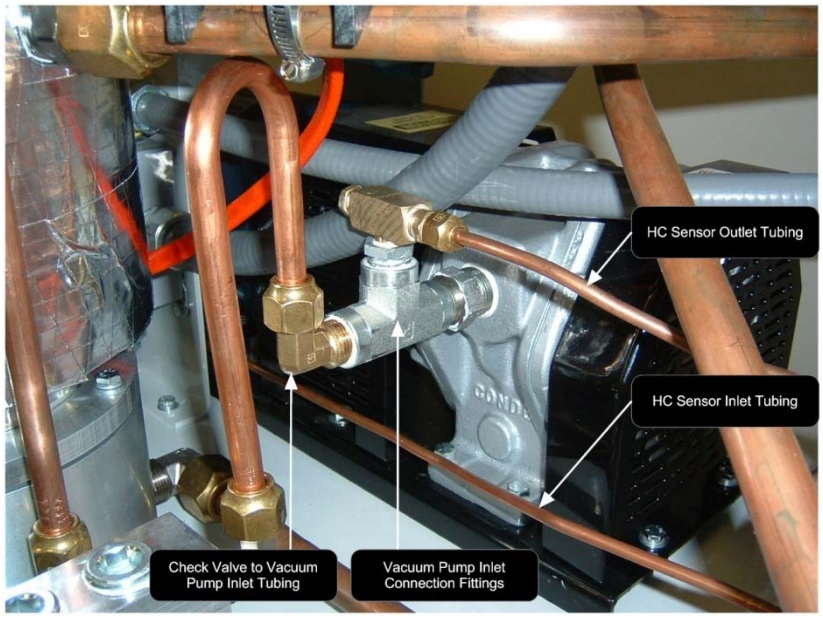

Figure 25: Vacuum pump inlet tubing and fittings

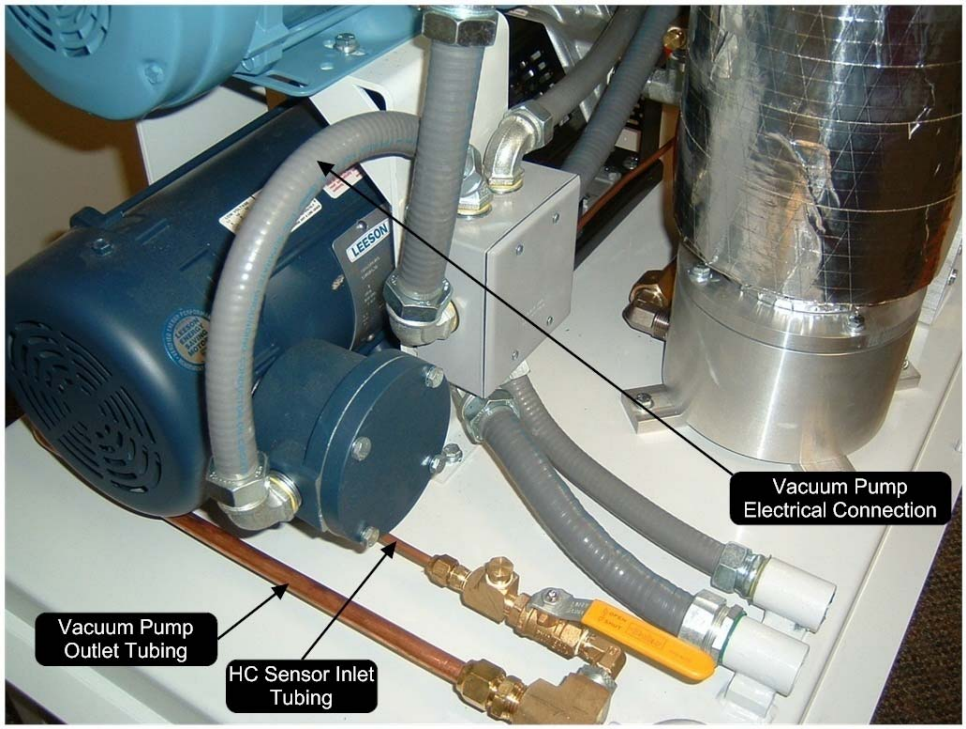

Figure 26: Vacuum pump electrical connection / vacuum pump outlet tubing / HC sensor inlet tubing

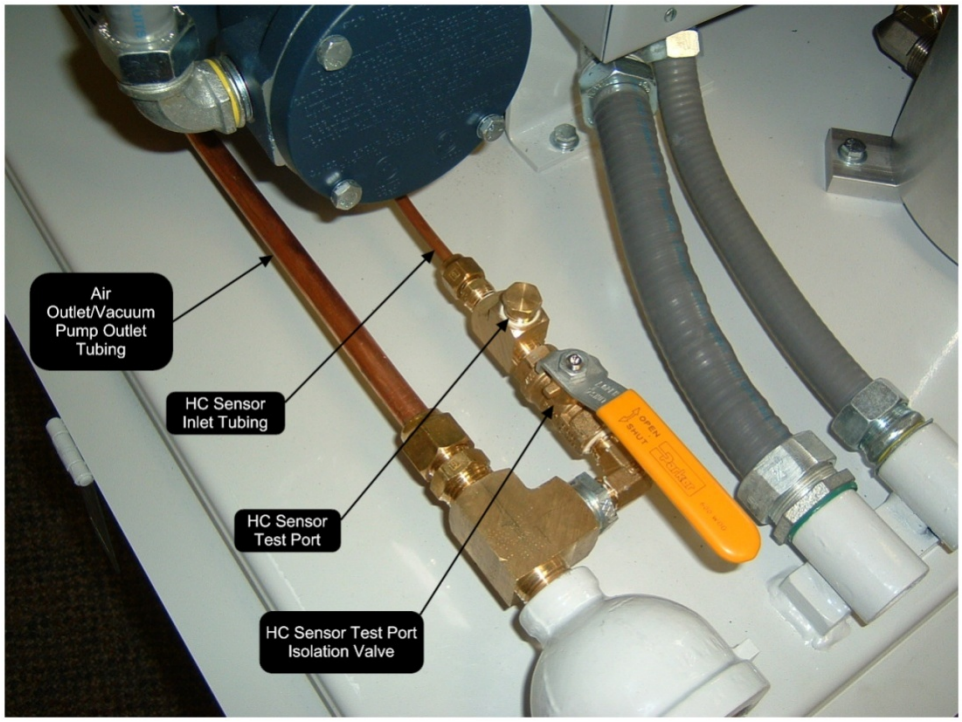

Figure 27: Air outlet / vacuum pump outlet / HC sensor inlet tubing

8 Membrane Replacement

8.1 Safety

Use lockout / tagout procedures prior to starting work.

8.2 Removing the Membrane from the Membrane Housing

1. Put the TLS 350 in the manual "OFF" mode. See Figure 12: Page 15-39 or Figure 13: Page 15-40.

2. At the breaker and at the disconnect switch, disconnect power to the heat trace cable, the vacuum pump, and the blower.

3. Close the ball valves between the *Processor* and the vent risers.

4. Disconnect and remove the ½" 45º flare tubing from the top and side of the membrane housing: See Figure 28: Page 15-68.

   NOTE: The nuts on the tubing are ¾" 45° flare. Use caution not to damage the flared ends on the tubing or the threads on the nuts after removal.

5. Remove the (4) ¼" bolts from the top plate (on top of the membrane housing).

6. Keep the (4) bolts/washers/lock washers for reuse.

7. Remove the top plate. A small lever may have to be used to gently pry the top plate off the membrane housing.

   The top plate seals against the vertical tube with an o-ring. Use caution when removing the top plate. The membrane is now exposed.

   See Figure 29: Page 15-68.

Figure 28: Membrane Housing

Figure 29: Exposed membrane with top plate removed.

Continued next page . . .

8. Gently screw the membrane extraction tool into the top of the membrane.
   Screw the extraction tool into the membrane until the threads bottom out.
   See Figure 30: Page 15-69.

CAUTION: Do not over tighten the extraction tool when screwing into the membrane.

Figure 30: Membrane extraction tool

9. Gently move the extraction tool side-to-side while pulling up with moderate force until the membrane becomes loose.

   CAUTION: Do not use excessive force or a twisting action to remove the membrane as these items may cause damage to the membrane epoxy potting.

   There are two o-rings on the inside bottom of the vertical tube causing resistance in removing the membrane

   An aluminum insert (Figure 31: Page 15-69) may still be attached to the bottom of the membrane or will stay in the membrane-housing base.

   DO NOT LOSE THE INSERT AS IT WILL BE NEEDED TO COMPLETE THE MEMBRANE INSTALLATION AND MAKE THE MEMBRANE OPERATION FUNCTIONAL.

Figure 31: Membrane base insert

10. Remove the extraction tool from the membrane.

11. Remove and discard the (4) o-rings:

    (2) O-rings on the membrane

    (2) O-rings on the base insert

    Keep the vertical tube top o-ring for re-use.

8.3 Installing the New Membrane

1. Install (4) new O-rings:
   (2) O-rings on the membrane (VST Part #5006-012).
   (2) O-rings on the base insert (VST Part #5006-013).

2. Use only silicon grease (not hydrocarbon-based grease) on the o-rings prior to installation.

   Hydrocarbon-based grease or lubricant will emit hydrocarbon vapors, which will be measured by the HC sensor and will cause inaccurate gas-level readings.

3. With (2) new o-rings on the "insert" installed, place the "insert" into the bottom of the base as orientated in Figure 31: Page 15-69.

4. With the (2) membrane o-rings installed, place the membrane into the membrane housing.
   Apply a moderate downward force with a mild side-to-side action to seat the membrane in the membrane base.

5. Install the existing top vertical tube o-ring (re-lubricated). Install the top plate.
   - The top plate will seat on the vertical tube o-ring while bolting the top plate in place.
   - DO NOT USE FORCE TO SEAT THE TOP PLATE.

6. Install the (4) ¼" bolts/washers/lock washers in the top plate/retaining ring to secure the top plate.

7. Tighten the (4) bolts to 85 in-lbs in a cross-pattern using 20%, 40%, 60%, 80%, 90%, 100% of torque.
   - This cross-pattern torque procedure will evenly seat the top plate to the vertical tube.

8. Re-install the ½" 45° flare tubing from the top/side of the membrane housing.
   - Note: When tightening the 45° flare nuts: Clamp the tube flare between nut and nose body of the tube by screwing the nut on finger tight. Tighten with a wench an additional ¼ turn for a metal-to-metal seal.

9. Perform a *Processor* Leak Test. See Section 3.8: Page 15-50.

10. Open the ball valves between the *Processor* and the vent risers.

11. Remove the lock(s) and tags from the lockout & tagout.

12. Turn ON power to the heat trace, blower, and vacuum pump.

13. After work is completed, put the TLS-350 in the AUTOMATIC mode.
    See Figure 12: Page 15-39 or Figure 13: Page 15-40.

9 Drive Coupling Rubber Insert Replacement

- NOTE: The drive coupling rubber insert replacement is done with the vacuum pump and motor assembly still attached to the ECS base.

9.1 Safety

Use lockout / tagout procedures prior to starting work.

9.2 Removing the Drive Coupling Insert

1. Prior to starting work, put the TLS-350 in the Manual OFF mode.
   - See Figure 12: Page 15-39 or Figure 13: Page 15-40
2. Close the ball valves between the *Processor* and the vent risers.
3. At the disconnect switch and at the breaker, disconnect the power to the blower and vacuum pump motors.
4. With the vacuum pump and motor assembly in-place on the ECS base, remove the drive coupling guard and the pump fan guard.
   - See Figures 32-33 Page 15-71
5. Completely remove the vacuum pump ½" outlet tubing.
   - See Figure 23: Page 15-63.
6. Completely remove the vacuum pump ½" and ¼" inlet 45º flare tubing and all pipe fittings connected to the vacuum pump.
   See Figure 25 Page: 15-66.
7. Completely remove the ¼" HC sensor inlet tubing at the air outlet and the HC sensor.
   - See Figure 49: Page 15-87.
   - NOTE: The tube ends are a Parker 45º flare, use caution not to damage the flared ends on the tubing or the threads on the nuts after removal.

Figure 33: Vacuum and motor assembly

Figure 32: Vacuum pump with guard removed

Continued next page. . .

8. Un-bolt the vacuum pump from the base and move the vacuum pump away from the motor.
   - Moving the vacuum pump away from the motor will separate the drive coupling for removal of the rubber insert.
   - Be sure to mark and keep any shims used under the vacuum pump for re-use (the shims are used for aligning the vacuum pump with the motor).
   - Keep the bolts for re-use.
   - See Figure 34: Page 15-72.

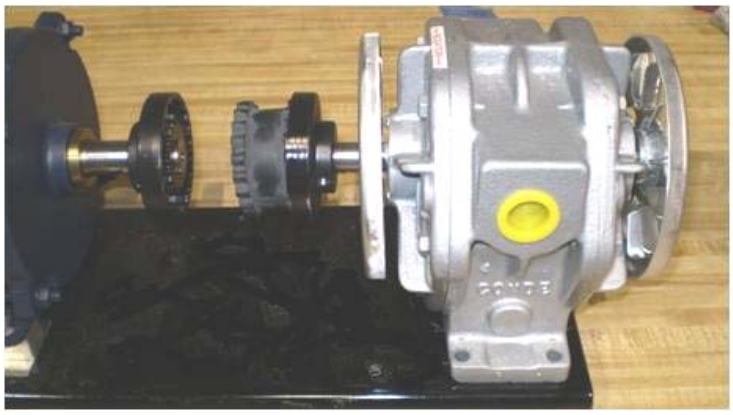

Figure 34: Vacuum pump unbolted and moved away from the motor

9.3 Installing the Drive Coupling Insert

1. Replace the rubber insert into the drive coupling.
   See Figure 35: Page 15-73.

2. Slide the vacuum pump towards the motor.
   - Place any shims under the vacuum pump in their original location.

3. Bolt the vacuum pump to the vacuum pump base.

4. Install the drive coupling and fan guards.

5. Re-install the ½" and ¼" inlet 45° flare tubing and all pipe fittings connected to the vacuum pump.

6. Re-install the ½" outlet tubing.

7. Re-install the ¼" HC sensor inlet tubing.
   Do not use any thread sealing compound when assembling the 45 ° flare nuts.
   NOTE: When tightening the 45° flare nuts: Clamp the tube flare between nut and nose body of the tube by screwing the nut on finger tight. Tighten with a wrench an additional ¼ turn for a metal-to-metal seal.

8. Perform a *Processor* leak test – see Section 3.8: Page 15-50 of this document.

9. Remove the lock(s) and tags from the lockout & tagout.

10. Open the ball valves between the *Processor* and the vent risers.

11. At the breaker, but not at the disconnect switch, turn ON power to the blower and vacuum pump.

12. Return the TLS-350 to the manual ON mode.

13. Using the disconnect switch near the Processor, briefly cycle the power to verify that there is no excessive vibration at the coupling.

continued next page . . .

15. After work is completed, put the TLS-350 in the AUTOMATIC mode and engage the disconnect. See Figures 12 or 13: Pages 15-39 & 15-40.

Figure 35: Drive coupling rubber insert

10 Heat Trace Cable Replacement

10.1 Safety

Use lockout / tagout procedures prior to starting work.
Disconnect electricity to the *Processor*.

10.2 Removing the Heat Trace Electrical Box

1. Prior to starting work, put the TLS-350 in the Manual "OFF" mode
   - See Figure 12 or 13: Pages 15-39 & 15-40.
   - Remove power to the *Processor* by either turning OFF the breaker or by disconnecting power at the *Processor*.

2. At the breaker, disconnect power to the heat trace cable.

3. Remove the entire heat trace electrical box from the ¾" tubing.

4. Disconnect and remove the heat trace cable from inside the electrical junction box.
   - Remove the top cover from the electrical junction box (be sure to keep the screws for reuse).
   - Remove the 115V and ground wires from the terminal block located inside the electrical junction box.
   - See Figure 36: Page 15-76.
   - Remove the bottom plate (be sure to keep the screws for reuse).
   - Pull the heat trace cable out of the electrical box and bottom plate (be sure keep the rubber grommet for reuse).

5. Completely remove the 1" thick F/G insulation from the membrane housing.
   - Cutting on the insulation seam, remove the insulation (with the aluminum tape attached) in one piece and save for reuse.
   - See Figure 37: Page 15-76.

6. Peel the aluminum tape off the heat trace cable and discard.
   - This will expose the heat trace cable and end seal kit.

7. Disassemble the seal kit and remove the heat trace cable.
   - Retain the end seal kit parts for re-use.

10.3 Overview for Installing the New Heat Trace Cable

1. VST has found that making both the end seal kit and electrical junction box connection first to the heat trace cable works the best.

2. After both connections are made to the heat trace cable, attach the electrical junction box to the ¾" tube.

3. After the electrical junction box is attached to the ¾" tube, wrap the heat trace cable around the vertical tube starting at the bottom and wrapping towards the top, applying aluminum tape on each revolution.

4. The last step is to secure the end seal kit to the vertical tube.

10.4 Steps for Installing the New Heat Trace Cable

1. Install the end seal kit on the heat trace cable:
   - Using a multimeter, check the heat trace cable electrical circuit continuity at the electrical junction box to insure the circuit is complete and is not in a ground fault condition.
   - See Figure 38: Page 15-76. End Seal Kit Components
   - See the Figures 39-40: Pages 15-15 and 15-16. Chromalox End Seal Kit Installation Instruction (2-Pages -) to install the heat trace cable on the end seal kit
   - Figure 41: Page 15-79. Prepare the New Heat Trace Cable for installation into the End Seal Kit

2. Install the heat trace cable to the electrical junction box.
   - See Figures 42-45: Pages 15-80 through 15-83. Electrical Junction Box Installation Instructions, (4-Pages).

3. Attach the electrical junction box to the ¾" tube (attached to the membrane housing).

4. Wrap the heat trace cable around the vertical tube starting at the bottom and wrapping towards the top, applying aluminum tape on each revolution.
   - Be sure to install the heat trace cable **flat** against the membrane housing – free of twists.
   - Use nylon reinforced aluminum tape.

5. Secure the end seal kit/heat trace cable to the top section of the top section of the vertical tube.
   - See Figure 46: Page 15-84 End Seal Kit Location and Heat Trace Cable Installation.
   - The heat trace cable on the vertical tube should be completely wrapped with aluminum tape. (Note: The nylon reinforced aluminum tape serves two purposes, it holds the heat trace cable in place while installing the heat trace cable on the vertical tube, and it insures the heat trace cable is held firmly in contact with the vertical tube).

6. The installation is now complete.
   - See Figure 47: Page 15-85. Installed Electrical Junction Box with Electrical Connections.

7. Check all electrical connections for loose wires.

Continued next page . . .

8. Remove the lock(s) and tags from the lockout & tagout.

9. Turn ON power to the Heat Trace Cable and vacuum pump.

10. After work is completed, put the TLS-350 in the AUTOMATIC mode.
    - See Figure 12 or 13: Pages 15-39 and 15-40.

Figure 36: Termination block inside the electrical junction box

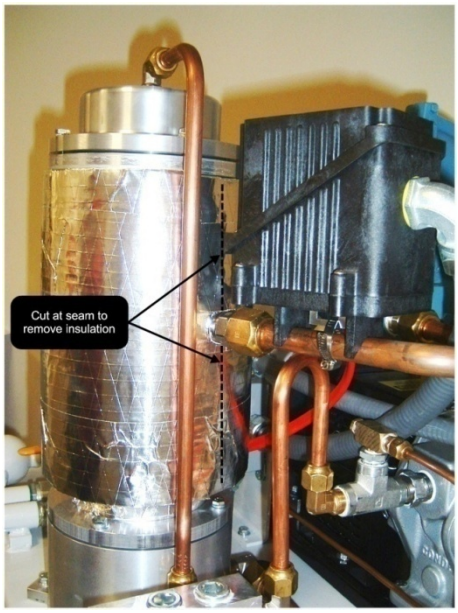

Figure 37: Seam to cut to remove the insulation

Figure 38: End seal kit components

Connection screws
End cap
Grommet
Pressure plate
Heat trace cable

Chromalox®

Installation Instructions

SERVICE REFERENCE		
DIVISION 4	SECTION RT	
SALES REFERENCE	(Supersedes PJ450-9)	PJ450-10
		161-562761-001
DATE	MARCH, 2004	

Type RTES End Seal Kit for Self-Regulating and Constant Wattage Rapid-Trace Heating Cable

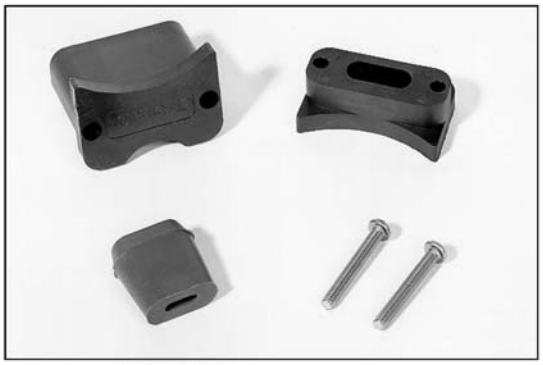

RTES Kit Parts:

1 - End Cap	1 - Pressure Plate
2 - Screws	1 - Grommet

GENERAL

The RTES kit is used for terminating braided (-C) and overcoated (-CR or -CT) versions of Self-Regulating and Fluoropolymer insulated Constant Wattage Rapid-Trace Heating Cable. The cable grommet is furnished with this kit such that the kit suffix number is the same as the grommet number (eg., an RTES-3 kit uses a GR3 grommet). Refer to the list below to insure you have the proper grommet for the cable you are installing.

GR1 for SRL-C
GR2 for SRL-CR or SRL-CT
GR3 for CWM-C
GR4 for CWM-CT
GR5 for SRL-MC
GR6 for SRL-MCR or SRL-MCT
GR7 for SRM/E-C
GR8 for SRM/E-CT

Each kit contains enough material to make one termination. Materials required include: standard electrical cutters, screwdriver and fiberglass tape.

INSTALLATION

⚠WARNING

ELECTRIC SHOCK HAZARD. Disconnect all power before installing or servicing heating cable and accessories. A qualified person must perform installation and service of heating cable and accessories. Heating cable must be effectively grounded in accordance with the National Electrical Code. Failure to comply can result in personal injury or property damage.

Note: All electrical wiring, including GFCI (Ground Fault Circuit Interrupters), must be done in accordance with the National Electrical Code and local codes by a qualified person.

Note: These instructions are for all Self-Regulating and Constant Wattage heating cables in ordinary locations. Consult factory for installation of braided cable in hazardous locations. Not all instructions, are for all cables. Each step has a boldface heading stating what type of cable that instruction is for.

1. **FOR CONSTANT WATTAGE CABLE:**
   Using standard electrical cutters, make a perpendicular cut across the cable four inches from the last module point.

Note: Cutting the cable between module points (indentions in cable) creates a non-heated cold lead. See Figure 1.

Figure 1

© 2004 Chromalox, Inc.

Figure 39: End seal kit installation instructions, page 1 of 2

INSTALLATION

2. FOR CABLE WITH EXPOSED METAL BRAID (-C):
Push the braid back three inches to expose the base cable insulation. See Figure 2.

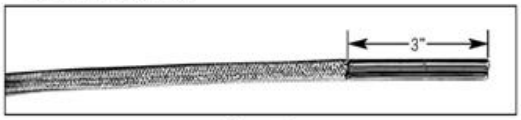

Figure 2

3. FOR ALL CABLE:
Slide the pressure plate and grommet over the end of the cable. **Note:** The pressure plate and end cap have different size curved surfaces on the top and bottom of each piece. These curved surfaces are designed to give a better fit on process equipment. The side with the smaller radius curve is for use on pipes with diameters up to three inches or on flat surfaces. The other side is for use on pipes with diameters of three inches or more. See Figure 3 and Figure 8.

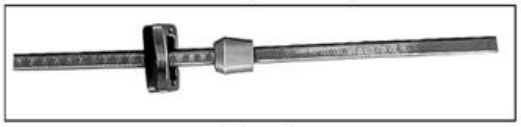

Figure 3

4. FOR OVERCOATED CABLES (-CR or -CT):
Score the outer jacket one inch from the end of the cable. Remove the jacket to expose the braid. Unravel and trim the braid flush with the outer jacket. Pull any strands of braid back towards the outer jacket. See Figure 4.

Figure 4

5. FOR ALL CABLE:
Using standard electrical cutters, cut a "VEE" notch between the buss wires. See Figure 5.

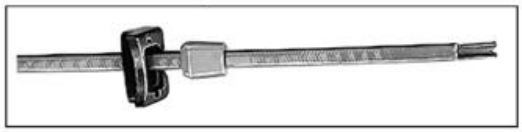

Figure 5

6. FOR ALL CABLE:
Slide the pressure plate and grommet towards the end of the cable leaving 5/8" of the cable extending past the end of the grommet. See Figure 6.

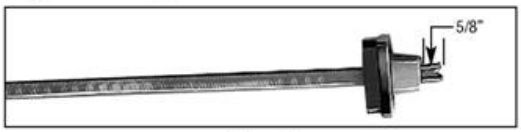

Figure 6

7. FOR ALL CABLE:
Slide the end cap over the grommet. Using a screwdriver, connect the pressure plate to the end cap. See Figure 7.

Figure 7

8. FOR ALL CABLE:
Using a fastening device, fiber re-inforced electrical tape (Chromalox FT-1 or equal), secure the assembly to the pipe. Wrap the tape around the assembly between the legs. See Figure 8.

Figure 8

WARRANTY AND LIMITATION OF REMEDY AND LIABILITY

Chromalox warrants only that the Products and parts manufactured by Chromalox, when shipped, and the work performed by Chromalox when performed, will meet all applicable specification and other specific product and work requirements (including those of performance), if any, and will be free from defects in material and workmanship under normal conditions of use. All claims for defective or nonconforming (both hereinafter called defective) Products, parts or work under this warranty must be made in writing immediately upon discovery, and in any event, within one (1) year from delivery, provided, however all claims for defective Products and parts must be made in writing no later than eighteen (18) months after shipment by Chromalox. Defective and nonconforming items must be held for Chromalox's inspections and returned to the original f.o.b. point upon request. THE FOREGOING IS EXPRESSLY IN LIEU OF ALL OTHER WARRANTIES WHATSOEVER, EXPRESS, IMPLIED AND STATUTORY, INCLUDING, WITHOUT LIMITATION, THE IMPLIED WARRANTIES OF MERCHANTABILITY AND FITNESS FOR A PARTICULAR PURPOSE.

Notwithstanding the provisions of this WARRANTY AND LIMITATION Clause, it is specifically understood that Products and parts not manufactured and work not performed by Chromalox are warranted only to the extent and in the manner that the same are warranted to Chromalox by Chromalox's vendors, and then only to the extent that Chromalox is reasonably able to enforce such warranty, it being understood Chromalox shall have no obligation to initiate litigation unless Buyer undertakes to pay all cost and expenses therefor, including but not limited to attorney's fees, and indemnifies Chromalox against any liability to Chromalox's vendors arising out of such litigation.

Upon Buyer's submission of a claim as provided above and its substantiation, Chromalox shall at its option either (i) repair or replace its Products, parts or work at the original f.o.b. point of delivery or (ii) refund an equitable portion of the purchase price.

THE FOREGOING IS CHROMALOX'S ONLY OBLIGATION AND BUYER'S EXCLUSIVE REMEDY FOR BREACH OF WARRANTY, AND IS BUYER'S EXCLUSIVE REMEDY AGAINST CHROMALOX FOR ALL CLAIMS ARISING HEREUNDER OR RELATING HERETO WHETHER SUCH CLAIMS ARE BASED ON BREACH OF CONTRACT, TORT (INCLUDING NEGLIGENCE AND STRICT LIABILITY) OR OTHER THEORIES, BUYER'S FAILURE TO SUBMIT A CLAIM AS PROVIDED ABOVE SHALL SPECIFICALLY WAIVE ALL CLAIMS FOR DAMAGES OR OTHER RELIEF, INCLUDING BUT NOT LIMITED TO CLAIMS BASED ON LATENT DEFECTS. IN NO EVENT SHALL BUYER BE ENTITLED TO INCIDENTAL OR CONSEQUENTIAL DAMAGES AND BUYER SHALL HOLD CHROMALOX HARMLESS THEREFROM. ANY ACTION BY BUYER ARISING HEREUNDER OR RELATING HERETO, WHETHER BASED ON BREACH OF CONTRACT, TORT (INCLUDING NEGLIGENCE AND STRICT LIABILITY) OR OTHER THEORIES, MUST BE COMMENCED WITHIN ONE (1) YEAR AFTER THE DATE OF SHIPMENT OR IT SHALL BE BARRED.

W2008M

Chromalox®
PRECISION HEAT AND CONTROL
1382 HEIL QUAKER BLVD., LAVERGNE, TN 37086
Phone: (615) 793-3900 www.chromalox.com

98 - 068
TA - Q4 - EF
Litho in U.S.A.

Figure 40: End seal kit installation instructions, page 2 of 2

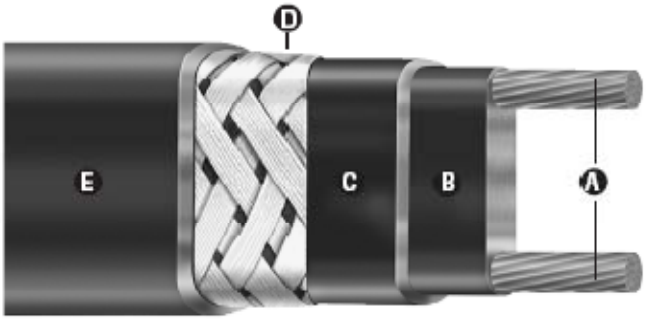

Figure 41: Prepare the new heat trace cable for installation into the end seal kit

A. Twin 14 AWG copper buss wires
B. Semi-conductive polymer core
C. High temp. fluoropolymer jacket
D. Metallic braid ground
E. High temperature fluoropolymer jacket

Chromalox®

Installation Instructions

SERVICE REFERENCE		
DIVISION 4		SECTION RT
SALES REFERENCE	(Supersedes PJ451-9)	PJ451-10
		161-562762-001
DATE	MARCH, 2004	

RTPC Power Connection Kit for Self-Regulating and Constant Wattage Rapid-Trace Heating Cable

RTPC Power Connection Kit Parts:

1 - Molded Junction Box consisting of: Base - Box - Lid - Hardware
1 - Three Position Terminal Block
1 - Mounting Screw for Terminal Block
1 - Cable Grommet
1 - Cover Gasket

GENERAL

⚠WARNING

ELECTRIC SHOCK HAZARD. Disconnect all power before installing or servicing heating cable and accessories. A qualified person must perform installation and service of heating cable and accessories. Heating cable must be effectively grounded in accordance with the National Electrical Code. Failure to comply can result in personal injury or property damage.

NOTE: All electrical wiring, including GFCI (Ground Fault Circuit Interrupters), must be done according to National Electrical or local codes by a qualified person.

The RTPC Kit is used to connect base, braided (-C) and over-coated (-CR or -CT) versions of Self-Regulating and Fluoropolymer insulated Constant Wattage Rapid-Trace Heating Cables to power. The cable grommet is furnished with this kit, such that the kit suffix number is the same as the grommet number (eg., an RTPC-3 kit uses a GR3 grommet). Refer to the list below to insure you have the proper grommet for the cable you are installing.

GR1 for SRL-C	GR2 for SRL-CR or SRL-CT
GR3 for CWM-C	GR4 for CWM-CT
GR5 for SRL-MC	GR6 for SRL-MCR or SRL-MCT
GR7 for SRM/E-C	GR8 for SRM/E-CT

Each kit contains enough material to make one power connection point. It is possible to connect up to three Self-Regulating or two Constant Wattage Cables in the same box. (One grommet required for each cable.)

Materials required for installation include: standard electrical cutters, screwdriver, sharp utility knife and a pipe strap (Chromalox PS or equal).

Wipe inside lip of cover with a clean cloth. Remove protective backing from the gasket and affix it to the cover lip. Press firmly all around for proper adhesion.

© 2004 Chromalox, Inc.

Figure 42: Electrical junction box installation instructions, page 1 of 4

INSTALLATION

NOTE: These instructions are for all Self-Regulating and Constant Wattage heating cables in ordinary locations. Consult factory for installation of braided cable in hazardous locations. Not all instructions are for all cables. Each step of the instructions will have a heading in boldface stating what type of cable each instruction is intended for.

1. **FOR CONSTANT WATTAGE CABLES:**
   Cut the cable 12 inches past the last module point (indentation in cable). **NOTE:** Cutting the cable between module points creates a non-heating cold lead. See Figure 1.

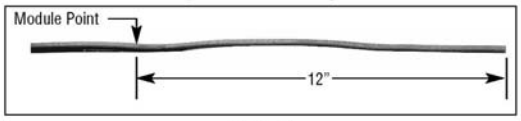

Figure 1

2. **FOR CABLE WITH EXPOSED METAL BRAID (-C):**
   Push the braid back 12 inches on the cable. See Figure 2.

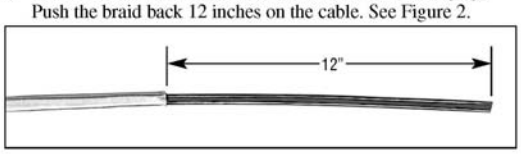

Figure 2

3. **FOR ALL CABLES:**
   Feed the ends of the cables through the appropriate hole in the base. Allow eight (8) inches of cable to extend above the top of the base. See Figure 3.

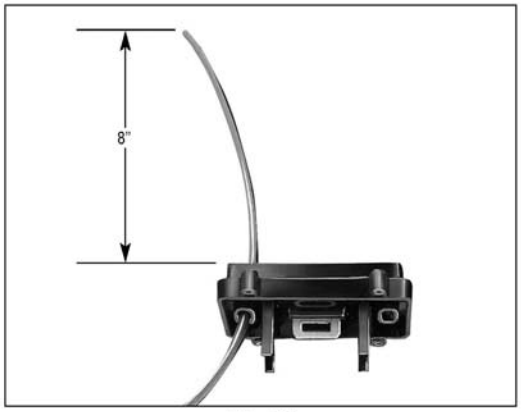

Figure 3

4. **FOR ALL CABLES:**
   Slide cable grommet over the end of the cable and insert it into the opening in the base. Secure the base to the pipe by threading the appropriate sized pipestrap through the slot in the mounting plate. Tighten the pipestrap until the base is securely attached to the pipe. See Figure 4.

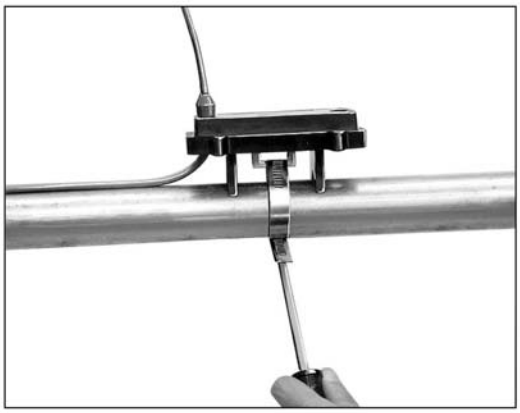

Figure 4

5. **FOR OVERCOATED CABLES (-CR or -CT):**
   Score the outer insulation seven (7) inches from the end of cable. Remove the jacket to expose the metal braid. See Figure 5. **CAUTION:** ***When removing the outer jacket, be careful not to damage the braid or the base cable insulation.***

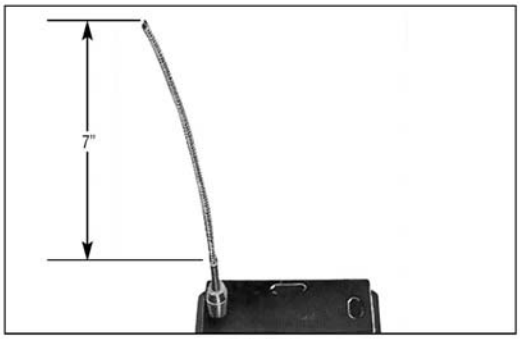

Figure 5

6. **FOR ALL CABLES:**
   Punch out the knockouts on the bottom of the box which correspond to the openings in the base through which the heating cable passes. Be careful to punch out only those knockouts to be used. If one is mistakenly punched, blank grommets can be ordered to re-establish the water tight seal. See Figure 6.

Figure 6

Figure 43: Electrical junction box installation instructions, page 2 of 4

INSTALLATION

7. FOR ALL CABLES:
Feed the cables through the corresponding holes in the box. Secure box to base using all four (8-32) screws. See Figure 7.

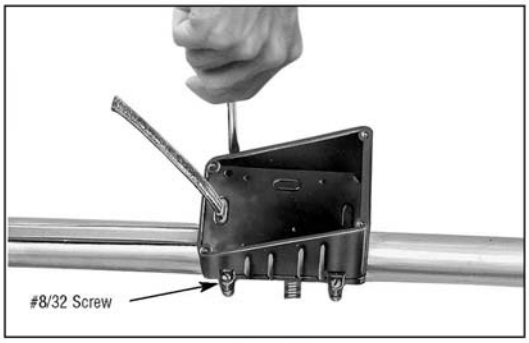

Figure 7

8. FOR OVERCOATED CABLES:
Starting from the end of the cable, unravel 2-1/2 inches of the braid. Twist the strands together to form a pigtail. See Figure 8.

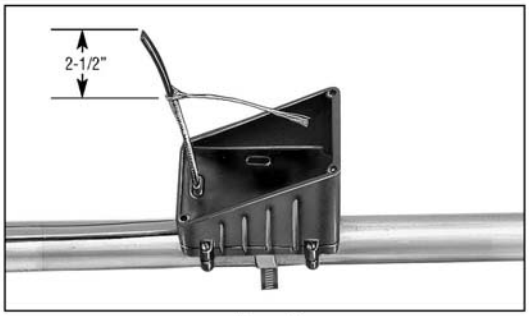

Figure 8

9. FOR SELF-REGULATING CABLES:
Using standard electrical cutters, cut a 3/4 inch long notch out of the cable between the conductor wires. Bare a 3/8 inch length of each conductor by stripping off the outside insulation and the inner black core material. See Figure 9.

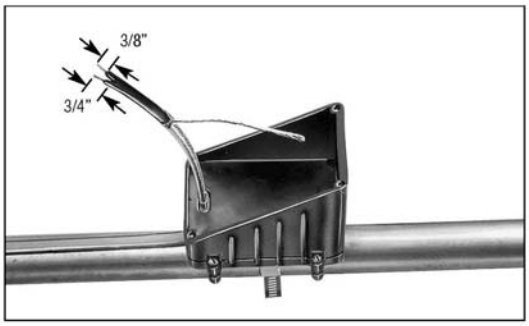

Figure 9

10. FOR CONSTANT WATTAGE CABLES:
Score the outer jacket 3/4 inch from the end of the cable and remove the jacket. Cut off the exposed nichrome wire, pushing any remainder back under the jacket. These cables have an inner layer of insulation which is also to be removed as described above. Separate the buss wires and strip off the last 3/8 inch of insulation from both buss wires. See Figure 10.

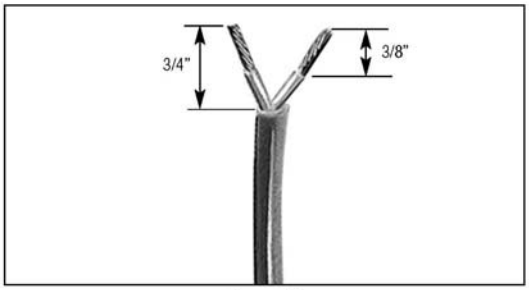

Figure 10

11. FOR ALL CABLES:
Insert the bared ends of the conductors into the openings in the terminal block. Tighten screws firmly to hold conductors in place. See Figure 11.

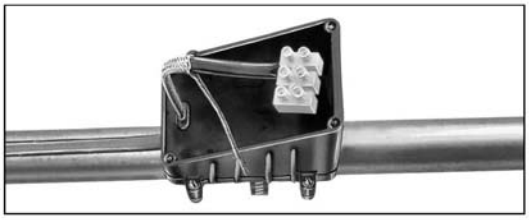

Figure 11

12. FOR OVERCOATED CABLES (-CR or -CT):
Insert the end of the braid pigtail into the remaining opening in the terminal block. Tighten screw firmly to hold the braid in place. See Figure 12.

Figure 12

13. FOR ALL CABLES:
Connect conduit hub (Chromalox CCH or equal) to the box. Attach conduit to hub and bring power leads into box. See Figure 13.

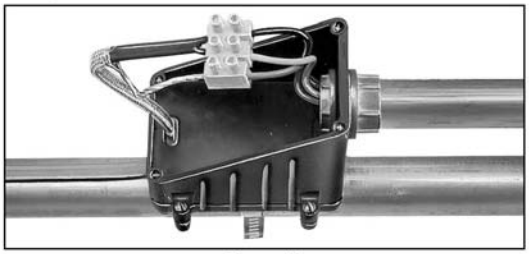

Figure 13

Figure 44: Electrical junction box installation instructions, page 3 of 4

INSTALLATION

14. FOR ALL CABLES:
Strip 3/8 inch length of each conductor of the power cord. Insert the bared ends of the conductors into the corresponding openings on the unused side of the terminal block. Remember, the green (ground) wire must be opposite of the opening of the terminal block which is either empty or contains the metal braid. See Figure 14.

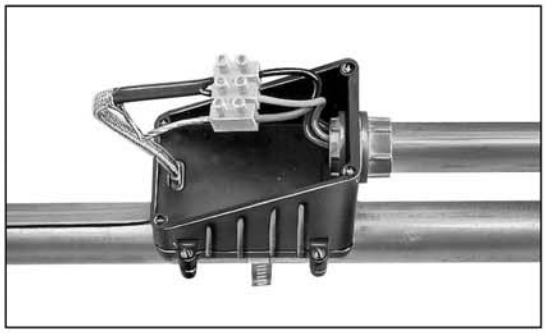

Figure 14

15. FOR ALL CABLES:
Mount terminal block to bottom of the box by driving the 6/32 self-tapping screw into the mounting hole as shown. See Figure 15.

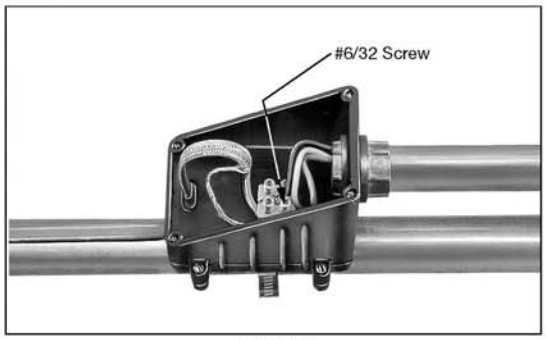

Figure 15

16. FOR ALL CABLES:
Carefully push the wires into the box. Secure the lid to box. See Figure 16.

Figure 16

17. FOR CABLE WITH EXPOSED METAL BRAID (-C):
Unravel four (4) inches of braid from the cable and twist into a pigtail.

⚠WARNING

ELECTRIC SHOCK HAZARD. The twisted braid must be effectively grounded in accordance with the National Electrical Code to eliminate electric shock hazard.

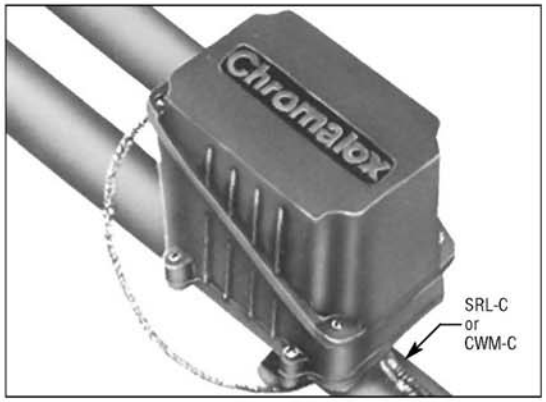

Figure 17

WARRANTY AND LIMITATION OF REMEDY AND LIABILITY

Chromalox warrants only that the Products and parts manufactured by Chromalox, when shipped, and the work performed by Chromalox when performed, will meet all applicable specification and other specific product and work requirements (including those of performance), if any, and will be free from defects in material and workmanship under normal conditions of use. All claims for defective or nonconforming (both hereinafter called defective) Products, parts or work under this warranty must be made in writing immediately upon discovery, and in any event, within one (1) year from delivery, provided, however all claims for defective Products and parts must be made in writing no later than eighteen (18) months after shipment by Chromalox. Defective and nonconforming items must be held for Chromalox's inspections and returned to the original f.o.b. point upon request. THE FOREGOING IS EXPRESSLY IN LIEU OF ALL OTHER WARRANTIES WHATSOEVER, EXPRESS, IMPLIED AND STATUTORY, INCLUDING, WITHOUT LIMITATION, THE IMPLIED WARRANTIES OF MERCHANTABILITY AND FITNESS FOR A PARTICULAR PURPOSE.

Notwithstanding the provisions of this WARRANTY AND LIMITATION Clause, it is specifically understood that Products and parts not manufactured and work not performed by Chromalox are warranted only to the extent and in the manner that the same are warranted to Chromalox by Chromalox's vendors, and then only to the extent that Chromalox is reasonably able to enforce such warranty, it being understood Chromalox shall have no obligation to initiate litigation unless Buyer undertakes to pay all cost and expenses therefor, including but not limited to attorney's fees, and indemnifies Chromalox against any liability to Chromalox's vendors arising out of such litigation.

Upon Buyer's submission of a claim as provided above and its substantiation, Chromalox shall at its option either (i) repair or replace its Products, parts or work at the original f.o.b. point of delivery or (ii) refund an equitable portion of the purchase price.

THE FOREGOING IS CHROMALOX'S ONLY OBLIGATION AND BUYER'S EXCLUSIVE REMEDY FOR BREACH OF WARRANTY, AND IS BUYER'S EXCLUSIVE REMEDY AGAINST CHROMALOX FOR ALL CLAIMS ARISING HEREUNDER OR RELATING HERETO WHETHER SUCH CLAIMS ARE BASED ON BREACH OF CONTRACT, TORT (INCLUDING NEGLIGENCE AND STRICT LIABILITY) OR OTHER THEORIES. BUYER'S FAILURE TO SUBMIT A CLAIM AS PROVIDED ABOVE SHALL SPECIFICALLY WAIVE ALL CLAIMS FOR DAMAGES OR OTHER RELIEF, INCLUDING BUT NOT LIMITED TO CLAIMS BASED ON LATENT DEFECTS. IN NO EVENT SHALL BUYER BE ENTITLED TO INCIDENTAL OR CONSEQUENTIAL DAMAGES AND BUYER SHALL HOLD CHROMALOX HARMLESS THEREFROM. ANY ACTION BY BUYER ARISING HEREUNDER OR RELATING HERETO, WHETHER BASED ON BREACH OF CONTRACT, TORT (INCLUDING NEGLIGENCE AND STRICT LIABILITY) OR OTHER THEORIES, MUST BE COMMENCED WITHIN ONE (1) YEAR AFTER THE DATE OF SHIPMENT OR IT SHALL BE BARRED.

W2008M

Chromalox®
PRECISION HEAT AND CONTROL
1382 HEIL QUAKER BLVD., LAVERGNE, TN 37086
Phone: (615) 793-3900 www.chromalox.com

98 - 025
TA - Q4 - EF
Litho in U.S.A.

Figure 45: Electrical junction box installation instructions, page 4 of 4

Figure 46: End seal kit location and heat trace cable installation

Figure 47: Installed electrical junction box with electrical connections

11 Hydrocarbon Infrared (HC IR) Sensor Module Replacement

11.1 Safety

Use lockout / tagout procedures prior to starting work.

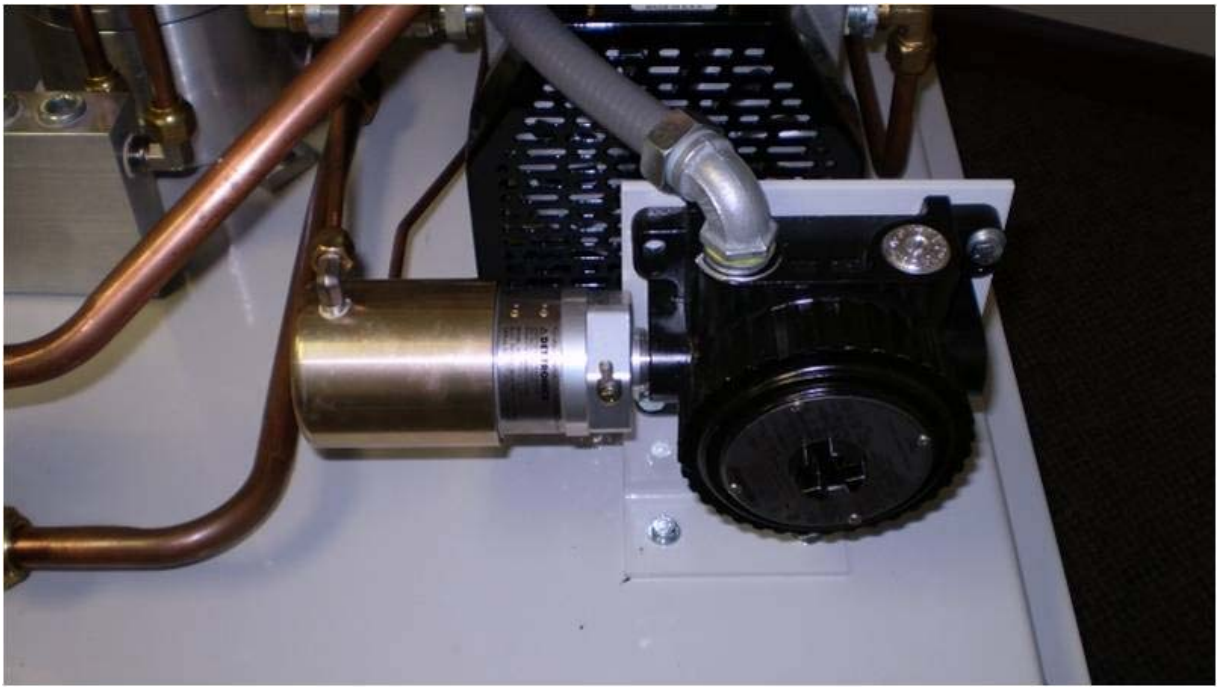

Figure 48: HC IR Sensor Module and Electrical Housing Assembly

11.2 Removing HC IR Sensor from the HC IR Sensor Module Electrical Housing

1. Prior to starting work, put the TLS-350 in the Manual "OFF" mode.
   See Figure 12: Page 15-39 or Figure 13: Page 15-40.

2. At the disconnect switch or the breaker, disconnect power to the heat trace cable, the vacuum pump, and the blower motors.

3. In the electrical room, turn off the HC Sensor power by disconnecting the 115V power to the HC Sentry Module.

4. Disconnect and completely remove the ¼" 45° flare tubing from the top and bottom sides of the HC IR Sensor Module.
   - See Figure 49: Page 15-87.
   - NOTE: The nuts on the tubing are ¼" 45° flare. Use caution to avoid damaging the flared ends on the tubing or the threads on the nuts after removal.

5. Remove the cover on the electrical house and keep for re-use.
   - NOTE: Do not remove the HC sensor electrical housing.

Continued next page . . .

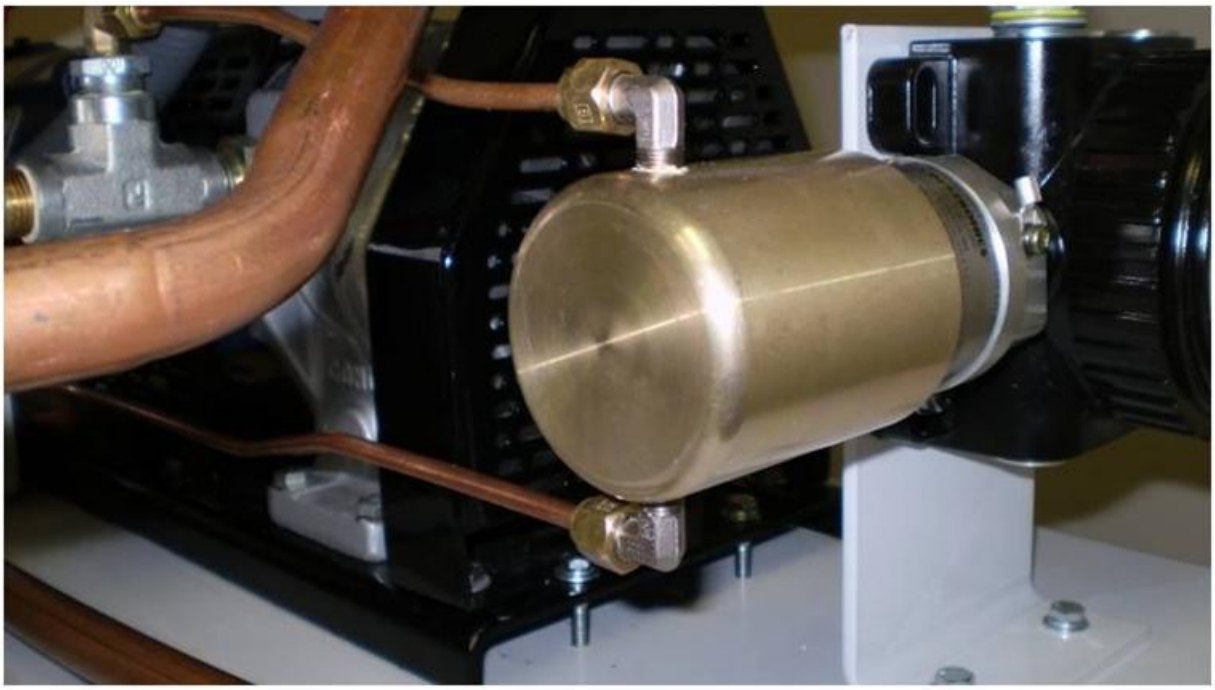

Figure 49: HC IR Sensor Module 1/4" 45º tubing and fittings

6. Disconnect the following HC IR sensor wires from the electrical housing circuit board:

   - White: 4-20 mA signal wire
   - Black: -(common) RET wire
   - Red: +24VDC power wire
   - NOTE: The yellow and green wires are not used in this application.
   - See Figures 50 and 51: Page 15-88.

7. Unscrew and remove the HC IR Sensor Module from the electrical housing.
   - Package the used HC IR Sensor Module in the anti-static bag and box that came with the new / recalibrated HC IR Sensor Module unit.
   - The used HC IR Sensor Module can be sent back to VST for re-calibration.

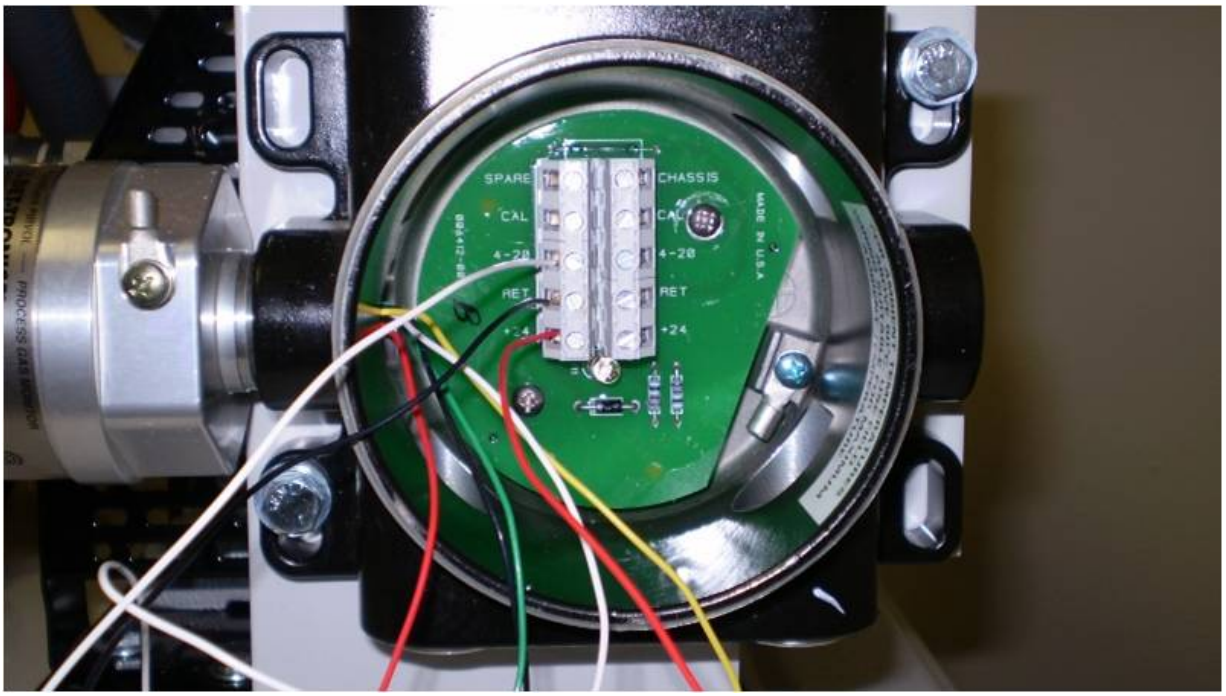

Figure 50: HC IR Sensor Electrical Housing Circuit Board

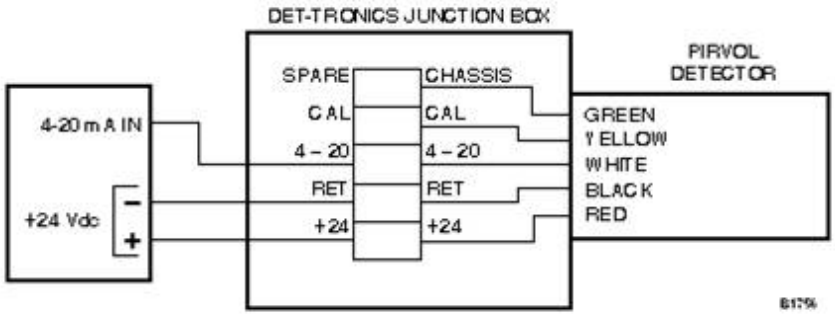

Figure 51: HC IR Sensor Electrical Housing Circuit Board Wiring Diagram

11.3 Installing a New or Re-calibrated HC IR Sensor Module to the HC IR Sensor Module Electrical Housing

1. Use only silicon grease (not hydrocarbon-based grease) to lubricate the HC IR sensor threads prior to installation.
   - Hydrocarbon-based grease or lubricant will emit hydrocarbon vapors, which will be measured by the HC sensor and will cause inaccurate gas-level readings.

2. Screw the new / re-calibrated HC IR sensor module to the electrical housing.
   - Remove the aluminum cover from the HC IR sensor.
   - While screwing on the sensor, orient the optics in the vertical position.
   - See Figure 52: Page 15-89.

3. Replace the aluminum cover on the HC IR sensor.

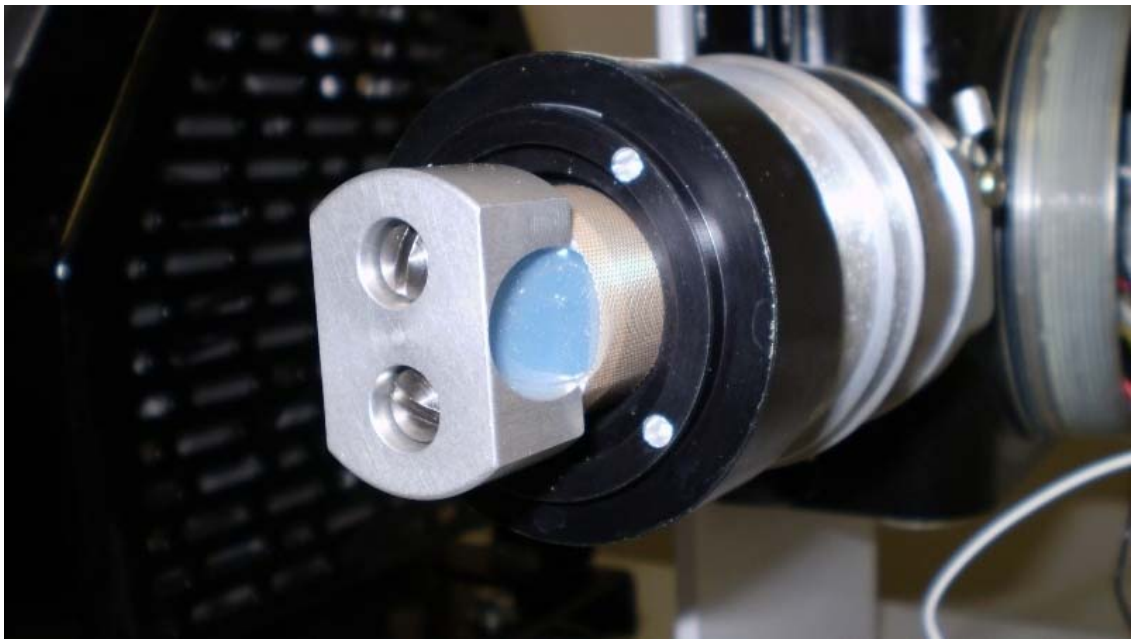

Figure 52: HC IR sensor installation orientation

4. Connect the following HC IR sensor wires to the electrical housing circuit board:
   - White: 4-20 mA signal wire
   - Black: -(common) RET wire
   - Red: +24VDC power wire
   - NOTE: the yellow and green wires are not used in this application.
   - See Figures 50 and 51: Pages 15-X and 15-Y.

5. Install the cover on the electrical housing.
   - Use only silicon grease (not hydrocarbon-based grease) to lubricate the cover threads prior to installation.
   - Hydrocarbon-based grease or lubricant will emit hydrocarbon vapors, which will be measured by the HC sensor and will cause inaccurate gas-level readings.

6. Re-install the (2) ¼" 45° flare tubing on the top and bottom sides of the HC IR sensor module.
   - NOTE: When tightening the 45° flare nuts, clamp the tube flare between the nut and the nose body of the tube by screwing the nut on finger-tight. Tighten with a wrench an additional ¼-turn for a metal-to-metal seal.

7. Remove the lock(s) and tags from the lockout/tagout.

8. At the breaker and at the disconnect switch, turn ON power to the heat trace, blower, and vacuum pump.

9. In the electrical room, turn ON power to the HC Sentry Module.

10. Perform a *Processor* Leak Test – see Section 3.8: Page 15-50 of this document.

11. After the installation is complete, put the TLS-350 in the AUTOMATIC ON mode.
    - See Figure 12 or 13: Pages 15-39 and 15-40.

12 Forms

- The following pages contain forms for:
    - ► Scheduled preventative maintenance list
    - ► Scheduled preventative maintenance checklist

12.1 Preventative Maintenance

Preventative Maintenance			
ASC #:		Date:	
ASC Name:			
ASC Certification Level:			
ASC Company:			
GDF Name:			
Address:			
City:		State:	ZIP Code:
GDF Contact Person Name:			
GDF Contact Person Title:			
GDF Contact Person Phone:			
GDF Contact Person E-mail:			
Notes			
Use the form on the following page to note details of Preventative Maintenance activities.			

12.2 Preventative Maintenance Checklist Form

Component	Frequency	Date Inspected	Completed	Required Action Items
PROCESSOR	Yearly			
• Inspect drive coupling on vacuum pump.			[]	
• Check the continuity of the heat trace cable.			[]	
RECIRCULATION BLOWER				
• Replace every 10 years or every 15,000 hours, whichever comes first.			[]	
VACUUM PUMP				
• Replace every 10 years or every 15,000 hours, whichever comes first.			[]	

In-Station Diagnostics (ISD)

Install, Setup, & Operation Manual

For VST ECS Membrane Processors and Veeder-Root Polisher

VEEDER-ROOT

Notice

Veeder-Root makes no warranty of any kind with regard to this publication, including, but not limited to, the implied warranties of merchantability and fitness for a particular purpose.

Veeder-Root shall not be liable for errors contained herein or for incidental or consequential damages in connection with the furnishing, performance, or use of this publication.

Veeder-Root reserves the right to change system options or features, or the information contained in this publication.

This publication contains proprietary information which is protected by copyright. All rights reserved. No part of this publication may be modified or translated to another language without the prior written consent of Veeder-Root.

Contact TLS Systems Technical Support for additional troubleshooting information at 800-323-1799.

DAMAGE CLAIMS / LOST EQUIPMENT

Thoroughly examine all components and units as soon as they are received. If any cartons are damaged or missing, write a complete and detailed description of the damage or shortage on the face of the freight bill. The carrier's agent must verify the inspection and sign the description. Refuse only the damaged product, not the entire shipment.

Veeder-Root must be notified of any damages and/or shortages within 30 days of receipt of the shipment, as stated in our Terms and Conditions.

VEEDER-ROOT'S PREFERRED CARRIER

1. Contact Veeder-Root Customer Service at 800-873-3313 with the specific part numbers and quantities that were missing or received damaged.
2. Fax signed Bill of Lading (BOL) to Veeder-Root Customer Service at 800-234-5350.
3. Veeder-Root will file the claim with the carrier and replace the damaged/missing product at no charge to the customer. Customer Service will work with production facility to have the replacement product shipped as soon as possible.

CUSTOMER'S PREFERRED CARRIER

1. It is the customer's responsibility to file a claim with their carrier.
2. Customer may submit a replacement purchase order. Customer is responsible for all charges and freight associated with replacement order. Customer Service will work with production facility to have the replacement product shipped as soon as possible.
3. If "lost" equipment is delivered at a later date and is not needed, Veeder-Root will allow a Return to Stock without a restocking fee.
4. Veeder-Root will NOT be responsible for any compensation when a customer chooses their own carrier.

RETURN SHIPPING

For the parts return procedure, please follow the appropriate instructions in the "General Returned Goods Policy" pages in the "Policies and Literature" section of the Veeder-Root **North American Environmental Products** price list. Veeder-Root will not accept any return product without a Return Goods Authorization (RGA) number clearly printed on the outside of the package.

INSTALLATION IN THE STATE OF CALIFORNIA

Please refer to the California Air Resources Board Vapor Recover Certification Phase II EVR Executive Order web site (*www.arb.ca.gov/vapor/eo-evrphaseII.htm*) for the latest manual revisions pertaining to VR 204 (VST Phase II EVR System Including ISD System).

WARRANTY

Please see next page, iii.

©Veeder-Root 2008. All rights reserved.

Warranty

ISD

WARRANTY POLICY

For ISD components (Vapor Flow Sensor, Vapor Pressure Sensor, and *NVMEM board*), the following warranty applies:

We warrant that this product shall be free from defects in material and workmanship and will comply with the performance standards of California EPA CP-201 section 10 as amended July 22, 2004 for a period of one (1) year from the date of ISD start-up or twenty-four (24) months from the date of invoice, whichever occurs first. During the warranty period, we and or our representative will repair or replace the product, if determined by us to be defective, at the location where the product is in use, at no charge to the purchaser.

For ISD components installed after the initial ISD start-up, we warrant that these products shall be free from defects in material and workmanship for a period of fifteen (15) months from date of invoice. We will repair or replace the product if the product is returned to us; transportation prepaid, within the warranty period, and is determined by us to be defective.

This warranty applies only when the product is installed in accordance with Veeder-Root's specifications, and that a Warranty Registration and Checkout Form has been filed with Veeder-Root by an authorized Veeder-Root Distributor. This warranty will not apply to any product which has been subjected to misuse, negligence, accidents, systems that are misapplied or are not installed per Veeder-Root specifications, modified or repaired by unauthorized persons, or damage related to acts of God.

Veeder-Root is not liable for incidental, consequential, or indirect damages or loss, including, without limitation, personal injury, death, property damage, environmental damages, cost of labor, clean-up, downtime, installation and removal, product damages, loss of product, or loss of revenue or profits. **THE WARRANTY CONTAINED HEREIN IS EXCLUSIVE AND THERE ARE NO OTHER EXPRESS, IMPLIED, OR STATUTORY WARRANTIES. WARRANTIES OF MERCHANTABILITY OR FITNESS FOR A PARTICULAR PURPOSE ARE EXPRESSLY EXCLUDED.**

1 Introduction

Site Requirements 1
Supported Vapor Recovery Systems 2
Contractor Certification Requirements 2
Related Manuals 2
Safety Precautions 3
Example Site Diagrams 3

2 Installation

Vapor Flow Meter 5
Vapor Pressure Sensor 5
Installing TLS Console Modules - General Notes 5
Circuit Directory 6
Smart Sensor Interface Module 7
NVMEM203 Board 7
Site Shut Down Requirements 7
Dispenser Interface Module (DIM) 7
Probe Interface Module 7
I/O Combination or 4-Relay Module 7
Multi-port Card for Vapor Processor Communication 8
TLS Console with V-R Vapor Polisher 8
TLS Console with VST ECS Membrane Processor 8

3 Setup

Introduction 10
Alarm Setups 10
Smart Sensor Setup 11
ATM Pressure Sensor Setup 12
EVR/ISD Setup 13
Output Relay Setup - VST ECS Membrane Processor 17
PMC Setup for VST ECS Membrane Processor 18
Alarm Setup 19
Introduction 19
Alarm Setup for Sites with Line Leak Detection 20
Alarm Setup for Sites without Line Leak Detection 22

4 ISD Operability Test Procedure

Vapor Pressure Sensor Verification Test 24
Principle and Summary of Test Procedure 24
Biases and Interferences 24
Range and Accuracy 25
Equipment 25
Calibration Requirements 25
Determining UST Pressure 25
Determining Ambient Pressure 26
Alternate Procedures 26
Vapor Flow Meter Operability Test 29
EQUIPMENT 29
PRE-TEST PROCEDURES 32
TEST PROCEDURES 33
POST-TEST PROCEDURES 34
Site Shutdown Test 34
Veeder-Root Vapor Polisher Operability Test 34

5 Operation

Alarms 35
Overview of TLS console Interface.....35
Warning Posting 35
Alarm Posting 36
Site Reenable.....36
Alarm Logs 37
Alarm Sequence.....38
ISD Alarm Summary 38
Other Alarms 40
Reports 41
Viewing ISD Reports 42
Viewing ISD Reports via RS-232 Connection 46
Connecting Laptop to Console 46
Connecting Laptop to Console 47
Sending Console Commands.....49

6 Maintenance

TLS Console 57
Air Flow Meter 57
Vapor Pressure Sensor 57

7 Diagnostic Menus

Smart Sensor Diagnostic Menu 58
ISD Diagnostic Menu 59
VST ECS Membrane Processor Diagnostic Menu 61
Veeder-Root Vapor Polisher Diagnostics 61
Automatic Control.....61
Manual control.....61
Veeder-Root Vapor Polisher PMC Diagnostic Menu 62

Appendix A: Site EVR/ISD Equipment Location Worksheet

Appendix B: ISD Operability Test Procedure Data Forms

Figures

Figure 1. Example Site Diagram - TLS Console Controlled Vapor Processor 4
Figure 2. TLS console Interface Module Bays 6
Figure 3. V-R Vapor Polisher Connections to TLS Console 8
Figure 4. VST ECS Membrane Processor Connections to TLS Console 9
Figure 5. Smart Sensor Setup 11
Figure 6. Smart Sensor Setup Printout Example 11
Figure 7. EVR/ISD Setup 1 13
Figure 8. EVR/ISD Setup 2 14
Figure 9. EVR/ISD Setup 3 15
Figure 10. Example VST ECS Printout 16
Figure 11. Output Relay Setup for VST ECS Membrane Processor 17
Figure 12. Output Relay Setup Printout Examples for TLS Console Controlled Processor 17
Figure 13. PMC Setup - VST ECS Membrane Processor 18
Figure 14. Site Tank Control Examples 19
Figure 15. Assigning ISD Shut Down Alarms in Line Leak Disable Setup 20

Figure 16. Example Line leak Disable Setup Printout 21
Figure 17. Assigning ISD Shut Down Alarms in Output Relay Setup 22
Figure 18. Example printout - ISD Alarms Assignments - Output Relay Setup.....23
Figure 19. Typical modified vapor adaptor dust cap (bottom view) 27
Figure 20. Typical field installation of UST Pressure Measurement Assembly 27
Figure 21. Vapor pressure sensor valve positions 28
Figure 22. Accessing the vapor pressure sensor reading 29
Figure 23. VST Surrogate Spout Assembly 30
Figure 24. Vapor Flow Meter Test Assembly 31
Figure 25. TLS console alarm interface 35
Figure 26. Example Warning posting 36
Figure 27. Example Alarm posting 36
Figure 28. ISD Alarm Override Procedure 37
Figure 29. Printing ISD Reports on Console Printer 42
Figure 30. ISD Status Report Example - TLS console printout 43
Figure 31. ISD Daily Report Example - TLS console printout 44
Figure 32. ISD Monthly Report Example - TLS console printout 45
Figure 33. Connecting laptop to TLS console for serial communication 46
Figure 34. Connection Description window 47
Figure 35. Connect To window 47
Figure 36. Console comm port settings prinout example 48
Figure 37. HyperTerminal main window 49
Figure 38. ISD Daily Report Details - Serial to PC Format 51
Figure 39. ISD Monthly Status Report - Serial to PC Format 52
Figure 40. ISD Alarm Status Report - Serial to PC Format 53
Figure 41. VST Vapor Processor Runtime Diagnostics Report - Serial to PC Format 54
Figure 42. V-R Vapor Polisher Runtime Diagnostics Report - Serial to PC Format 54
Figure 43. Vapor Valve Status Report - Serial to PC Format 55
Figure 44. Smart Sensor Sub Alarm History Report - Serial to PC Format 56
Figure 45. PMC Daily Vapor Polisher Diagnostic Report - Serial to PC Format 56
Figure 46. Smart Sensor Diagnostic Menu 58
Figure 47. ISD Diagnostic Menu 59
Figure 48. VST ECS Membrane Processor Diagnostic Menu 61
Figure 49. PMC Diagnostic Menus 62

Tables

Table 1. Vapor Recovery System 2
Table 2. Related Manuals 2
Table 3. ISD Alarm Summary 38
Table 4. Other Alarms 40
Table 5. Serial Commands for ISD Alarm, Monthly, and Daily Reports 50
Table 6. Vapor Processor Runtime Diagnostic Report Event Codes 55
Table 7. Clear Test Repair Menu 60

1 Introduction

In-Station Diagnostic (ISD) equipment is designed to monitor the collection and containment of vapors by vapor recovery equipment. The ISD software monitors the vapor recovery equipment using the Veeder-Root (V-R) TLS console platform, sensor inputs, and dispenser fuel events. ISD provides test reports, generates alarms following test/equipment failures, and finally, shuts down the site upon the occurrence of designated alarms.

This manual provides instructions to install, setup, and operate the special components of the Veeder-Root ISD system that are not covered in existing documentation shipped with other non-ISD specific V-R equipment (e.g., Mag probes, line leak detection, etc.). The ISD feature is an option for the TLS console platform, and as such, many of the installation/setup/operation instructions for non-ISD specific tasks (e.g., line leak detection) are covered in TLS-3XX supplied literature.

WARNING! Revision or reprogramming of the TLS may require notification of the local Certified Unified Program Agency (CUPA).

Site Requirements

Below are the requirements for all vapor recovery systems except where noted.

- V-R TLS-350R/EMC w/BIR, TLS-350 Plus/EMC Enhanced, TLS-350/EMC and Red Jacket ProMax consoles with ECPUII - install as per TLS-3XX Site Prep manual, setup following instructions in TLS-3XX System Setup Manual.
- A flash memory board (NVMEM203) for ISD software storage - installed on the ECPU2 board in place of the console's 1/2 Meg RAM board - install as per TLS-350 Series Board and Software Replacement Manual, no setup required.
- An available RS-232 module is required for RS-232 access to ISD reports - install as per instructions shipped with module, connect to the port using instructions in this manual.
- An output relay is required (either 4-Output Relay module, I/O Combination module) to shut down each Submersible Turbine Pump (STP) upon activation of certain ISD alarms (these alarms can also be assigned in Line Leak Disable setup to shut down the STP if Line Leak detection feature is installed) - install as per instructions shipped with module or line leak system, setup ISD shut down alarms either using output relays or line leak system following instructions in this manual. Two output relays on either of these two modules are also required for vapor processor motor control - install as per instructions in this manual.
- Dispenser Interface module (DIM) for the type of dispensers installed - install as per installation manual shipped with device, setup following instructions in DIM manual and TLS-3XX Setup Manual. Note: the DIM supplies flow meter event inputs needed for ISD analysis.
- One V-R Mag probe in each of the gasoline tanks being monitored - install as per installation manual shipped with device, setup following instructions in TLS-3XX Setup Manual.
- Smart Sensor module is required to monitor Air Flow Meters and Vapor Pressure Sensor (up to 8 devices per module, or 7 if customer is using SmartSensor module / embedded pressure). Install and connect following instructions in the Air Flow Meter and Vapor Pressure Sensor installation Guides.
- Air Flow Meters (one for each dispenser) - install as per ISD Flow Meter installation manual shipped with meter, setup following instructions in this manual. Also referred to as Vapor Flow Meters within this manual.
- Vapor Pressure Sensor (one per site) - install as per ISD Pressure Sensor installation manual shipped with sensor, setup following instructions in this manual.
- When monitoring a VST ECS membrane processor a Multi-port controller module is required.

Supported Vapor Recovery Systems

Table 1 lists V-R supported vapor recovery system.

Table 1. Vapor Recovery System

Name	CARB Executive Order
VST Phase II EVR System including ISD	VR-204

Contractor Certification Requirements

Veeder-Root requires the following minimum training certifications for contractors who will install and setup the equipment discussed in this manual:

Installer (Level 1) Certification: Contractors holding valid Installer Certification are approved to perform wiring and conduit routing; equipment mounting; probe, sensor and carbon canistor vapor polisher installation; tank and line preparation; and line leak detector installation.

TLS-350 Technician (Level 2/3 or 4) Certification: Contractors holding valid TLS-350 Technician Certifications are approved to perform installation checkout, startup, programming and operations training, troubleshooting and servicing for all Veeder-Root TLS-300 or TLS-350 Series Tank Monitoring Systems, including Line Leak Detection and associated accessories.

In-Station Diagnostics (ISD-PMC) Technician Certification: ISD PMC Contractors holding a valid ISD/PMC Certification are approved to perform (ISD/PMC) installation checkout, startup, programming, and operations training. This training also includes troubleshooting and service techniques for the Veeder-Root In-Station Diagnostics system. A current Veeder-Root Technician Certification is a prerequisite for the ISD/PMC course.

Veeder-Root ISD/PMC Including Carbon Canister Vapor Polisher Contractor Certification: This Certification includes Executive Orders 203, 204 and the Veeder-Root Vapor Polisher. This certification is required for setup and service of the Veeder-Root Vapor Polisher.

Warranty Registrations may only be submitted by selected Distributors.

Related Manuals

The manuals in Table 2 below are shipped with the equipment on the V-R Tech Docs CD-ROM and will be needed to install related equipment.

Table 2. Related Manuals

V-R Manual	Part Number
TLS-3XX Site Prep Manual	576013-879
ISD Balance Flow Meter Installation Guide	VR-204 IOM/ Section 18
Pressure Sensor Installation Guide	VR-204 IOM/ Section 17
TLS-3XX Series Consoles System Setup Manual	576013-623
TLS-3XX Series Consoles Operator's Manual	576013-610
Serial Comm Modules Installation Guide	577013-528
ISD Troubleshooting Manual	577013-819
TLS-350 Series Board and Software Replacement Manual	576013-637

Table 2. Related Manuals

V-R Manual	Part Number
TLS-350R Point-of-Sale (POS) Application Guide	577013-401

Safety Precautions

The following symbols may be used throughout this manual to alert you to important safety hazards.

	ELECTRICITY High voltage exists in, and is supplied to, the device. A potential shock hazard exists.		**TURN POWER OFF** Live power to a device creates a potential shock hazard. Turn Off power to the device and associated accessories when servicing the unit.
	READ ALL RELATED MANUALS Knowledge of all related procedures before you begin work is important. Read and understand all manuals thoroughly. If you do not understand a procedure, ask someone who does.		

⚠ WARNING

The console contains high voltages which can be lethal. It is also connected to low power devices that must be kept intrinsically safe.

Turn power Off at the circuit breaker. Do not connect the console AC power supply until all devices are installed.

Touching a live circuit can cause electrical shock that may result in serious injury or death.

Example Site Diagrams

Figure 1 shows an example site with a VST ECS membrane vapor processor.

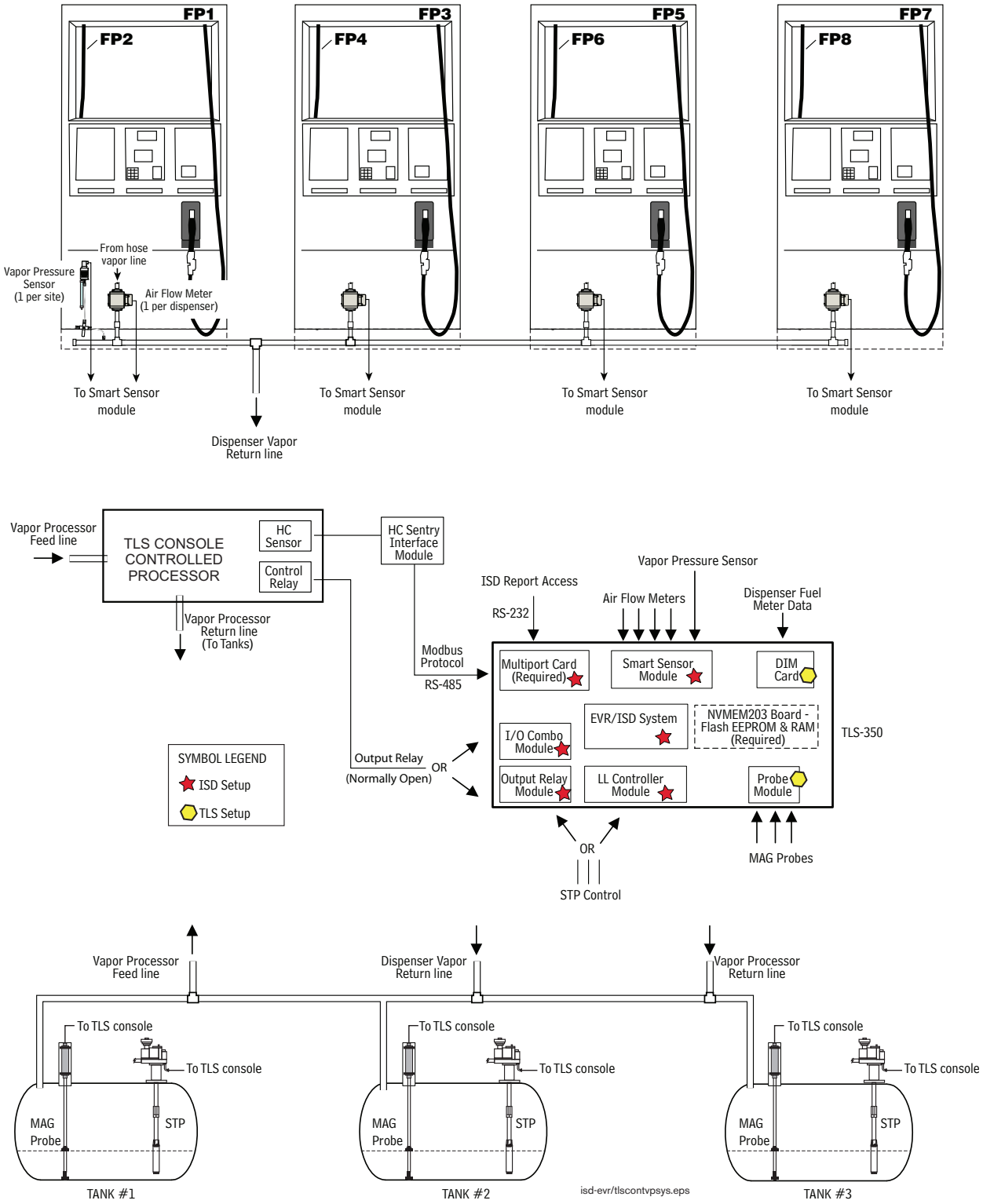

Figure 1. Example Site Diagram - TLS Console Controlled Vapor Processor

2 Installation

This section discusses the installation and wiring of the hardware required to enable the TLS console to perform ISD monitoring of the site's gasoline vapor recovery equipment (non-gas tanks are not monitored):

- Vapor Flow Meter
- Vapor Pressure Sensor
- Smart Sensor Interface Module (8 input and 7 input w/embedded pressure versions)
- NVMEM203 board - required
- 4-Relay Output Module or I/O Combination Module
- Line Leak Detection
- Dispenser Interface Module
- Probe Interface Module
- Multi-port Card (for VST ECS Membrane Processor only)

All field wiring, its type, its length, etc., used for TLS console sensors must conform to the requirements outlined in the Veeder-Root TLS-3XX Site Prep manual (P/N 576013-879).

Vapor Flow Meter

Install one Vapor Flow Meter in the vapor return piping of each gasoline dispenser following the instructions in the ISD Balance Flow Meter Installation guide (VR-204 IOM / Section 18). Program the meter following instructions in this manual.

Vapor Pressure Sensor

Install one Vapor Pressure Sensor in the vapor return piping of the gasoline dispenser closest to the tanks following the instructions in the Pressure Sensor Installation guide VR-204 IOM / Section 17). Program the meter following instructions in this manual.

Installing TLS Console Modules - General Notes

TLS consoles have three bays in which interface modules can be installed; Comm bay (left door) and Power and Intrinsically-Safe bays (right door). Smart Sensor modules are installed in the Intrinsically-Safe (I.S.) bay only (Figure 2).

Most consoles will be shipped with modules installed as ordered. If additional features are added at a later date, modules will be field installed.

In all cases, the position of the modules, their respective connectors and the devices wired to the connectors must be recorded to prevent improper replacement during installation or service. A circuit directory for Power and I.S. bay Interface Modules is adhered to the back of the right-hand door for this purpose.

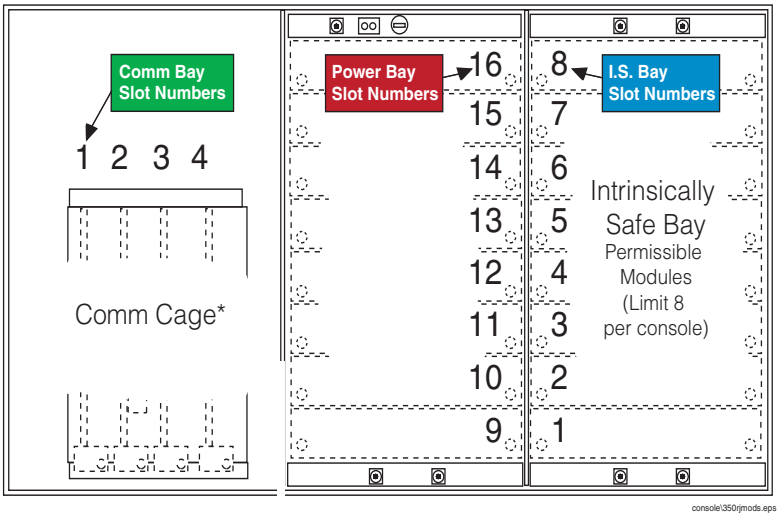

Figure 2. TLS console Interface Module Bays

CAUTION! During programming, module positions and the devices wired to each module are identified and stored in memory. If a connector is removed and reinstalled on a different module after programming, or if an entire module with its connector is removed and reinstalled in a different module slot, the system will not properly recognize the data being received.

Module Position

1. Record on the circuit directory the type of module in each slot location.
2. If a system contains multiple modules of a single type (i.e., two Smart Sensor Modules), they may be swapped between their respective slot locations, however, the connectors must remain with their original locations, not with the original modules.

Connector Position

1. Identify all connectors according to their slot location using the self-adhesive numbering labels furnished with each module. Accurately record on the circuit directory the location of each device wired to the connector as you attach wires to the module.
2. Once a device has been wired to certain terminals on a connector and the system has been programmed, the wires from that device may not be relocated to other terminals without reprogramming the system.

Grounding Probe and Sensor Shields

Connect probe and sensor cable shields to ground at the console only. Do not ground both ends of the shield.

CIRCUIT DIRECTORY

A circuit directory is adhered to the inside of the right-hand door. It should be filled out by the installer as the module's connectors are being wired.

The following information should be recorded for each slot:

- Module Type: record what type of module has been installed in the slot, e.g., Smart Sensor Module.
- Position Record: record the physical location and/or type of device wired to each terminal of the module connector in the slot, e.g., AFM1.

Smart Sensor Interface Module

The Smart Sensor Interface Module 8 input or 7 input w/embedded pressure versions monitor Air Flow Meter (AFM) and Vapor Pressure Sensor (VPS) inputs.

Switch off power to the TLS console while you install modules and connect sensor wiring.

Open the right door of the console and slide the necessary Smart Sensor modules into empty I.S. Bay slots. Connect the field wiring from each of the sensors following instructions in the Air Flow Meter and Vapor Pressure Sensor manuals. Setup the Smart Sensor module(s) following instructions in this manual.

NVMEM203 Board

Verify that a NVMEM203 board is installed in the TLS console (ref. Figure 2-7 in the V-R TLS-3XX Series Consoles Troubleshooting Manual P/N 576013-818, Rev Q or later). This board contains flash EEPROM and RAM needed to run ISD software and store ISD reports. No setup is required.

Site Shut Down Requirements

Normal ISD operation requires TLS console control of the STP in each of the gasoline tanks. If the site has Wireless Pressure Line Leak Detection (WPLLD), Pressure Line Leak Detection (PLLD) or Volumetric Line Leak Detection (VLLD) for each tank, you can use the line leak disable setup to control the vapor recovery tanks (diesel tanks do not require shutdown). If the site does not have line leak detection for all vapor recovery tanks, you can use output relay setup to control each tank. In lieu of line leak detection, install the necessary modules (output relay) to control each gasoline tank.

Dispenser Interface Module (DIM)

Verify that a dispenser interface module (DIM) is installed in the TLS console communication bay (ref. Figure 2) and that it is designed to communicate with the type of gasoline dispensers installed at the site. The ISD software requires dispenser fuel flow meter data inputs. Reference TLS-350R Point-of-Sale (POS) Application Guide to select correct DIM card. Refer to the manual shipped with the DIM for installation instructions, refer to the TLS-3XX System Setup manual to program the DIM.

Probe Interface Module

Verify that a Probe Interface Module(s) is installed (Intrinsically-Safe bay) and that a Mag probe is in each gasoline tank and is connected to the module(s). Program the Mag probes following instructions in the TLS-3XX System Setup manual.

I/O Combination or 4-Relay Module

Connect the vapor processor motor control relay to two relays on either the 4-Relay or I/O Combination module as shown in Figure 4.

Multi-port Card for Vapor Processor Communication

A Multi-port card is needed for RS-485 communication with the TLS console and is required with VST ECS membrane processor installations. Verify that a Multi-port card is installed in slot 4 of the card cage in the communications bay of the TLS console (ref. Figure 4). When installing this card, refer to the V-R Serial Comm Modules Installation Guide (577013-528) for instructions. Connect this card to the vapor processor as shown in Figure 4. Program the card as instructed in this manual.

TLS Console with V-R Vapor Polisher

Figure 4 shows the interconnection wiring between a TLS console and a V-R Vapor Polisher.

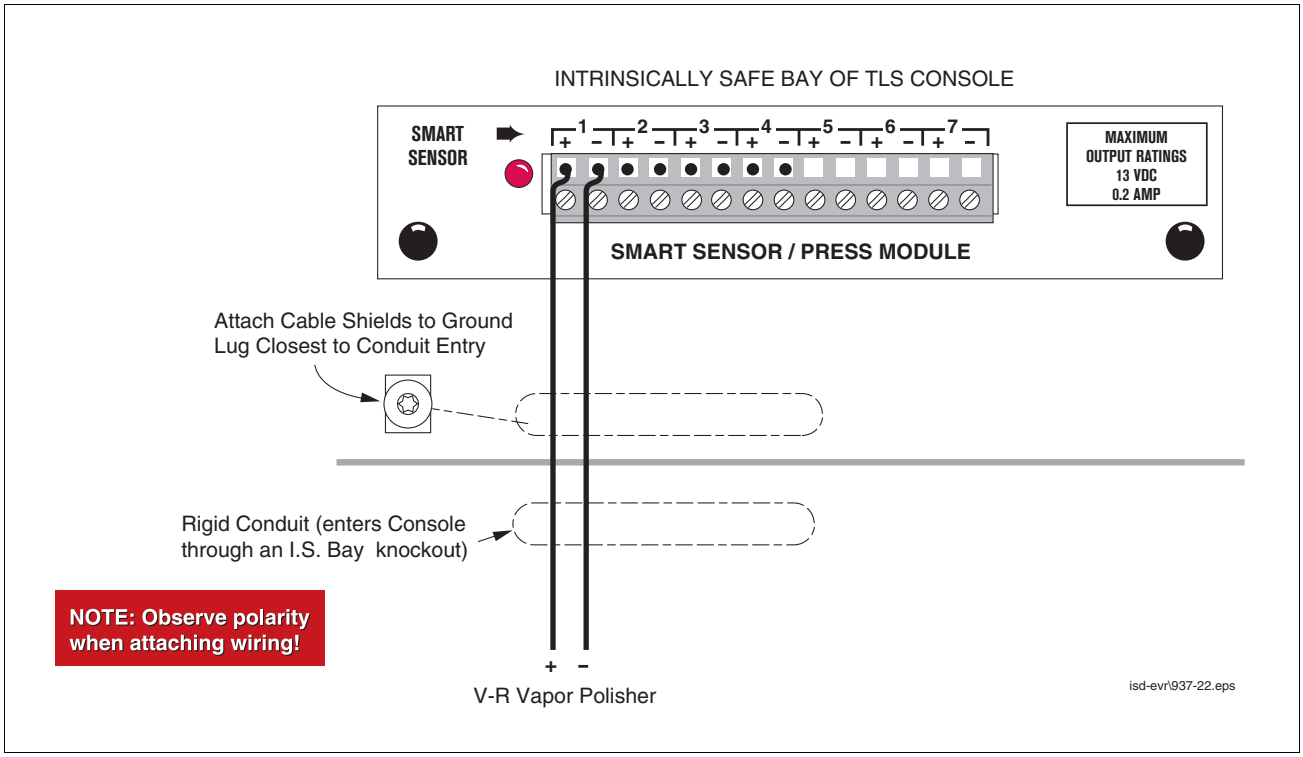

Figure 3. V-R Vapor Polisher Connections to TLS Console

TLS Console with VST ECS Membrane Processor

Figure 4 shows the interconnection wiring between a TLS console and a VST ECS Membrane Processor.

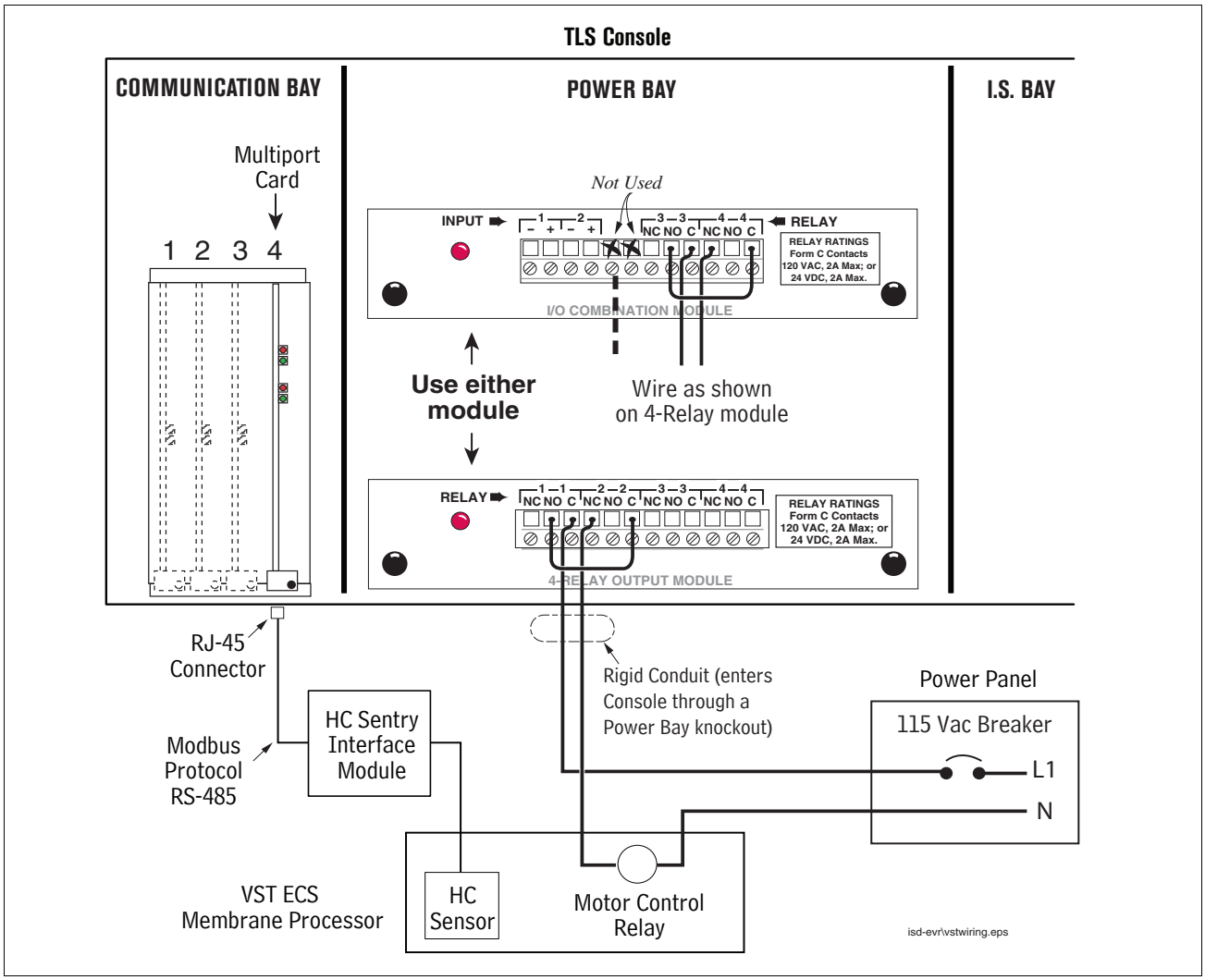

Figure 4. VST ECS Membrane Processor Connections to TLS Console

3 Setup

Introduction

This section describes how to program the ISD system using the TLS console's front panel buttons and display. The procedures in this manual follow standard TLS console setup programming input, i.e., keypad/display interaction. If necessary, refer to Section 2 of the TLS-3XX System Setup manual (P/N 576013-623) to review entering data via the front panel keypads.

All ISD-related equipment must be installed at the site and connected to the TLS console prior to beginning the setups covered in this section. As with all TLS connections, you cannot change sensor wiring or module slots after programming or the system will not recognize the correct data. Reference the section entitled "Connecting Probe/ Sensor Wiring to Consoles" in the TLS-3XX Site Prep and Installation manual (P/N 576013-879) for rewiring precautions.

ALARM SETUPS

One of two TLS setups below must be performed to shut down the tank should certain ISD alarms occur:

- For ISD sites with line leak detection - XLLD Line Disable Setup (go to Figure 15)

  This setup assigns ISD alarms to a line leak detector that will shut down the tank's STP.
- For ISD sites without line leak detection - Output Relay Setup (go to Figure 17)

  This setup assigns ISD alarms to a relay that will shut down the tank's STP.

Smart Sensor Setup

The Smart Sensor Interface Module is installed in the Intrinsically-Safe bay of the TLS console. This module monitors Air Flow Meters and the Vapor Pressure Sensor. Figure 5 diagrams the Smart Sensor setup procedure. Figure 6 shows a printout of the Smart Sensor setup.

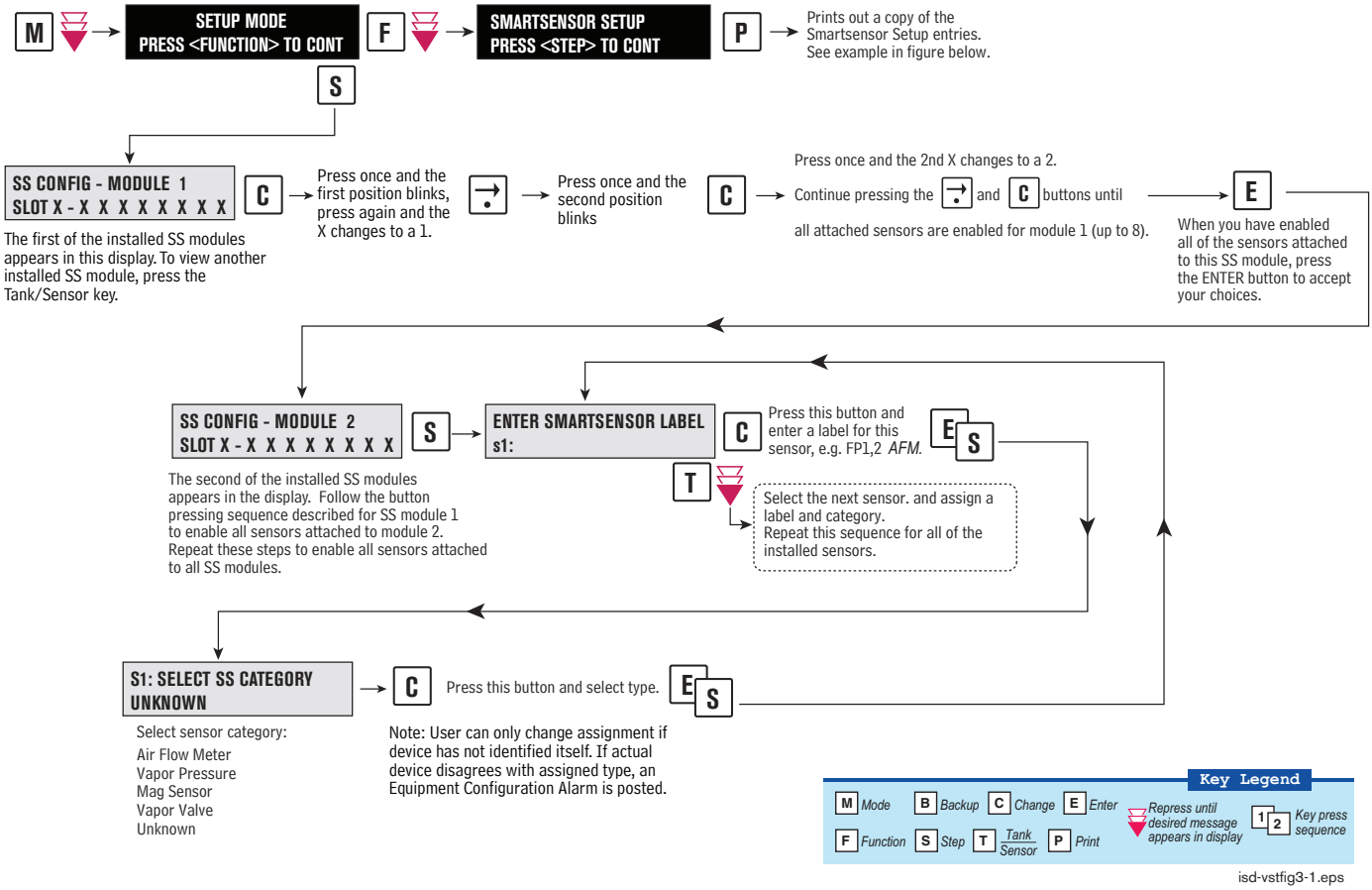

Figure 5. Smart Sensor Setup

```
SMARTSENSOR SETUP
---------------------

S01:FP 1  - 2
CATEGORY AIR FLOW METER

S02:VAPOR PRESSURE
CATEGORY VAPOR PRESSURE
```

isd-evr\sssetprt.eps

Figure 6. Smart Sensor Setup Printout Example

ATM Pressure Sensor Setup

The ATM Pressure Sensor is factory installed in the SmartSensor / Press module and preassigned to channel 8. At least one SmartSensor / Press module, which contains the ATM Pressure Sensor, must be installed in the console. You must configure at least one ATM Pressure Sensor for use by the Vapor Polisher or a PMC Set-up Fail will occur. NOTE: if more than one SmartSensor / Press module is installed, only one ATM Pressure Sensor needs to be configured.

Look in console and note the slot position of the SmartSensor / Press module. Enter the Setup Mode and press the FUNCTION key until you see the message:

SMARTSENSOR SETUP
PRESS <STEP> TO CONTINUE

Press STEP until you see the message:

SS CONFIG - MODULE *n*
SLOT *x* - X X X X X X X X

Where *x* is the slot number containing the SmartSensor / Press module. Press the → key to move the cursor to the last (8th) X. Press CHANGE and the message below should appear:

SLOT *x* - X X X X X X X 8
PRESS <STEP> TO CONTINUE

Press STEP:

ENTER SMARTSENSOR LABEL
s 8:

NOTE: In the example above, the ATM P sensor position is 8 but it could be16, 32, or 40 depending on the SmartSensor's module number.

Press CHANGE and enter a label:

ENTER SMARTSENSOR LABEL
s 8: (ATMP Sensor Label)

Press ENTER to accept your label:

s 8: (ATMP Sensor Label)
PRESS <STEP> TO CONTINUE

Press STEP:

s 8: SELECT SS CATEGORY
UKNOWN

Press CHANGE until you see the message:

s 8: SELECT SS CATEGORY
ATM P SENSOR

Press ENTER to accept the category. Press STEP, then BACKUP to return to the configuration display for Smart Sensor module 1:

SS CONFIG - MODULE 1 **SLOT *x* - X X X X X X X X**

This completes the ATM Pressure Sensor configuration.

EVR/ISD Setup

You must choose the appropriate data sheet from Appendix A for the vapor recovery system installed at your facility (e.g., Single or Multi-Hose Dispensers) and record in those sheets, all of the unique information from sensors/hose positions, prior to beginning the TLS EVR/ISD set up procedure below.

Figure 7 describes the first of the EVR/ISD setup programming diagrams.

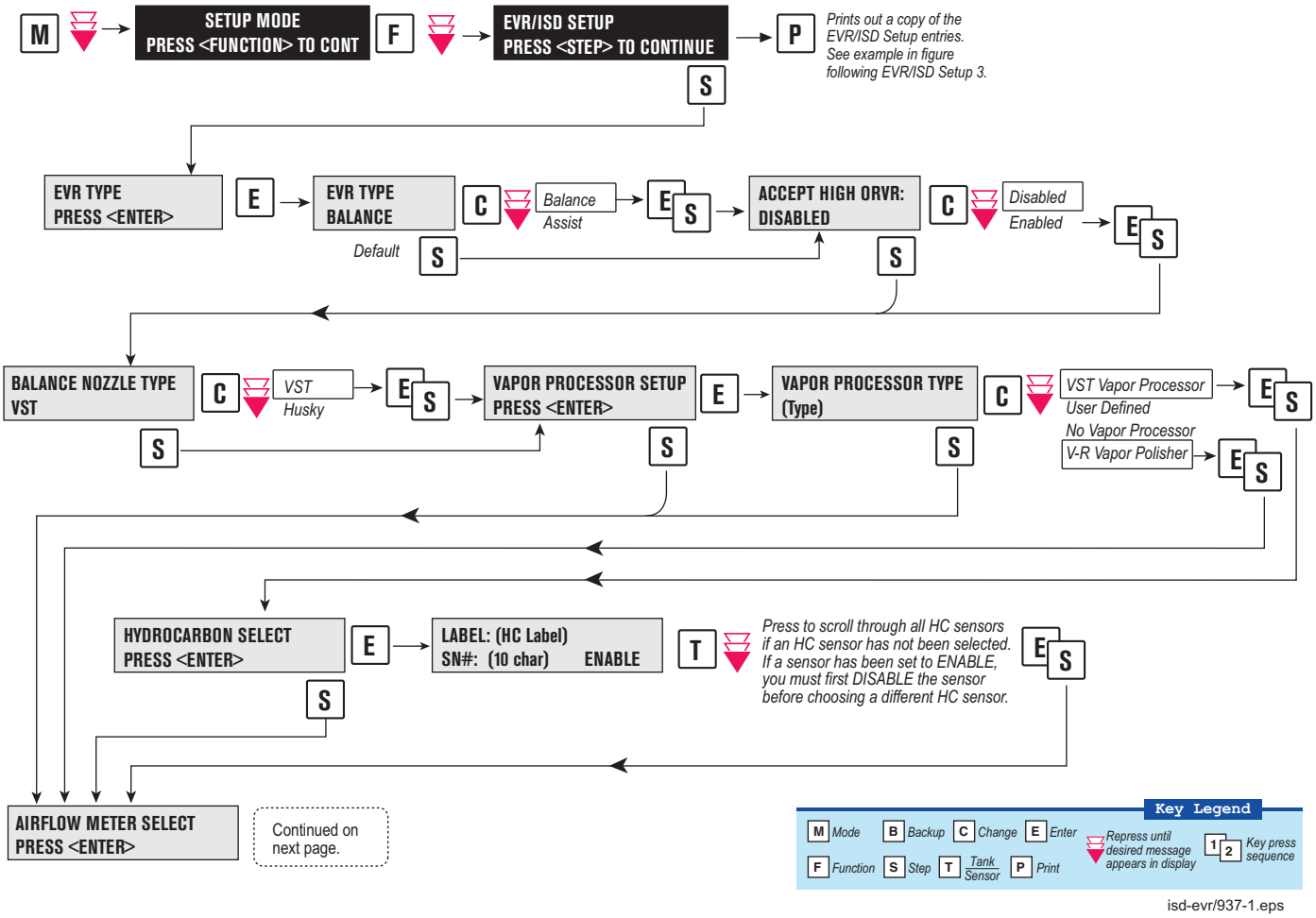

Figure 7. EVR/ISD Setup 1

Figure 8 describes the second of the EVR/ISD setup programming diagrams.

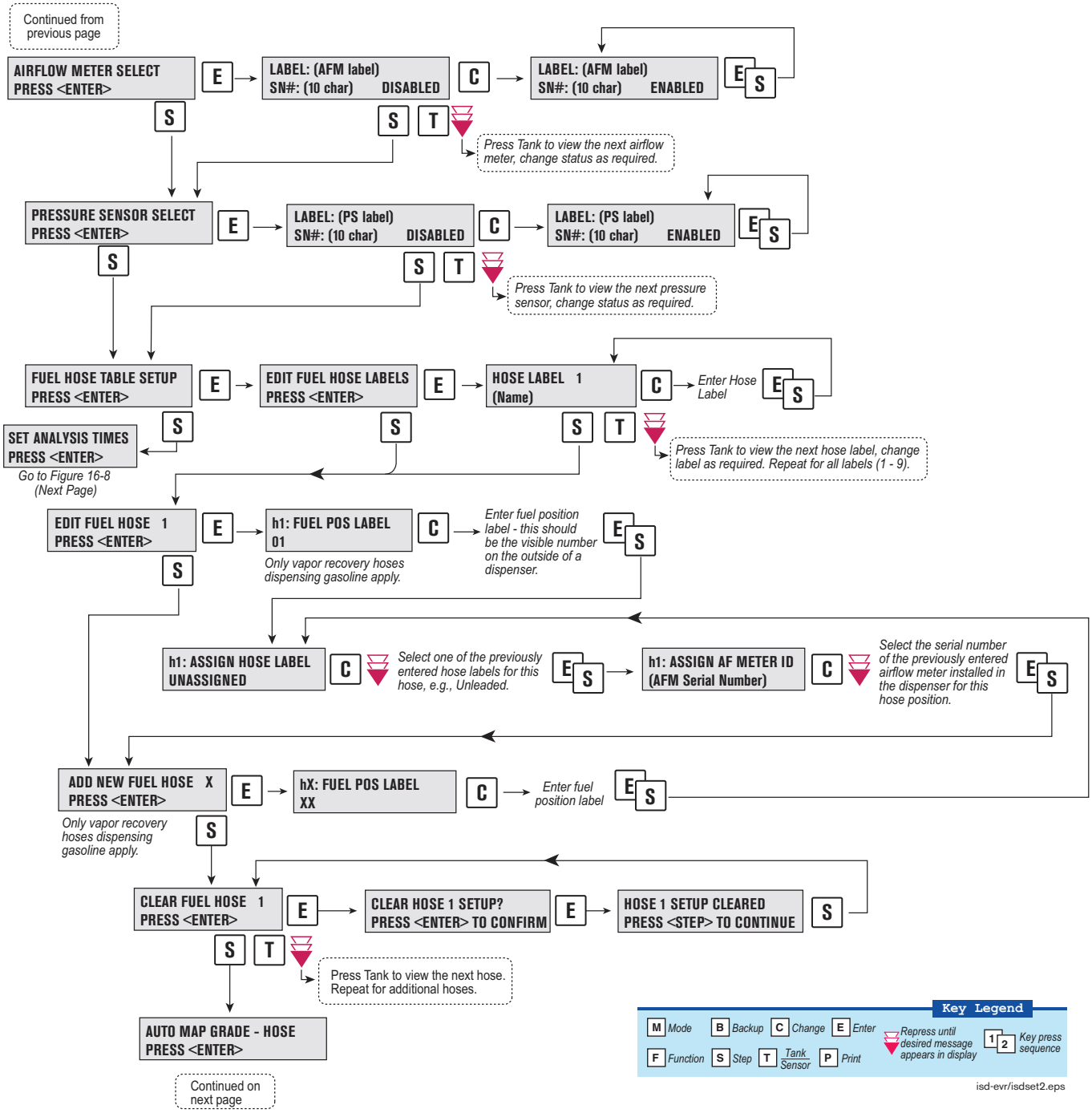

Figure 8. EVR/ISD Setup 2

Figure 9 describes the last of the EVR/ISD setup programming diagrams.

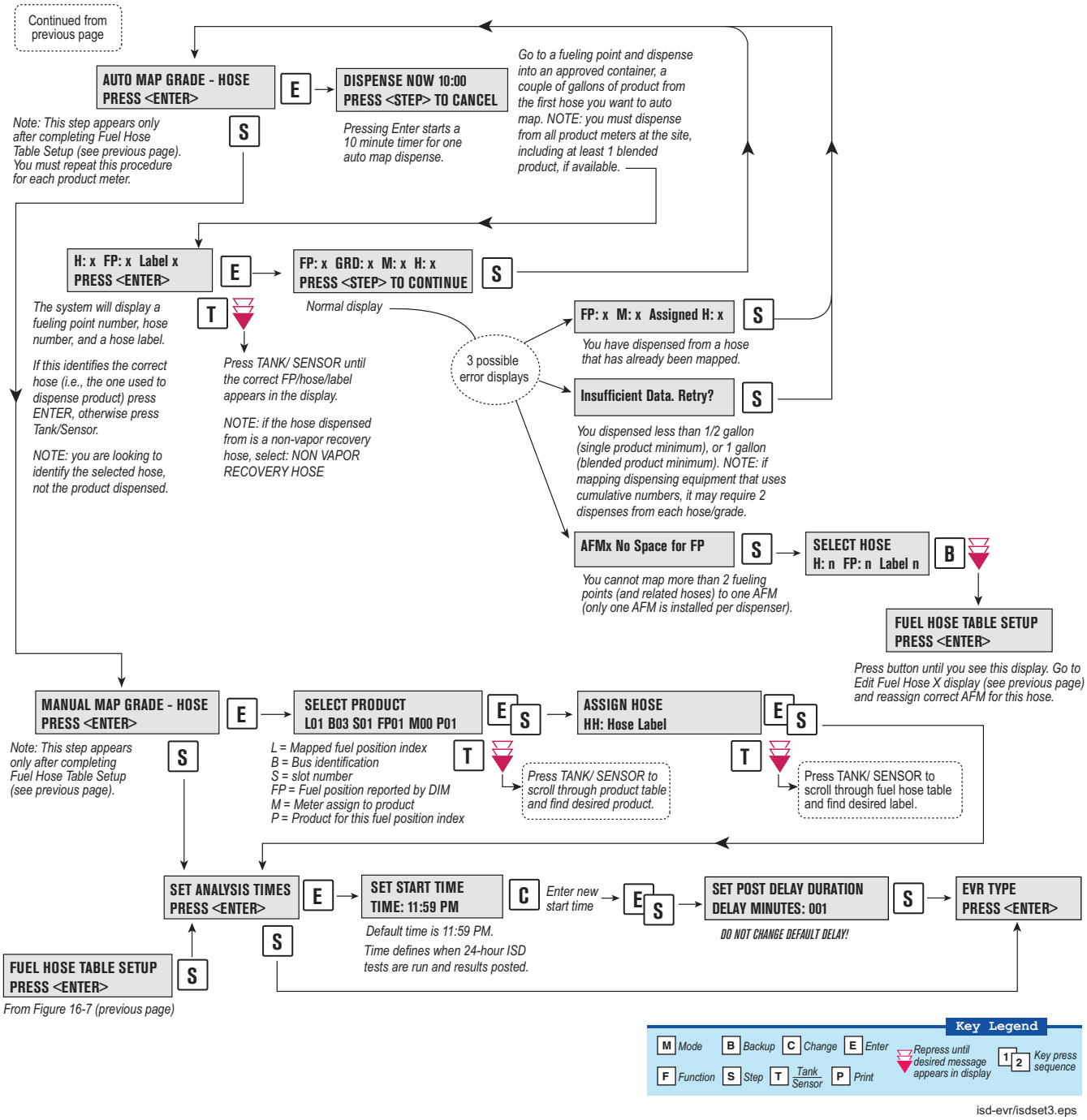

Figure 9. EVR/ISD Setup 3

```
EVR/ISD SETUP

EVR TYPE: BALANCE

BALANCE NOZZLE TYPE
VR/VST

VAPOR PROCESSOR TYPE
VEEDER-ROOT POLISHER

ANALYSIS TIMES
TIME: 11:59 PM
DELAY MINUTES: 1

ACCEPT HIGH ORVR:
DISABLED

ISD HOSE TABLE
ID  FP  FL  HL  AA  RR
------------------------
01  01  01  02  01  UU
02  02  02  02  01  UU
03  03  03  02  02  UU
04  04  04  02  02  UU
05  05  05  02  03  UU
06  06  06  02  03  UU
07  07  07  02  04  UU
08  08  08  02  04  UU
09  09  09  02  05  UU
10  10  10  02  05  UU
11  11  11  02  06  UU
12  12  12  02  06  UU
```

ID = Hose ID
FP = Mapped fuel position as TLS Console recognizes it (-1 = unassigned)
FL = Fuel position label as written on dispenser
HL = Hose label
AA = Airflow meter ID assigned
RR = Relay ID
UU = unassigned

```
ISD AIRFLOW METER MAP
ID SERIAL NUM LABEL
------------------------
 1 03001401   AFM1 FP1 -
 2 03001402   AFM2 FP3 -
 3 03001403   AFM3 FP5 -
 4 03001404   AFM4 FP7 -
 5 03001405   AFM5 FP9 -
 6 03001406   AFM6 FP11
```

ID = Airflow meter ID assigned
Serial Number = Airflow meter's serial number

```
ISD FUEL GRADE HOSE MAP
    1   2   3   4
FP MHH MHH MHH MHH AA
------------------------
01 101 301 901 U U  1
02 102 302 902 U U  1
03 103 303 903 U U  2
04 104 304 904 U U  2
05 105 305 905 U U  3
06 106 306 906 U U  3
07 107 307 907 U U  4
08 108 308 908 U U  4
09 109 309 909 U U  5
10 110 310 910 U U  5
11 111 311 911 U U  6
12 112 312 912 U U  6
```

FP = Mapped fuel position
M/H = Meter and hose for product X
AA = Airflow meter assigned to first (lowest X) product with meter and hose assigned (usually same for entire dispenser)
U = Unassigned
N = Not used by ISD

```
LABEL TABLE
------------------------
 1: UNASSIGNED
 2: BLEND3
 3: REGULAR
 4: MID GRADE
 5: PREMIUM
 6: GOLD
 7: BRONZE
 8: SILVER
 9: BLEND2
10: BLEND4
```

ID = Label ID
Label = User definable
00 = reserved, non-ISD

isd-evr/937-2.eps

Figure 10. Example VST ECS Printout

Output Relay Setup - VST ECS Membrane Processor

The Output Relay setup programs an output relay so that the TLS console can switch a controlled vapor processor on and off as shown in Figure 11.

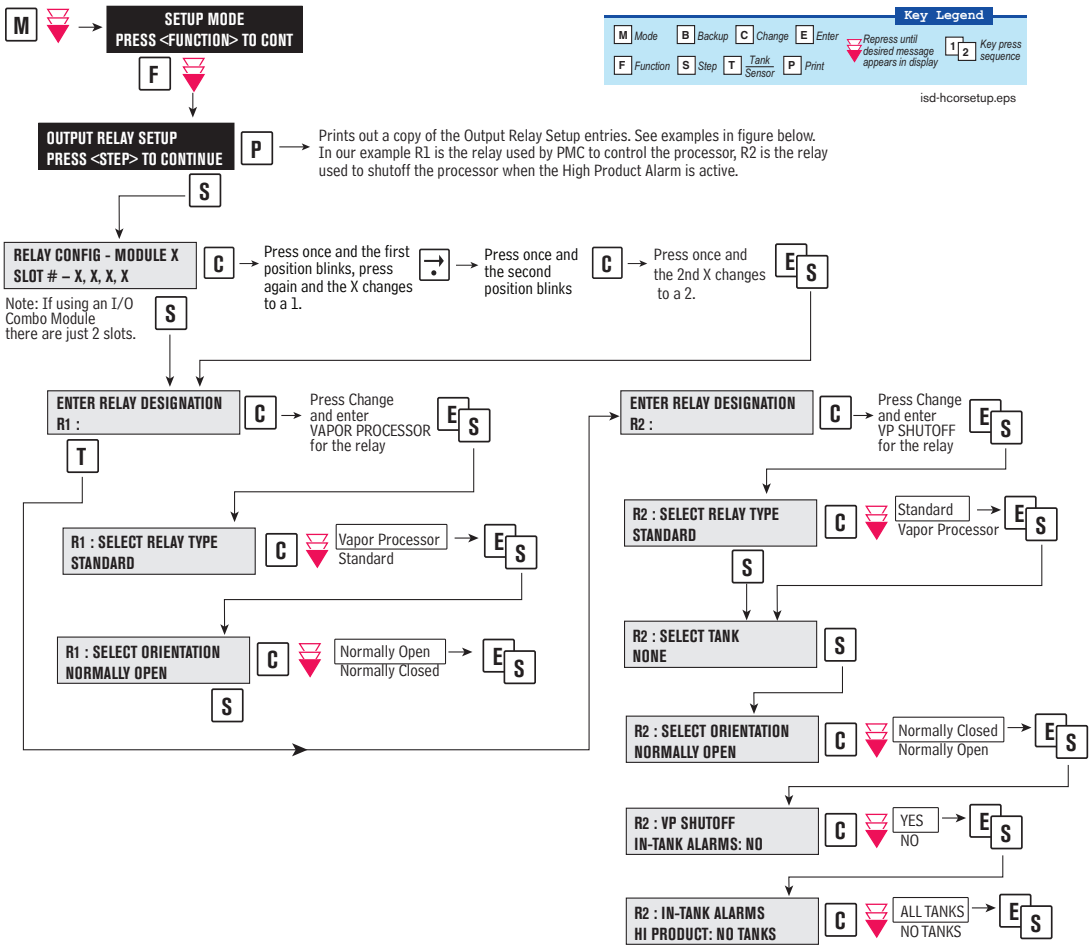

Figure 11. Output Relay Setup for VST ECS Membrane Processor

Figure 12 shows example setup printouts of the Output Relays setup.

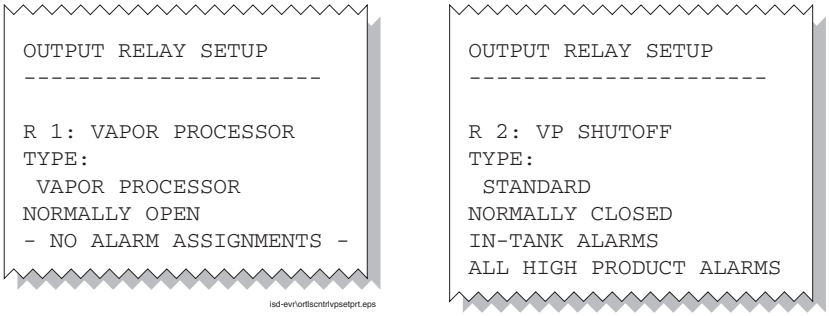

Figure 12. Output Relay Setup Printout Examples for TLS Console Controlled Processor

PMC Setup for VST ECS Membrane Processor

PMC setup allows you to select the maximum runtime and the start/stop pressure of TLS console controlled vapor processors (see Figure 13).

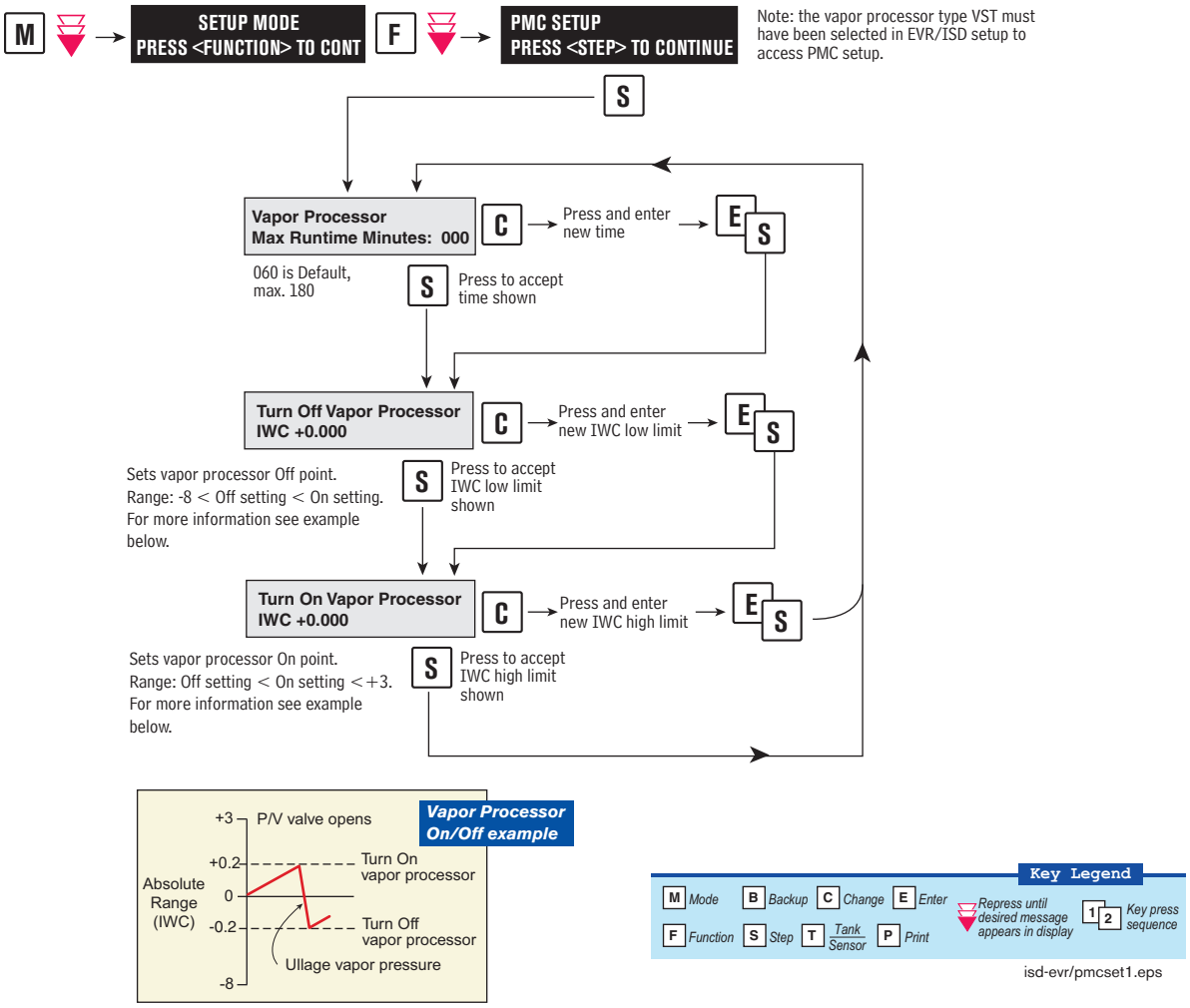

Figure 13. PMC Setup - VST ECS Membrane Processor

Alarm Setup

INTRODUCTION

California regulations (VAPOR RECOVERY CERTIFICATION PROCEDURE, CP-201, DATED MAY 25, 2006 CERTIFICATION PROCEDURE FOR VAPOR RECOVERY SYSTEMS AT GASOLINE DISPENSING FACILITIES, Sections 9.1.2) require shut down of dispensing systems that generate specific alarm conditions. To accomplish this, the TLS must be configured to control the gasoline tank's pump (diesel tanks are not monitored) in order to disable them when ISD shutdown alarm conditions occur. Prior to setting up ISD shut down alarms, you will need to determine how the site's tank pumps are controlled. If the site has line leak detection, you can shut down the line (tank) by assigning the ISD alarms in Line Leak Disable setup. In the absence of line leak detection, you can assign the ISD alarms to Output Relays which in turn can be wired to shut down the tank. Figure 14 illustrates two examples of tank pump control, one using a line leak/output relay combination and one using output relays.

EXAMPLE 1 - Line Leak Detector controls T1 and T3, Output Relay controls T2

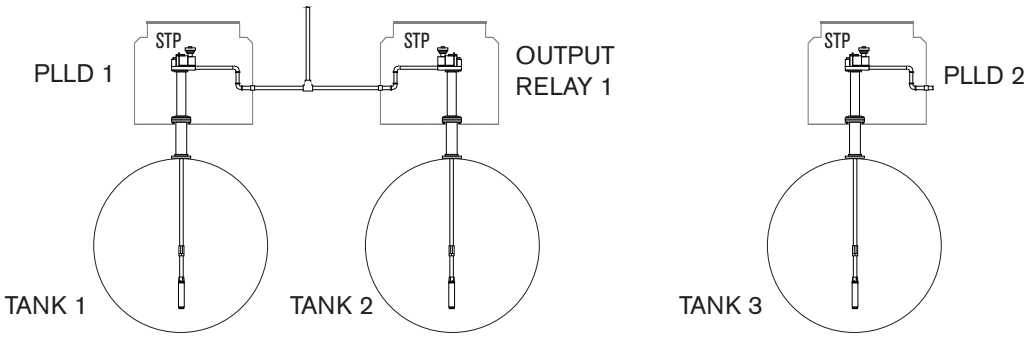

EXAMPLE 2 - Output Relay 1 controls T1, Output Relay 2 controls T2, etc.

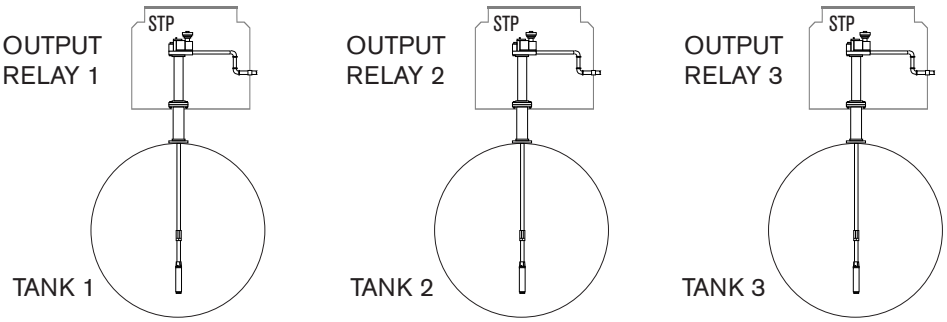

isd-evr/isdsetdia1.eps

Figure 14. Site Tank Control Examples

Referencing the figure above, in example 1, you would assign the ISD shut down alarms for tank 1 to PLLD 1 in PLLD Line Leak Disable setup, for tank 2 to a relay in Output Relay Setup, and for tank 3 to PLLD 2 in PLLD Line Leak Disable setup. In example 2, you would assign the ISD shut down alarms for tank 1 to output relay 1, tank 2 to output relay 2, and tank 3 to output relay 3.

ALARM SETUP FOR SITES WITH LINE LEAK DETECTION

Figure 15 illustrates the setup steps required to assign ISD Shut Down Alarms to a tank having a line leak detection system installed.

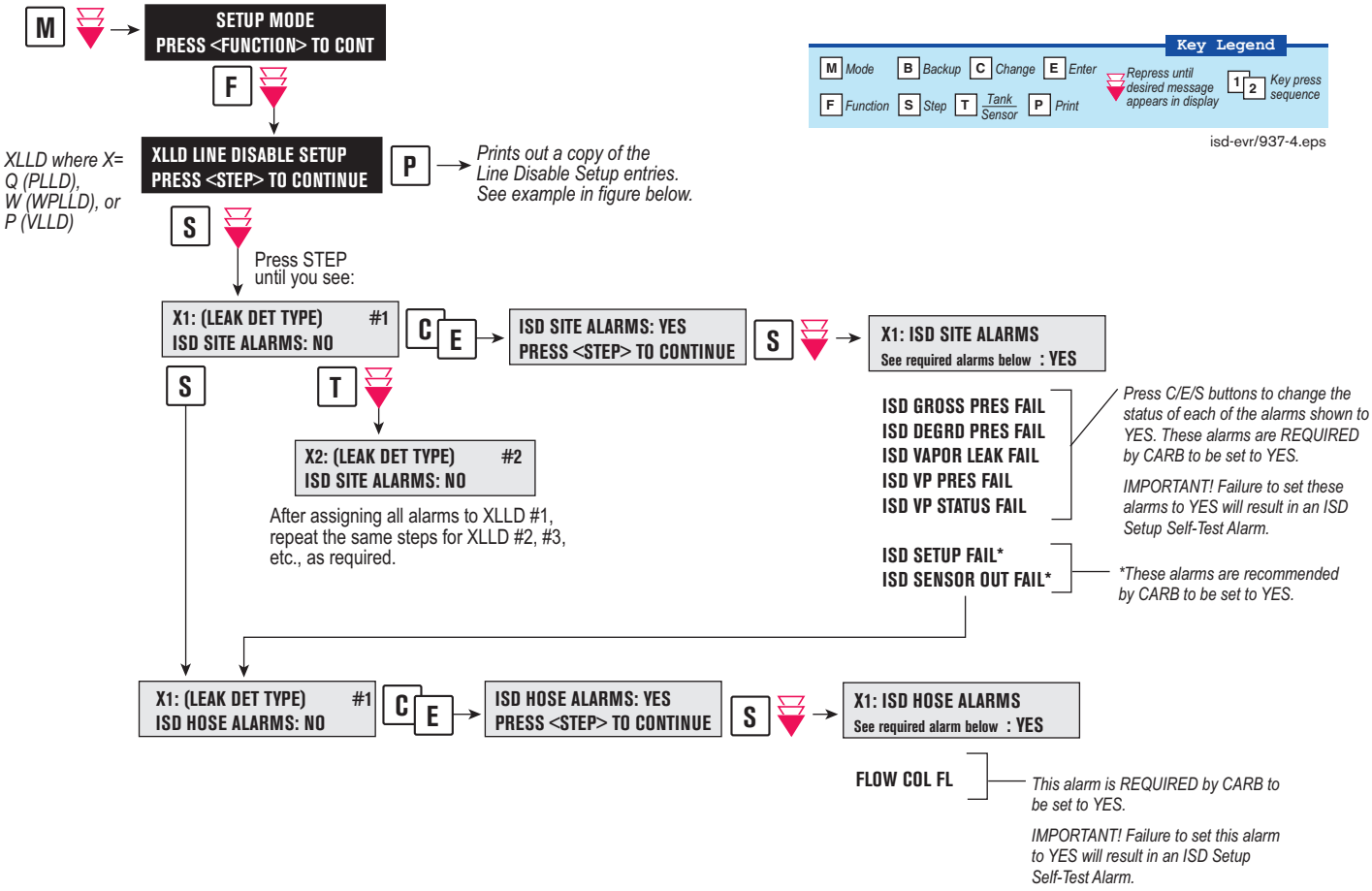

Figure 15. Assigning ISD Shut Down Alarms in Line Leak Disable Setup

Figure 16 shows a resulting printout of the Line Leak Disable setup with ISD alarms assigned.

```
PLLD LINE DISABLE SETUP
-----------------------

Q 1:UNLEADED

ISD SITE ALARMS
 ISD GROSS PRESSURE FAIL
 ISD DEGRD PRESSURE FAIL
 ISD VAPOR LEAKAGE FAIL
 ISD VP PRESSURE FAIL
 ISD VP STATUS FAIL
 ISD SETUP FAIL
 ISD SENSOR OUT FAIL

ISD HOSE ALARMS
 h1: FLOW COLLECT FAIL
```

isd-evr\937-5.eps

Figure 16. Example Line leak Disable Setup Printout

ALARM SETUP FOR SITES WITHOUT LINE LEAK DETECTION

Figure 17 illustrates the setup steps required to assign ISD Shut Down Alarms to a tank using either a Four Relay Output Module or an I/O Combination Module.

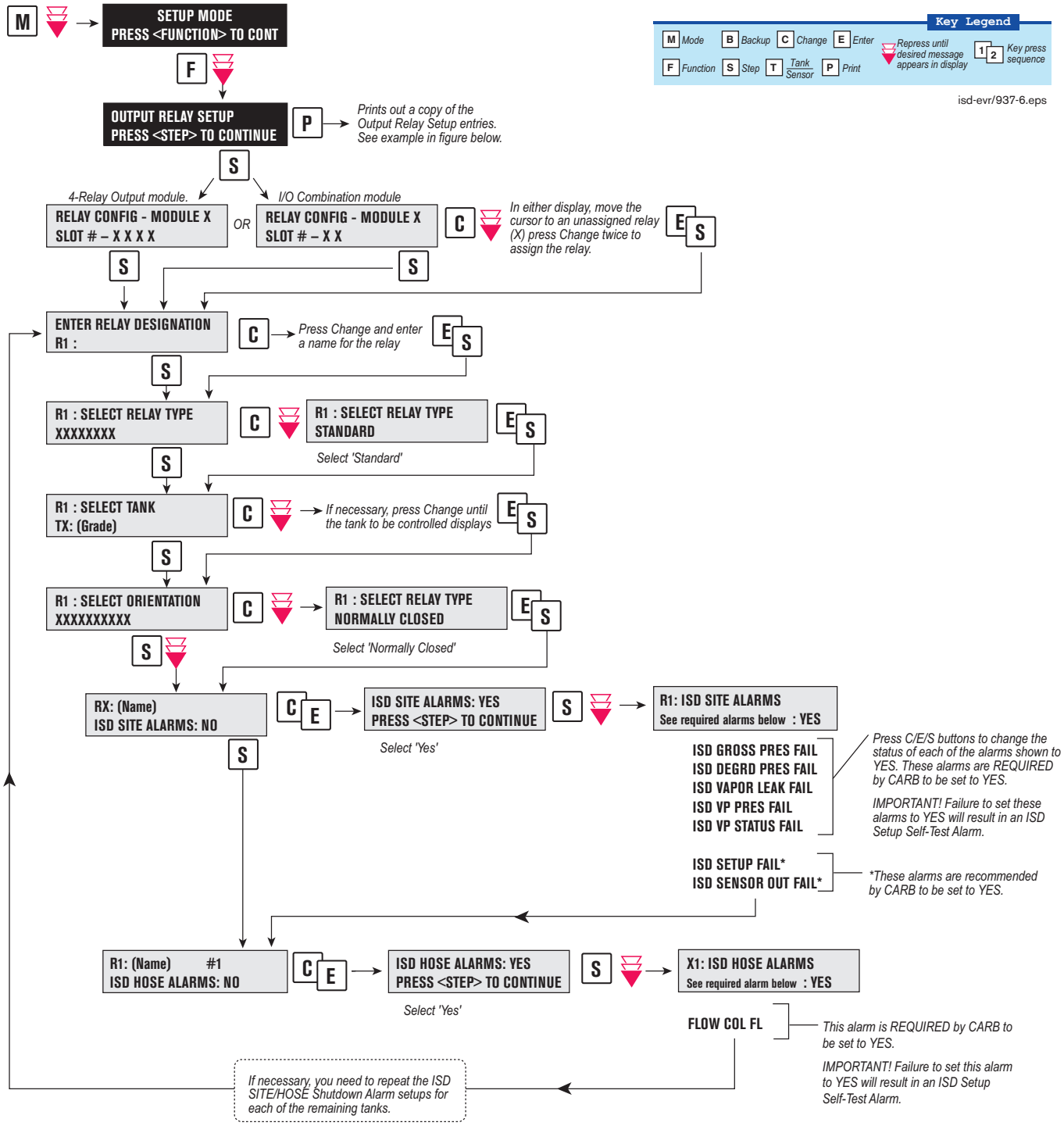

Figure 17. Assigning ISD Shut Down Alarms in Output Relay Setup

Figure 18 shows a resulting printout of the Output Relay setup with ISD alarms assigned.

```
OUTPUT RELAY SETUP
----------------------

R 1:(Input Name)
TYPE:
  STANDARD
NORMALLY CLOSED

ISD SITE ALARMS
 ISD GROSS PRESSURE FAIL
 ISD DEGRD PRESSURE FAIL
 ISD VAPOR LEAKAGE FAIL
 ISD VP PRESSURE FAIL
 ISD VP STATUS FAIL
 ISD SETUP FAIL
 ISD SENSOR OUT FAIL

ISD HOSE ALARMS
 h1: FLOW COLLECT FAIL
```

isd-evr\937-7.eps

Figure 18. Example printout - ISD Alarms Assignments - Output Relay Setup

4 ISD Operability Test Procedure

The following procedures shall be used at field sites to determine the operability of the Veeder-Root ISD system to satisfy the requirements documented in VAPOR RECOVERY CERTIFICATION PROCEDURE, CP-201, DATED MAY 25, 2006 CERTIFICATION PROCEDURE FOR VAPOR RECOVERY SYSTEMS AT GASOLINE DISPENSING FACILITIES. Testing the ISD equipment in accordance with this procedure will verify the equipment's operability for Vapor Containment Monitoring and Vapor Collection Monitoring.

Veeder-Root's TLS console ISD System Self-Test Monitoring algorithms are designed to verify proper selection, setup and operation of the TLS console modules and sensors and will not complete and report passing test results in the event of a failure of components used in the system. Completed ISD monitoring tests are evidence that:

- The system was properly powered for data collection
- All necessary ISD sensors were setup and connected
- All necessary ISD sensors were operating within specification
- All internal components including TLS console modules were properly setup and operating within specification

Veeder-Root recommends printing a copy of the ISD ALARM STATUS and ISD DAILY report (REF. Section 5, Operation of the ISD Install, Setup & Operation Manual) periodically to determine that compliance tests are being completed in accordance with local and state regulations.

A step-by-step worksheet for recording data from the following operability tests is provided in Appendix C.

Vapor Pressure Sensor Verification Test

PRINCIPLE AND SUMMARY OF TEST PROCEDURE

Determining UST Pressure

The pressure of the USTs is determined at the Phase I vapor recovery adaptor (dry break assembly) with a vapor coupler test assembly as shown in Figures 2 and 3 of TP-201.3 (Determination of 2 Inch WC Static Pressure Performance of Vapor Recovery Systems of Dispensing Facilities) or a modified dust cap test assembly as shown in Figure 19 and Figure 20. The test assembly is equipped with a center probe, which opens the dry break, and a quick connect fitting that is connected to an electronic pressure measuring device or digital manometer. The test assembly should open the dry break with minimal venting of the USTs. This test can be performed while product is being dispensed into motor vehicles.

Determining Ambient Pressure

The Vapor Pressure Sensor is subjected to ambient pressure by turning the Vapor Pressure Sensor valve, which is located in the dispenser closest to the tanks, to the Atmospheric Valve Position as shown in Figure 21. This test can be performed while product is being dispensed into motor vehicles.

BIASES AND INTERFERENCES

1. This test shall not be conducted within 30 minutes following gasoline transfer from a cargo tank.
2. This test shall not be conducted if the processor is operating (audible indication that the processor is running).

RANGE AND ACCURACY

Electronic Pressure Measuring Device such as a digital manometer

Minimum readability shall be 0.01 inches WC with measurement range(s) to include at least up to positive and negative ten (±10) inches WC with a minimum accuracy of plus or minus 0.05 inches WC of full scale.

EQUIPMENT

1. The dust cap test assembly shall be modified in the following manner:
   a. Install a probe in the center of the dust cap as shown in Figure 19 (one method is to tap and thread probe). The probe shall be of sufficient length to open approximately ½ inch of the dry break while allowing the cap to maintain a leak tight seal on the adaptor.
   b. Install female quick connect fitting on the top of the dust cap, offset from the center probe as shown in Figure 19. A Swagelok, part number SS-QC4-B-4-PM, quick connect fitting or equivalent can be used.
   c. Use "Tygon tubing" or equivalent to connect the manometer to the dust cap (Figure 20). Install a male quick connect fitting (Swagelok part number SS QC4-5-400 or equivalent can be used) on one end of a ferrule stainless steel tube (or equivalent material). Connect one end of the "Tygon tubing" to the stainless steel tube and connect the other end to the digital manometer (Figure 20).
2. Alternatively, the vapor coupler test assembly, Figures 2 and 3 of TP 201.3 may be used in lieu of the dust cap test assembly.
3. Digital Manometer (Electronic Pressure Measuring Device)

   Use a minimum range ±10.00 inches WC digital manometer to monitor the UST pressure with a minimum readability of 0.01 inches of WC. Dwyer Series 475 Mark III Digital manometer or equivalent can be used. A copy of the manufacturer's operating instructions shall be kept with the equipment.

CALIBRATION REQUIREMENTS

1. A copy of the most current calibration of the electronic pressure measuring device shall be kept with the equipment.
2. All electronic pressure measuring devices shall be bench tested for accuracy using a reference gauge, incline manometer or National Institute of Standards and Technology (NIST) traceable standard at least once every twelve (12) consecutive months. Accuracy checks shall be performed at a minimum of five (5) points (e.g., 10, 25, 50, 75 and 90 percent of full scale) each for both positive and negative pressure readings. Accuracy shall meet the requirements in the Range and Accuracy section above.

DETERMINING UST PRESSURE

Pre-Test Procedure

1. Turn on digital manometer and allow instrument to warm up for five minutes.
2. Zero out digital manometer using adjustment pod on top of instrument in accordance with manufacturer's instructions. Drift may be minimized by re zeroing immediately after use by venting both pressure ports to atmosphere and adjusting the knob until the display reads exactly zero.
3. Attach the male quick connect fitting to the female quick connect fitting on the modified vapor dust cap.
4. Attach digital manometer to open end of Tygon tubing.

Test Procedure

1. Attach the dust cap or vapor coupler test assembly to the vapor adaptor (Figure 20).
2. On the TLS Console front panel, use the 'mode key' to scroll to "DIAG MODE" then use the function and step keys, as shown in Figure 22 to view the current pressure value.
3. Simultaneously record the ullage pressure from the digital manometer (connected to the vapor coupler test assembly) and the TLS Console. Record the above information on Appendix C, Form 1 "Data Form for Vapor Pressure Sensor UST Pressure Test." Districts may require the use of an alternate form, provided it includes the same minimum parameters as identified in the Data Form.
4. Verify that the pressure reading from the TLS Console is within ±0.2 inches WC from the digital manometer reading. If difference is not within ±0.2 inches WC, the pressure sensor is not in compliance with the pressure sensor requirements.
5. Press the <MODE> key to leave the 'PMC DIAGNOSTIC' menu.

DETERMINING AMBIENT PRESSURE

Test Procedure for Testing Sensor Under Ambient Pressure

1. Access the Vapor Pressure Sensor, which is located in the dispenser closest to the tanks. Record which dispenser contains the pressure sensor and the pressure sensor serial number on the data form.
2. Remove the cap from the ambient reference port of the Vapor Pressure Sensor valve and open the valve to atmosphere by turning it 90 degrees so that the flow arrows point to both the Vapor Pressure Sensor sensing port and the ambient reference port (see Figure 21).
3. On the TLS Console front panel, use the 'mode key' to scroll to "DIAG MODE" then use the function and step keys, as shown in Figure 22 to view the current pressure value.
4. Verify that the pressure value is between +0.2 and -0.2 inches WC. If the pressure value is not within this range, the pressure sensor is not in compliance with the pressure sensor requirements.
5. Replace the cap on the ambient reference port of the Vapor Pressure Sensor valve. Restore the Vapor Pressure Sensor valve by turning it 90 degrees so that the flow arrows point to both the Vapor Pressure Sensor sensing port and the UST vapor space sensing line (ref. Figure 21).
6. Press the <MODE> key to leave the 'PMC DIAGNOSTIC' menu.
7. Record the above information on Appendix C, Form 2 "Data Form for Vapor Pressure Sensor Ambient Reference Test." Districts may require the use of an alternate form, provided it includes the same minimum parameters as identified in the Data Form.

ALTERNATE PROCEDURES

This procedure shall be conducted as specified. Any modifications to this test procedure shall not be used unless prior written approval has been obtained from the ARB Executive Officer, pursuant to Section 14 of CP-201.

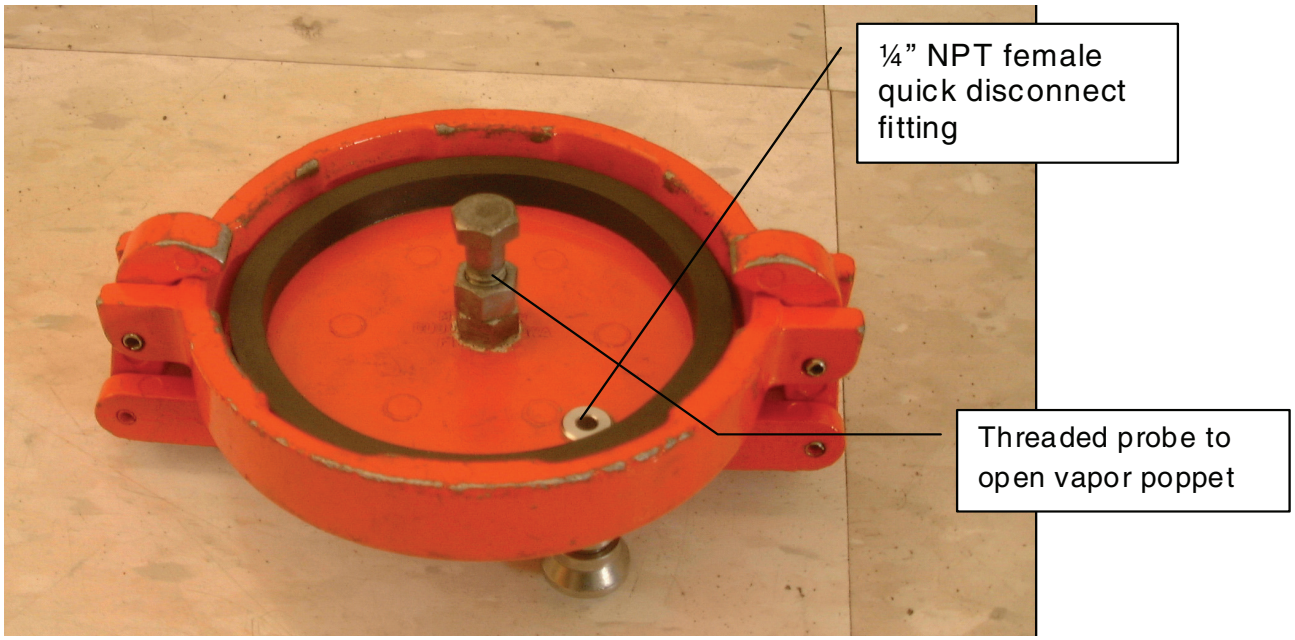

Figure 19. Typical modified vapor adaptor dust cap (bottom view)

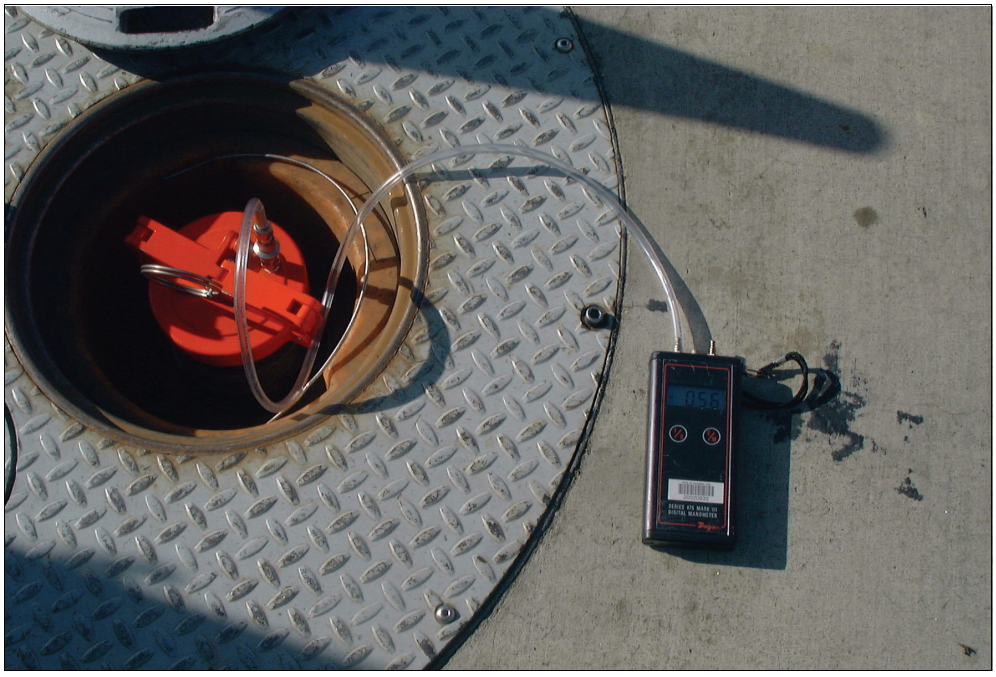

Figure 20. Typical field installation of UST Pressure Measurement Assembly

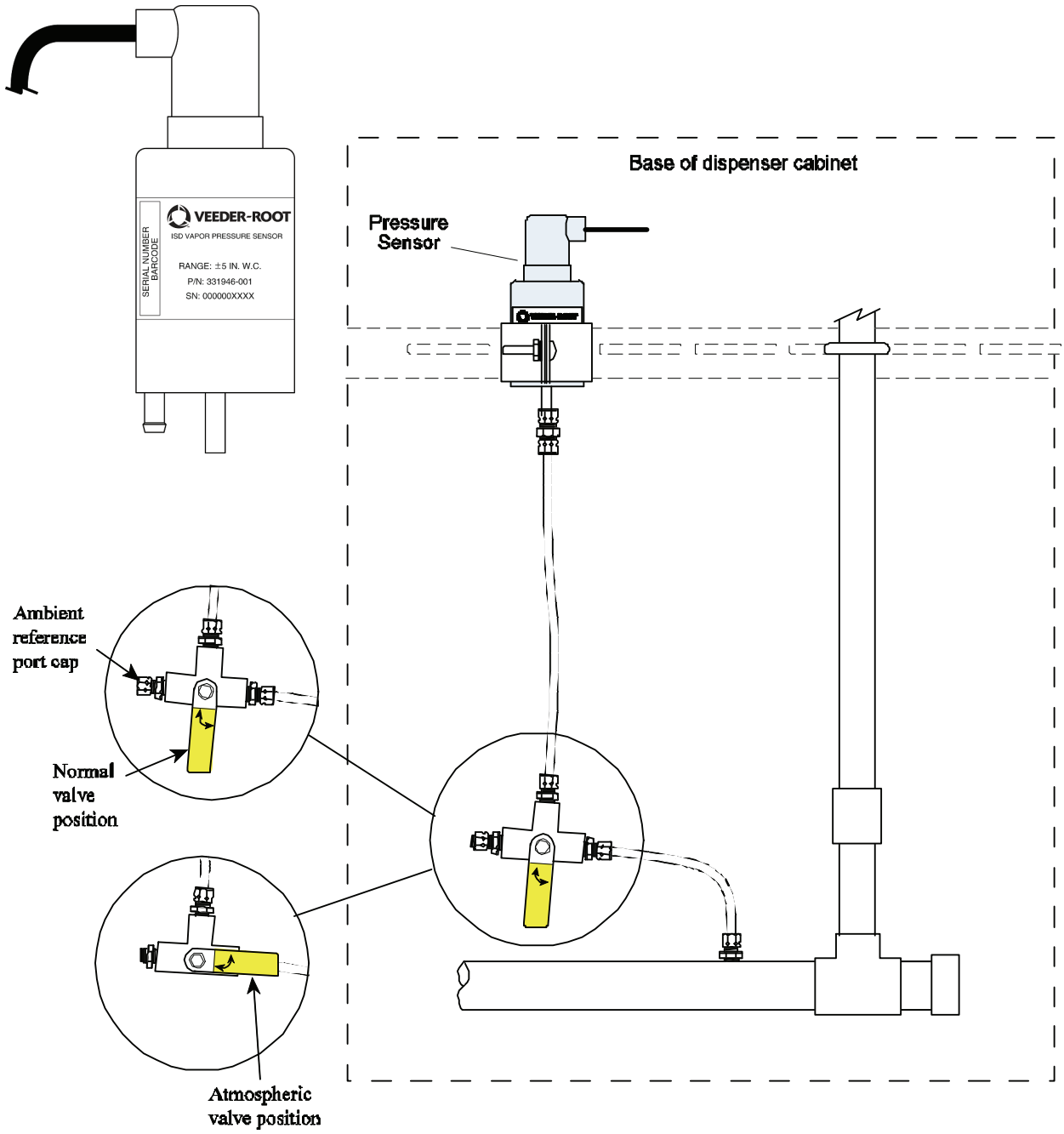

Figure 21. Vapor pressure sensor valve positions

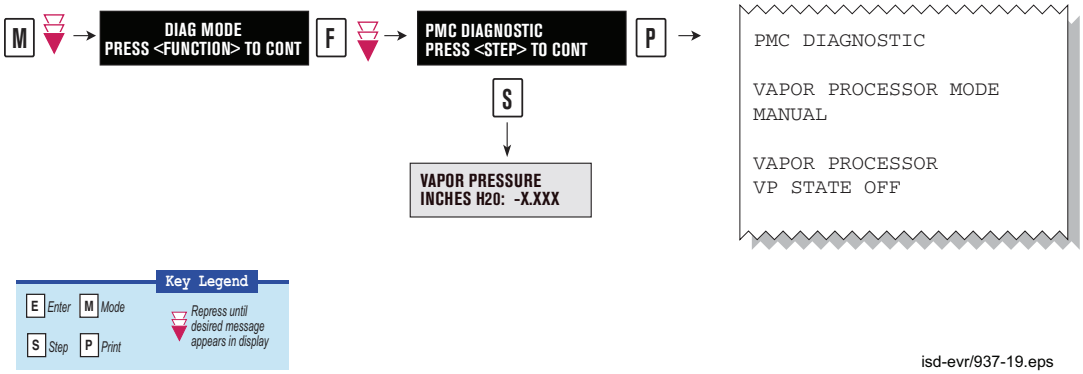

Figure 22. Accessing the vapor pressure sensor reading

Vapor Flow Meter Operability Test

This procedure is used to verify the setup and operation of the Vapor Flow Meter (VFM).

EQUIPMENT

Nitrogen High Pressure Cylinder with Pressure Regulator. Use a high pressure nitrogen cylinder capable of maintaining a pressure of at least 2000 pounds per square inch gauge (psig) and equipped with a compatible two-stage pressure regulator and a one psig relief valve. A ground strap is recommended during introduction of nitrogen into the system.

Flow meter. Use a flow meter (Rotometer) capable of accurately measuring nitrogen flow rate of 60 cubic feet per hour (cfh).

Pressure Measuring Device. An electronic pressure measuring device with a full range that shall not exceed 0-10 inches of water column (WC) with a minimum accuracy of 0.5 percent of full-scale. A 0-20 inches WC device may be used provided the minimum accuracy is 0.25 percent of full-scale.

Squeeze Bulb. A rubberized or equivalent device used to increase pressure to 5.00” WC.

Balance Nozzle Adapter (VST-STA-100). Provided by VST.

Surrogate Spout. Only the VST Surrogate Spout Assembly, VST-TSS-100, can be used to conduct the pre-test leak check. Figure 23 shows the VST Surrogate Spout Assembly.

Adapter Supply Hose. The nominal inside diameter of the flexible hose shall be between 0.75 and 1.00 inches, and the length of the tubing shall be between 3 feet and 6 feet.

Ball Valve. The nominal inside diameter of the ball valve shall be 0.25”.

Nitrogen Supply Line. The nominal inside diameter of the flexible tubing shall be between 0.25” and 0.375”.

Gas Volume Meter. Use a Dresser Measurement Roots Meter®, or equivalent (preferably fitted with a digital readout), to measure the volumetric flow rate through the Balance Nozzle Adapter. The gas volume meter shall be calibrated within180 days prior to conducting this procedure.

Stopwatch. Use a stopwatch accurate to within 0.2 seconds.

Lubricant. Appropriate lubricant, either grease or spray lubricant, shall be used to ensure a tight seal on the interface of the nozzle and the Balance Nozzle Adapter.

Leak Detection Solution. Any liquid solution designed to detect gaseous leaks may be used to verify the pressure integrity of test equipment during this test.

Notebook personal computer (PC) with ISD PC Setup Tool Version 1.03 or later. Serial communication cables are required to connect to the ISD system.

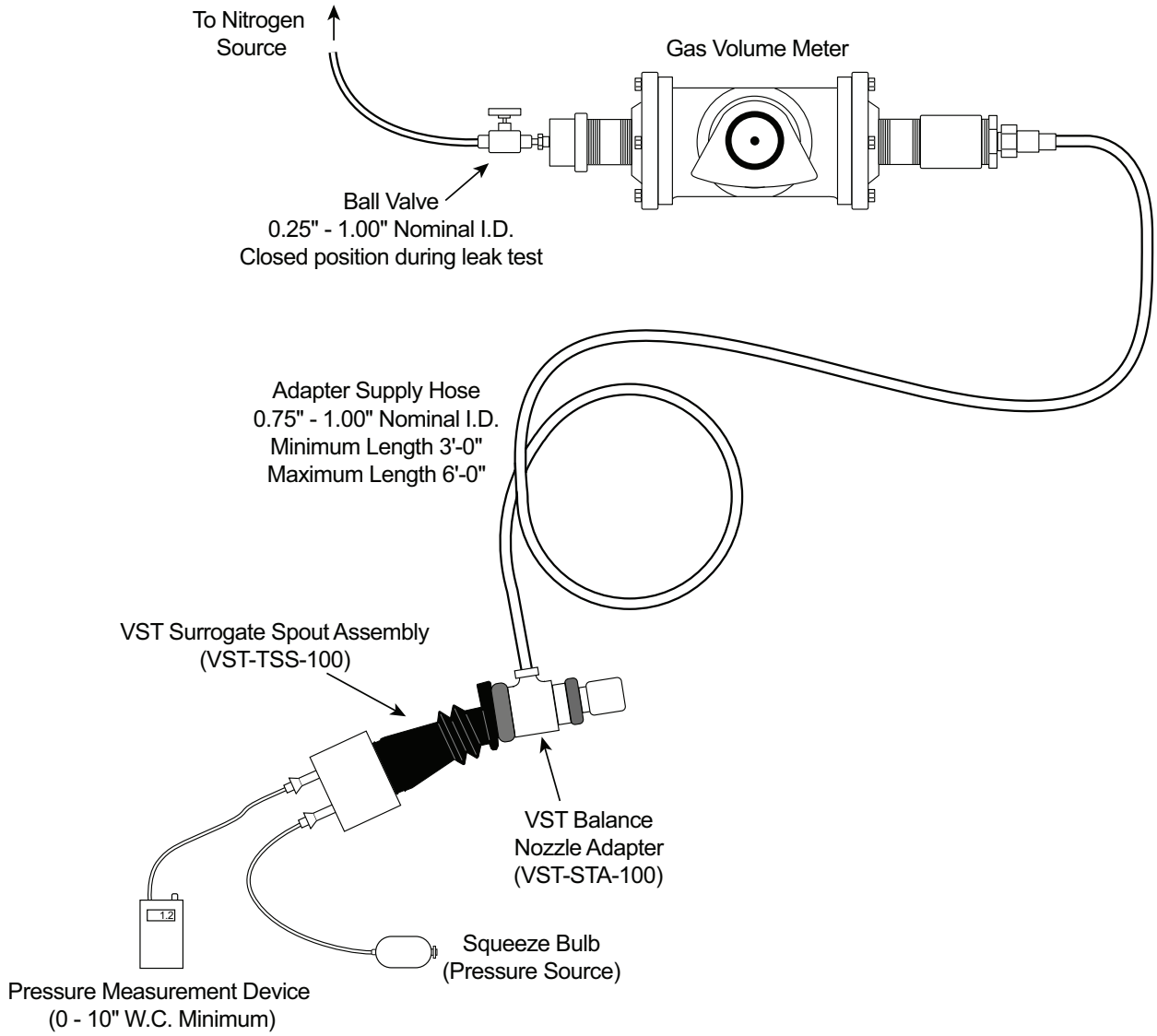

Figure 23. VST Surrogate Spout Assembly

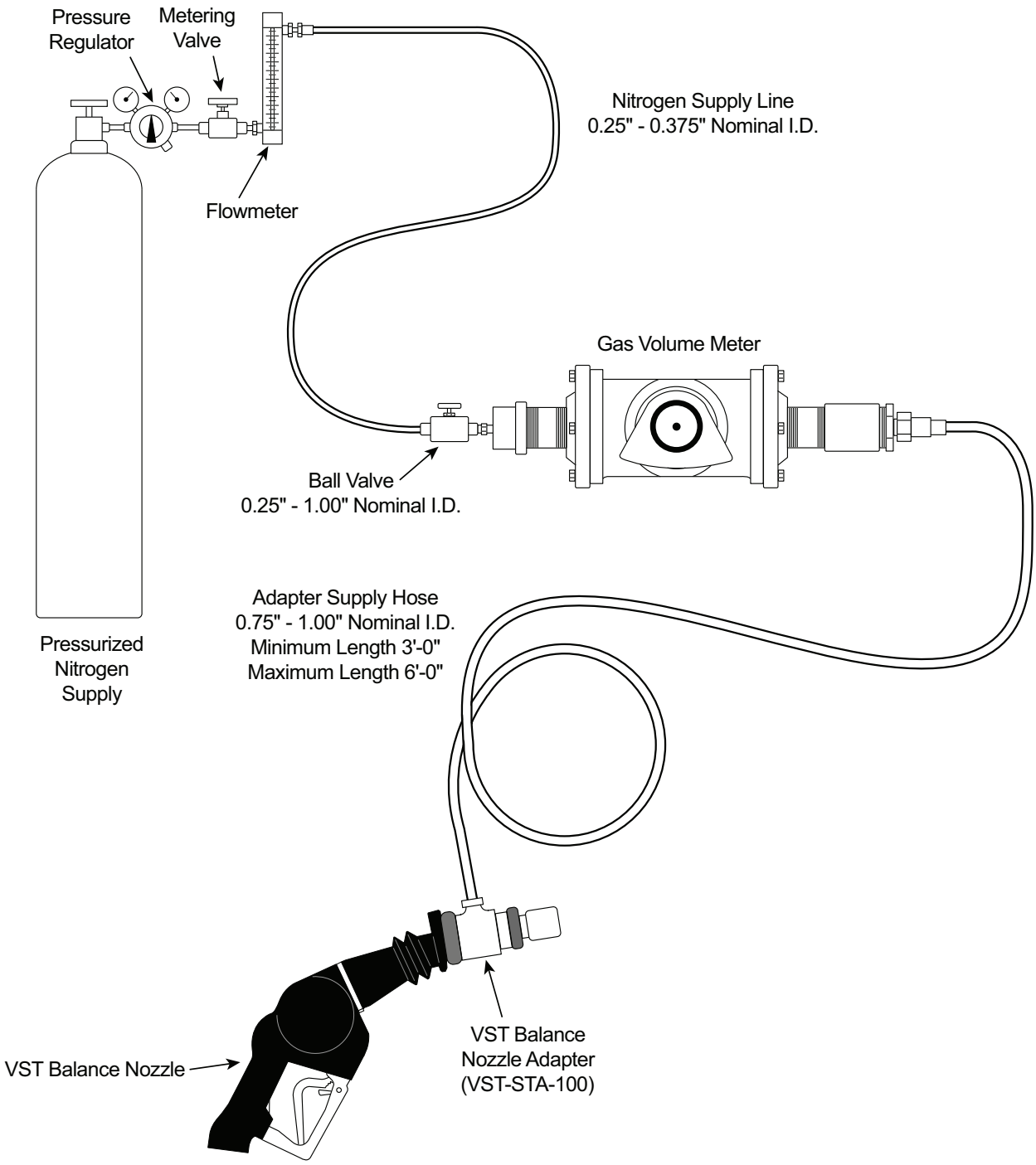

Figure 24. Vapor Flow Meter Test Assembly

PRE-TEST PROCEDURES

1. From the TLS, ISD Setup Menu print the ISD Setup Report. The ISD Hose Table will identify which VFM (column AA) is being used on each Fueling Position (FL).

```
ISD HOSE TABLE
ID  FP  FL  HL  AA  RR
------------------------
01  01  01  10  01  UU
02  02  02  10  01  UU
03  03  03  10  02  UU
04  04  04  10  02  UU
05  05  05  10  03  UU
06  06  06  10  03  UU
07  07  07  10  04  UU
08  08  08  10  04  UU
09  09  09  10  05  UU
10  10  10  10  05  UU
11  11  11  10  06  UU
12  12  12  10  06  UU

ISD AIRFLOW METER MAP
ID SERIAL NUM LABEL
------------------------
 1 00000111   AFM1 FP1 -
 2 00000112   AFM2 FP3 -
 3 00000113   AFM3 FP5 -
 4 00000114   AFM4 FP7 -
 5 00000115   AFM5 FP9 -
 6 00000116   AFM6 FP11
```

2. Connect the notebook PC running Veeder-Root's "ISD PC Setup Tool" terminal mode, v1.03 or higher, or use Microsoft HyperTerminal to the dedicated TLS serial port that is required for ISD reports access. Access the individual airflow meter totals for the airflow meter being tested using the following RS232 command: IV8700.

   Typical IV8700 Report

```
DEC 14, 2007  5:47 AM
AIR FLOW METER TOTALS
DATE-TIME                VOLUME
                    AFM  1    AFM  2    AFM  3    AFM  4
07-12-14 05:46:00 76739.892 63139.977 42860.023 44139.693
```

3. Conduct a pre-test leak check of the Balance Nozzle Adapter, the gas volume meter and the adapter supply hose by connecting the Balance Nozzle Adapter to a surrogate spout as shown in Figure 23. Turn the ball valve in the Figure 23 to the closed position. Raise the test pressure to 5.00" ±0.50" WC using a squeeze bulb. There shall not be a pressure drop of more than 1.00" WC from the above starting pressure for 30 seconds from the start of the test. If the leak test passes, proceed with the testing. If the leak test fails, proceed to isolate the source of the leak by pressurizing the test equipment again. Squirt liquid leak detector solution on interfaces and other potential leak sources and watch for the formation of bubbles. Once leak(s) are repaired, repeat the leak test procedure.

   Note: Leak checks shall be conducted in a shaded area or away from direct sunlight. Leak checks may be conducted during the testing to ensure leak integrity of test equipment.

4. Assemble the equipment as shown in Figure 24, Vapor Flow Meter Test Assembly. Leave the Balanced Nozzle Adaptor off of the nozzle at this time. Do not enable the dispenser to dispense product. Remove nozzle and utilize any method to keep the nozzle hook in the off position.
5. Ensure that the ground strap is properly connected to an acceptable ground.

   Note: The test requires that the nozzle be squeezed and liquid product must not flow from the dispenser.

TEST PROCEDURES

1. Prevent dispensing from all other fueling positions that use the VFM being tested.
2. Record the VFM serial number and fueling position being tested on the worksheet.
3. Completely drain any gasoline that may be in the nozzle and hose vapor return path by any acceptable method.
4. Continuing from Step 4 in the Pre-Test Procedures above, turn the ball valve to the open position and, adjust the nitrogen flow using the Rotometer to 60 cfh +/- 5.0 cfh.
5. Once the nitrogen flow is set, turn the ball valve to the closed position to stop the flow of nitrogen through the gas volume meter. This will ensure the nitrogen flow rate is set and the nitrogen can instantaneously be activated when the ball valve is turned to the open position.
6. Apply appropriate lubricant on the surface area in the Balance Nozzle Adapter. Lubricant can also be applied to the nozzle spout and the face seal (rubber boot) of the nozzle and the back of the Balance Nozzle Adapter if necessary.
7. Wait for two minutes of no air or liquid flow activity on the dispenser with the airflow meter being tested.
8. With the notebook PC connected to the TLS ISD, and the IV8700 Report page open, record the initial meter total for the VFM being tested on the worksheet.
9. Record the initial gas volume meter reading on the worksheet.
10. **Ensure the dispenser is <u>not</u> enabled to dispense product.** Simultaneously squeeze the nozzle handle to the full dispensing position and turn the ball valve to the open position to allow nitrogen to flow.

    Note: If the nozzle handle is not engaging the vapor/product valve within the nozzle, turn off the nitrogen flow using the ball valve; remove the Balance Nozzle Adapter from the nozzle to release the nitrogen pressure build up and repeat Steps 7 through 10. Excess pressure build up in the nozzle will engage the automatic shut-off diaphragm and not allow the vapor/product valve within the nozzle to open.
11. Monitor the gas volume meter display. Simultaneously stop the flow once 1.0 cubic feet (cf) +/- 0.10 cf of nitrogen is reached by turning the ball valve to the closed position and also releasing the nozzle handle.

    Note: Final volume values may be biased if the ball valve and the nozzle handle are not activated at the same time.
12. Record the end meter reading from the gas volume meter. Calculate the total cubic feet value by subtracting the initial meter reading obtained in Step 9 from the final meter reading in this step.
13. Convert the total cubic feet value to gallons using the equation on worksheet. Record the final gallon value on the worksheet.
14. Wait two minutes after each test run before obtaining the VFM reading from the notebook PC that is connected to the TLS ISD. A period of two minutes is required by the ISD system to receive and document total flow from the VFM.

15. Calculate the total VFM volume by subtracting the initial reading on Step 8 from the final reading on Step 14 and record the value on the worksheet.
16. Calculate the percent difference between the final gallons reading from the gas volume meter and the final VFM reading using the equation shown on the worksheet.

    Pass: If the volume percent difference between recorded ISD VFM and the gas volume meter is within 15%, check “Pass” on the worksheet, and repeat the Test Procedures for the next dispenser.

    Fail: If the volume percent difference between recorded ISD VFM and the gas volume meter is not within 15%, then go to Step 17.
17. Repeat Test Procedures using the opposite side of the dispenser. If test passes, continue to the next dispenser. If test fails, go to Step 18.
18. Conduct the leak test in Step 3 (of Pre-Test Procedures above) to evaluate the test equipment. If the equipment leak test passes go to Step 19. If the test fails, repair the leak and go to Step 17.
19. Replace the ISD flow meter and note the new vapor flow meter serial number on the form. Perform a Clear Test After Repair to reset tests for that dispenser, (see Section 7 of the ISD Install, Setup & Operation Manual, ISD/PMC Diagnostic Menus), at the TLS for both fueling positions on that dispenser.
20. After replacing the vapor flow meter repeat the Balance Vapor Flow Meter Operability Test.

POST-TEST PROCEDURES

1. Remove the Balance Nozzle Adapter and all equipment from the nozzle assembly.
2. A post-leak test of the equipment is not required if all the VFM’s are within range. For the VFM’s that are not within range, Steps 17 through 20 (of Test Procedures above) must be conducted. The leak test in Step 3 (of Pre-Test Procedures above) will be conducted to further evaluate the test equipment.
3. Prior to transportation, the inlet and outlet of the gas volume meter shall be carefully sealed to prevent foreign matter from entering the meter.

Site Shutdown Test

1. This test must be performed by a certified Veeder-Root contractor.
2. Remove power from TLS console.
3. Confirm power to submersible pumps is off by verifying that gasoline dispensing has been disabled.
4. Restore power to TLS console.
5. Complete Site Shutdown Worksheet

Veeder-Root Vapor Polisher Operability Test

See EO VR 204 Exhibit 11 and 12 for vapor polisher operability test.

Alarms

OVERVIEW OF TLS CONSOLE INTERFACE

The TLS console is continuously monitoring the vapor recovery system, PMC and ISD sensors for alarm conditions such as excessively high or low vapor collection, containment system vapor leakage and equipment problems.

During normal operation when the TLS console and monitored EVR/ISD System is functioning properly and no alarm conditions exist, the "ALL FUNCTIONS NORMAL" message will appear in the system status (bottom) line of the console display, and the green Power light will be On (see Figure 25).

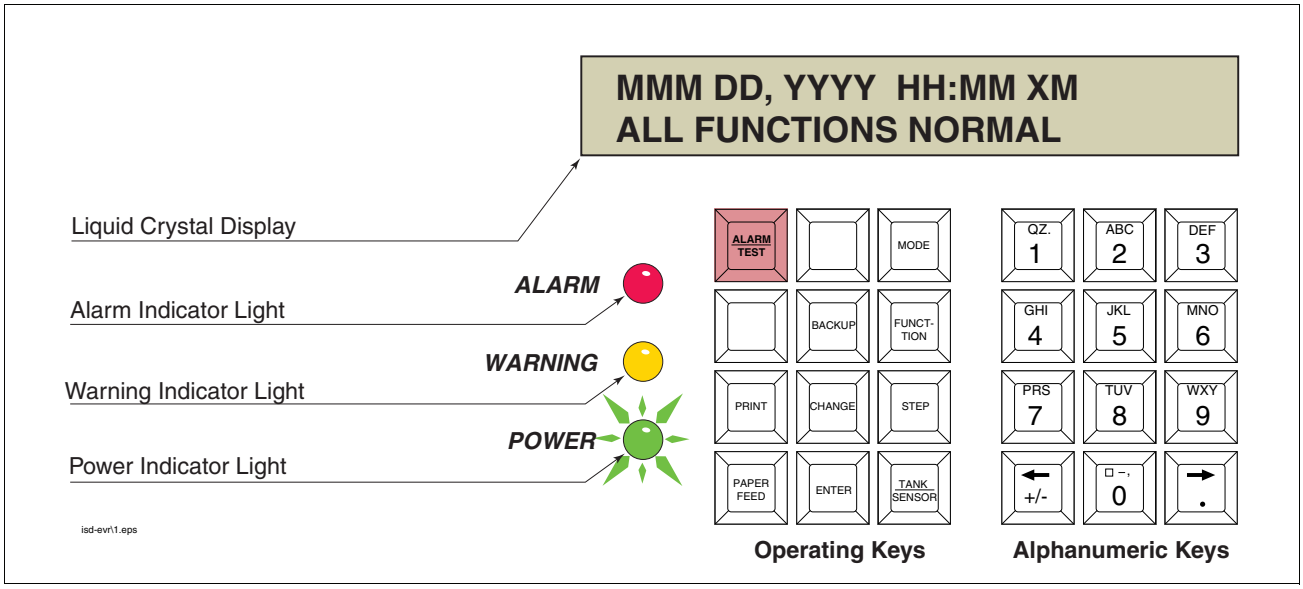

Figure 25. TLS console alarm interface

If an alarm condition occurs the system displays the condition type and its location. If more than one condition exists, the display will continuously cycle through the appropriate alarm messages. The system automatically prints an alarm report showing the alarm type, its location and the date and time the alarm condition occurred.

Warning and alarm posting causes the TLS console-based system to activate warning or failure indicator lights, an audible alarm, and an automatic strip paper printout documenting the warning or alarm. Historical reports of warning and alarm events are available for up to one year.

WARNING POSTING

Displayed messages alert you to the source and type of alarm. Printed messages show the type and location of the alarm. In the Warning example in Figure 26, the display's second line and printed message indicates that the containment system's vapor leak rate has increased above the allowed standard generating a warning.

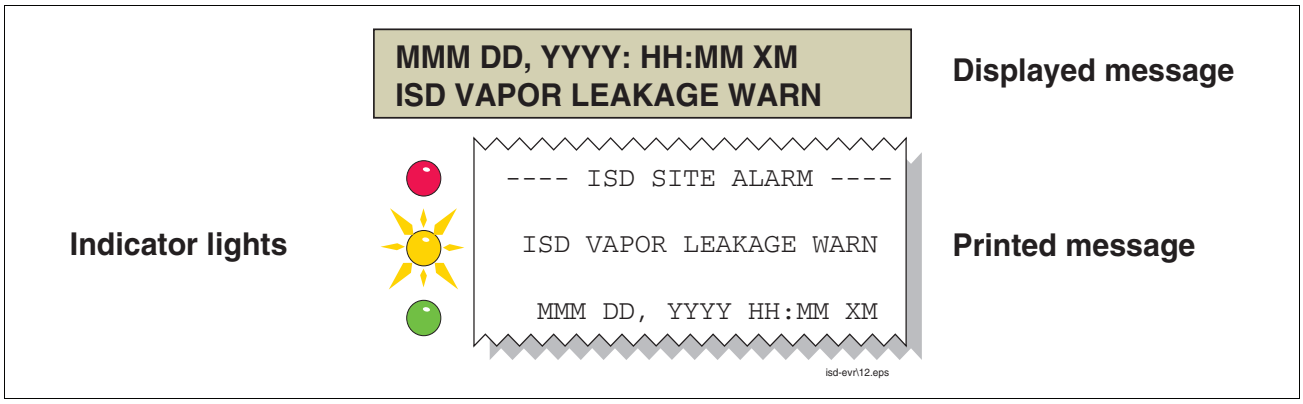

Figure 26. Example Warning posting

The TLS console also logs an entry to the Warning Log upon posting a warning.

ALARM POSTING

Displayed messages alert you to the source/number and type of alarm. Printed messages show the type and location of the alarm. In the alarm example in Figure 27 the display's second line and printed message indicates that vapor collection on hose 1, FP1 Super has dropped below the allowed standard resulting in a failure alarm. (By default, for unihose dispensers, FP1 BLEND3 will be displayed rather than FP1SUPER as shown below.)

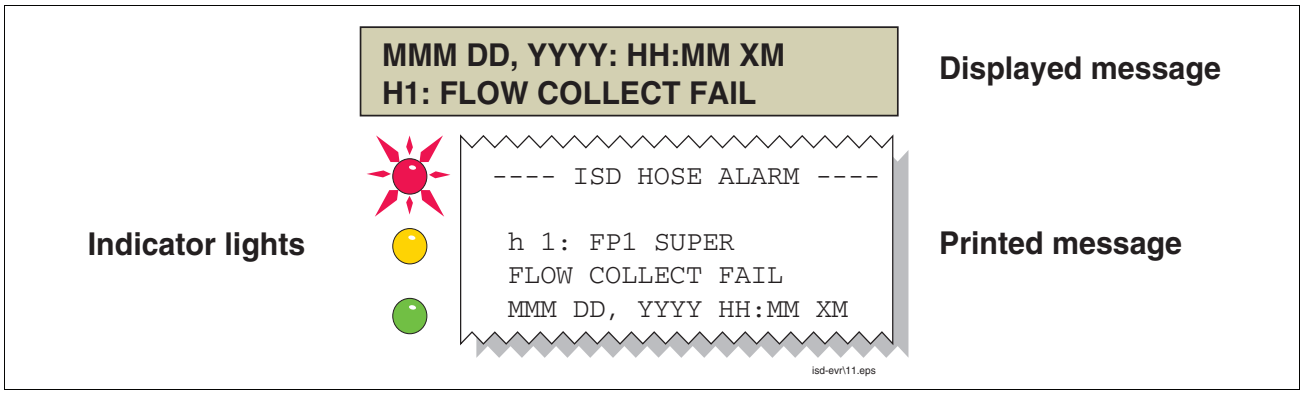

Figure 27. Example Alarm posting

Upon posting a failure alarm, the TLS console logs an entry to the Failure Log, prohibits fuel dispensing from all ISD gasoline fueling point(s) and logs a shutdown event to the Shutdown & Misc. Event Log.

The initial release of ISD will prohibit fuel dispensing from all gasoline fueling points by shutting down the submersible pumps in all gasoline tanks. The method of overriding an ISD Alarm shutdown is discussed in the “Site Reenable” section.

SITE REENABLE

The TLS console ALARM/TEST button allows you to perform a logged shutdown override and resume dispensing. Figure 28 illustrates the ISD alarm override procedure.

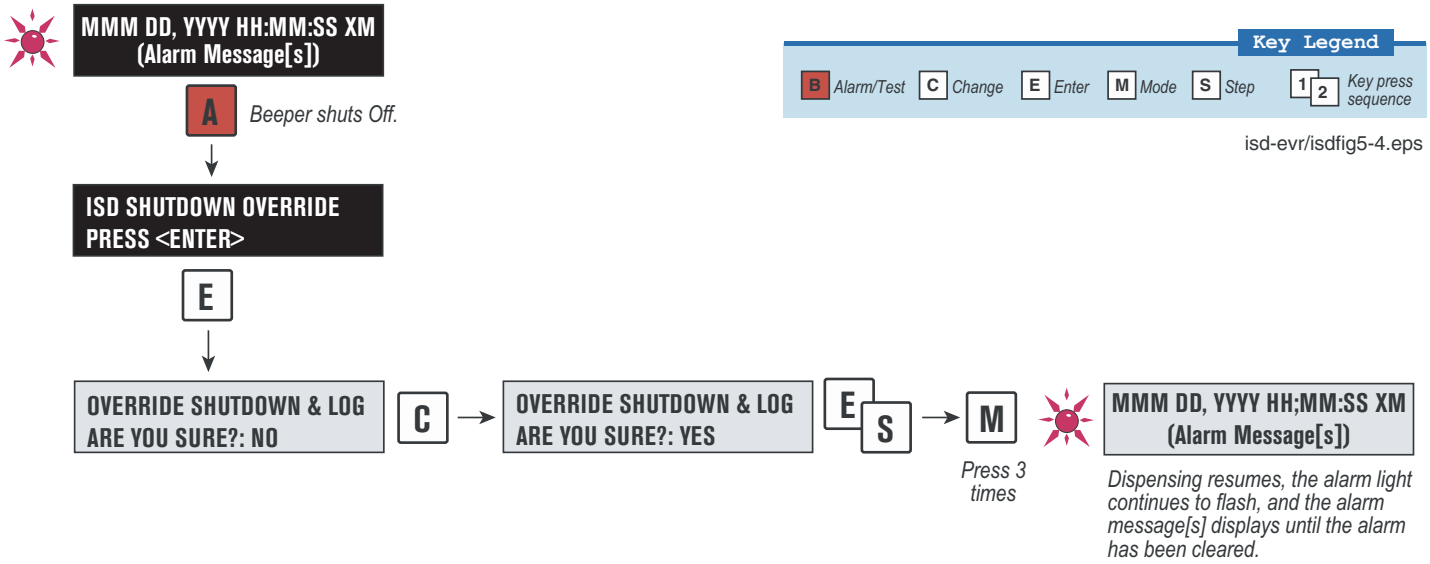

Figure 28. ISD Alarm Override Procedure

ALARM LOGS

Alarms will be recorded in the Warning Log or Failure Log of the monthly reports, which can be viewed electronically or via the integral printer (if queued in the most recent 10 events). The following example shows an excerpt from an electronically accessed monthly report.

Monthly Report Warning & Failure Log Examples:

```
WARNING ALARMS
DATE     TIME     DESCRIPTION                      READING         VALUE
08-03-15 00:01:26 FLOW PERFORMANCE HOSE BLOCKAGE   FP12 BLEND4      BLKD
08-02-17 00:00:49 FLOW PERFORMANCE HOSE BLOCKAGE   FP 1 BLEND4       0.59
08-02-01 00:01:07 VAPOR CONTAINMENT LEAKAGE        CFH@2 INCHES WC  22.39
FAILURE ALARMS
DATE     TIME     DESCRIPTION                      READING         VALUE
08-03-14 00:01:26 FLOW PERFORMANCE HOSE BLOCKAGE   FP12 BLEND4      BLKD
08-02-13 00:01:45 VAPOR CONTAINMENT LEAKAGE        CFH@2 INCHES WC  36.56
08-02-12 00:01:46 VAPOR CONTAINMENT LEAKAGE        CFH@2 INCHES WC  37.74
08-02-11 00:01:57 VAPOR CONTAINMENT LEAKAGE        CFH@2 INCHES WC  30.10
```

ALARM SEQUENCE

Each ISD monitoring test operates once each day on sensor data gathered over a fixed time interval and with a minimum required number of monitored events. The interval is a fixed number of calendar days depending on the test being run. As an example, the ISD Gross Pressure Containment Monitoring test requires seven calendar days of data. In this example, each daily test result represents a test based on the prior seven days' time period. When a test first fails, a warning is posted and a warning event is logged. If this condition persists for seven more consecutive days, an alarm is posted, a failure alarm event is logged and the site is shutdown. If the condition continues, additional failure events are logged and the site will continue to be shutdown each day.

ISD Alarm Summary

Table 3 summarizes the ISD Alarms - Alarms with a superscript 2 will result in a site shutdown.

Table 3. ISD Alarm Summary

Displayed Message	ISD Monitoring Category	Indicator Light	Cause	Suggested Troubleshooting[1]
ISD VAPOR LEAKAGE WARN	Containment	Yellow	Containment system leaks at 2 times the TP-201.3 standard	• Troubleshooting Guide found at www.vsthose.com. • Exhibit 4
ISD VAPOR LEAKAGE FAIL[2]	Containment	Red	8th Consecutive Failure of Pressure Integrity (Vapor Leak) Test	
ISD GROSS PRESSURE WARN	Containment	Yellow	95th percentile of 7-days' ullage pressure exceeds 1.3 IWC	• Troubleshooting Guide found at www.vsthose.com. • Exhibit 8 • Exhibit 9
ISD GROSS PRESSURE FAIL[2]	Containment	Red	8th Consecutive Failure of Gross Containment Pressure Test	
ISD DEGRD PRESSURE WARN	Containment	Yellow	75th percentile of 30-days' ullage pressure exceeds 0.3 IWC	
ISD DEGRD PRESSURE FAIL[2]	Containment	Red	31st Consecutive Failure of Degradation Pressure Test	
hnn: FLOW COLLECT WARN	Collection	Yellow	Vapor collection flow performance is less than 50%	• Troubleshooting Guide found at www.vsthose.com. • Exhibit 5 • Exhibit 13
hnn: FLOW COLLECT FAIL[2]	Collection	Red	2nd Consecutive Failure of Vapor Collection Flow Performance Monitoring Test	
ISD VP STATUS WARN[4]	Processor	Yellow	Failure of Vapor Processor Effluent Emissions or Duty Cycle test	• Troubleshooting Guide found at www.vsthose.com. • VP Emission Test • VP Duty Cycle Test
ISD VP STATUS FAIL[2,4]	Processor	Red	2nd Consecutive Failure of Vapor Processor Status test	

Table 3. ISD Alarm Summary

Displayed Message	ISD Monitoring Category	Indicator Light	Cause	Suggested Troubleshooting[1]
ISD VP PRESSURE WARN[4,5]	Processor	Yellow	90th percentile of 1 day ullage pressure exceeds 1 IWC[4] 90th percentile of 1 day ullage pressure exceeds 2.5 IWC[5]	• Troubleshooting Guide found at www.vsthose.com. • Exhibit 8 • Exhibit 9 • Ehibit 11 and 12
ISD VP PRESSURE FAIL[2,4,5]	Processor	Red	2nd Consecutive Failure of Vapor Processor Overpressure Test	
VP EMISSION WARN[3,4]	Processor	Yellow	Mass emission exceeded the certified threshold	• Troubleshooting Guide found at www.vsthose.com. • Exhibit 6 • Exhibit 9
VP EMISSION FAIL[4]	Processor	Red	2nd Consecutive Mass emission test failure	
VP DUTY CYCLE WARN[3,4]	Processor	Yellow	Duty cycle exceeds 18 hours per day 0r 75% of 24 hours	• Troubleshooting Guidefound at www.vsthose.com. • PMC Setup Procedure • Exhibit 8 • Exhibit 9 • Exhibit 4
VP DUTY CYCLE FAIL[4]	Processor	Red	2nd Consecutive Duty Cycle Test Failure	
ISD SENSOR OUT WARN	Self-Test	Yellow	Failure of Sensor Self-Test	• Confirm ISD sensor & module installation / communication per VR 204 IOM Section 16, Chapter 2
ISD SENSOR OUT FAIL	Self-Test	Red	8th Consecutive Failure of Sensor Self-Test	
ISD SETUP WARN	Self-Test	Yellow	Failure of Setup Test	• Confirm EVR/ISD programming per VR 204 IOM Section 16
ISD SETUP FAIL	Self-Test	Red	8th Consecutive Failure of Setup Test	

[1]See ISD Troubleshooting Manual, P/N 577013-819, and the VST ISD Troubleshooting Guide 9513-003 found at www.vsthose.com for a complete list of suggestions.

[2]SD Shutdown Alarms - see “Site Reenable” on page 16-36.

[3]This warning will result in a ISD VP Status Warn.

[4]VST ECS Membrane Processor.

[5]Veeder-Root Polisher

Other Alarms

Table 4 summarizes additional alarms that may be posted by ISD related equipment. These alarms are not critical to vapor recovery functionality, but could indicate erroneous setup or equipment malfunction. NOTE: Additional TLS console alarms listed in the TLS-3XX Operator's manual may be posted and may lead to an ISD shutdown alarm if persistent (see ISD Troubleshooting Manual for details).

Table 4. Other Alarms

Displayed Message	Indicator Light	Set Condition	Clear Condition
MISSING RELAY SETUP	Red	One or more required shutdown alarms have not been assigned to a relay.	Setup required shutdown alarms.
MISSING TANK SETUP	Red	There are no vapor recovery (gasoline) tanks defined or a gasoline pump has not been assigned to a control (shut down) device in at least one tank.	Complete gasoline tank setup.
MISSING HOSE SETUP	Red	There are no product meters assigned to a hose.	Assign at least 1 product meter to a hose.
hnn: VPRFLOW MTR SETUP	Red	Incoming transaction from a hose with an unavailable Vapor Flow Meter.	Configure Vapor Flow Meter (Smart Sensor) and enable it in ISD.
MISSING VAPOR PRES SEN	Red	There is no Vapor Pressure Sensor setup or detected.	Complete Vapor Pressure Sensor setup.
MISSING VAPOR FLOW MTR	Red	There is no Vapor Flow Meter setup or detected.	Complete Vapor Flow Meter setup.
fnn: CHK VAPOR FLOW MTR	Red	Failure of locked rotor test - possible locked vapor flow meter.	Locked rotor test passes or vapor flow meter deconfigured, or test cleared.

Reports

There are two main reports (CP-201 required) that are stored by the ISD system: the Monthly Status Report, stored for 12-months, and the Daily Status Report, stored for 365 days. A third report discussed in this section is the ISD Status Report. You can print out ISD reports from the TLS console front panel as shown in Figure 29.

- The monthly report includes:
  - ISD operational up-time (as a percentage)
  - EVR/ISD system pass time (as a percentage)
  - The Warning Log
  - The Failure Log
  - The Misc. Event Log
- The daily report includes:
  - Maximum and minimum ullage pressures
  - Results of the Vapor Containment Monitoring Gross (75th percentile), Degradation (95th percentile) ullage pressure test and Vapor Leakage Detection (CVLD) tests
  - Vapor Collection Monitoring test results for each fueling position
  - Vapor Processor Monitoring test results
- ISD Status Report
  - Last test report results

VIEWING ISD REPORTS

You can print out ISD reports from the TLS console front panel as shown in Figure 29.

.

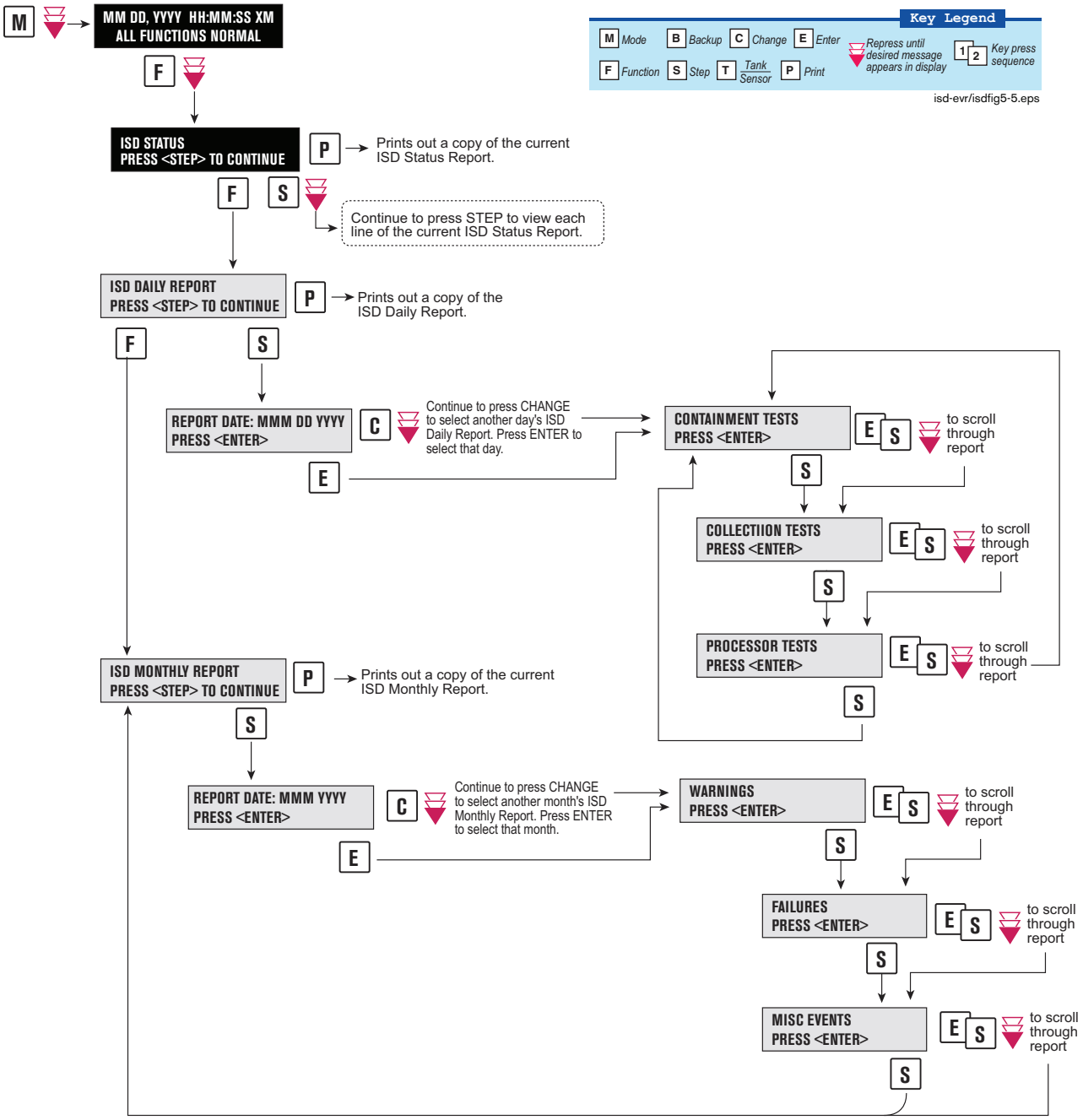

Figure 29. Printing ISD Reports on Console Printer

Figure 30 shows an example ISD Status Report.

```
ISD STATUS

(SITE NAME)
(SITE STREET)
(CITY,ST)
(PHONE)

(MMM DD, YYYY HH:MM XM)

EVR TYPE: BALANCE
ISD VERSION 01.02

REPORT DATE:SEP 22, 2004

CONTAINMENT TEST GROSS
STATUS: 0.1"WC NOTEST

CONTAINMENT TEST DEGRADE
STATUS: -1.1"WC NOTEST

CONTAINMENT TEST CVLD
STATUS: 3.26CFH NOTEST

COLLECTION FLOW TEST
STATUS: PASS

ISD SENSOR SELF TEST
STATUS: PASS

ISD SETUP SELF TEST
STATUS: PASS

VP STATUS TEST
STATUS: PASS

VP OVER PRESSURE TEST
STATUS: 0.2"WC PASS

EFFLUENT EMISSIONS TEST
STATUS  5.26     PASS

VP DUTY CYCLE TEST
STATUS  5.00     PASS
```

This menu appears only if EVR type = BALANCE

isd-evr\937-8.eps

Figure 30. ISD Status Report Example - TLS console printout

Figure 31 shows an example ISD Daily Report.

```
ISD DAILY REPORT

(SITE NAME)
(SITE STREET)
(CITY,ST)
(PHONE)
(MMM DD, YYYY HH:MM XM)

EVR TYPE: BALANCE
ISD VERSION 01.02
VAPOR PROCESSOR TYPE
VEEDER-ROOT POLISHER

REPORT DATE: MMM  DD
ISD VERSION 01.02

OVERALL STATUS   PASS
EVR CONTAINMENT  NOTEST
EVR COLLECTION   PASS
STAGE1   2 of   2 PASS
VAPOR PROCESSOR  PASS
SELF TEST        PASS
ISD MONITOR UP-TIME 100%

    ----------------
CONTAINMENT TESTS

GROSS    95%   -0.0N "WC
DGRD     75%   -0.7N "WC
VAPOR LEAK        0N CFH
MAX             0.9  "WC
MIN            -5.0  "WC

    ----------------
COLLECTION TESTS
GROSS
V/L(#)

FP 1: BLEND4
V/L = 0.94( 32)
FP 2: BLEND4
V/L = 0.96( 66)
::::::
FP11: BLEND4
V/L = 1.08( 40)
FP12: BLEND4
V/L = 1.09( 56)

    ----------------
PROCESSOR TESTS
         :
VP OVER PRESSURE TEST
STATUS -0.09"WC  PASS

VP STATUS TEST
STATUS           PASS

EFFLUENT EMISSIONS TEST
0.084 LB/1KG   PASS

VP DUTY CYCLE TEST
STATUS  0.55     PASS

    ----------------
SELF TEST

SETUP TEST       PASS
SENSOR OUT TEST  PASS
```

isd-evr\937-9.eps

Figure 31. ISD Daily Report Example - TLS console printout

Figure 32 shows an example ISD Monthly Report.

```
ISD MONTHLY REPORT

(SITE NAME)
(SITE STREET)
(CITY,ST)
(PHONE)
(MMM DD, YYYY HH:MM XM)

EVR TYPE: BALANCE
ISD VERSION 01.02
VAPOR PROCESSOR TYPE
VEEDER-ROOT POLISHER

REPORT DATE: MMM YYYY

OVERALL STATUS   PASS
EVR CONTAINMENT  NOTEST
EVR COLLECTION   PASS
STAGE1   2 of   2 NOTEST
VAPOR PROCESSOR  PASS
SELF TEST        PASS
ISD MONITOR UP-TIME:100%
EVR/ISD PASS TIME: 100%

    ----------------
DATE  TIME  DEVICE  HOSE
DESCRIPTION        VALUE

    ----------------
LAST 10 WARNINGS


    ----------------
LAST 10 FAILURES


    ----------------
LAST 10 MISC EVENTS

 1-02-08 11:59PM
READINESS ISD
ISD:PP EVR:PNP PENDING

 1-01-08 11:59PM
READINESS ISD
ISD:PP EVR:NNP PENDING
```

isd-evr\937-10.eps

Note: Warning & Failures lists include monitoring results from:
- Containment
- Stage 1
- Collection
- Processor

Up to 10 failures and 10 warnings

FP is fueling position number
BLEND is a hose label
BLKD refers to blocked condition

Note: Events
At least 1 action event for every failure listed above.

Description is truncated to include action. Up to 10 shut down and misc. events.

Figure 32. ISD Monthly Report Example - TLS console printout

Viewing ISD Reports via RS-232 Connection

CONNECTING LAPTOP TO CONSOLE

Connect your laptop to the TLS console's RS-232 or Multiport module using one of the methods shown in the examples in Figure 33 below.

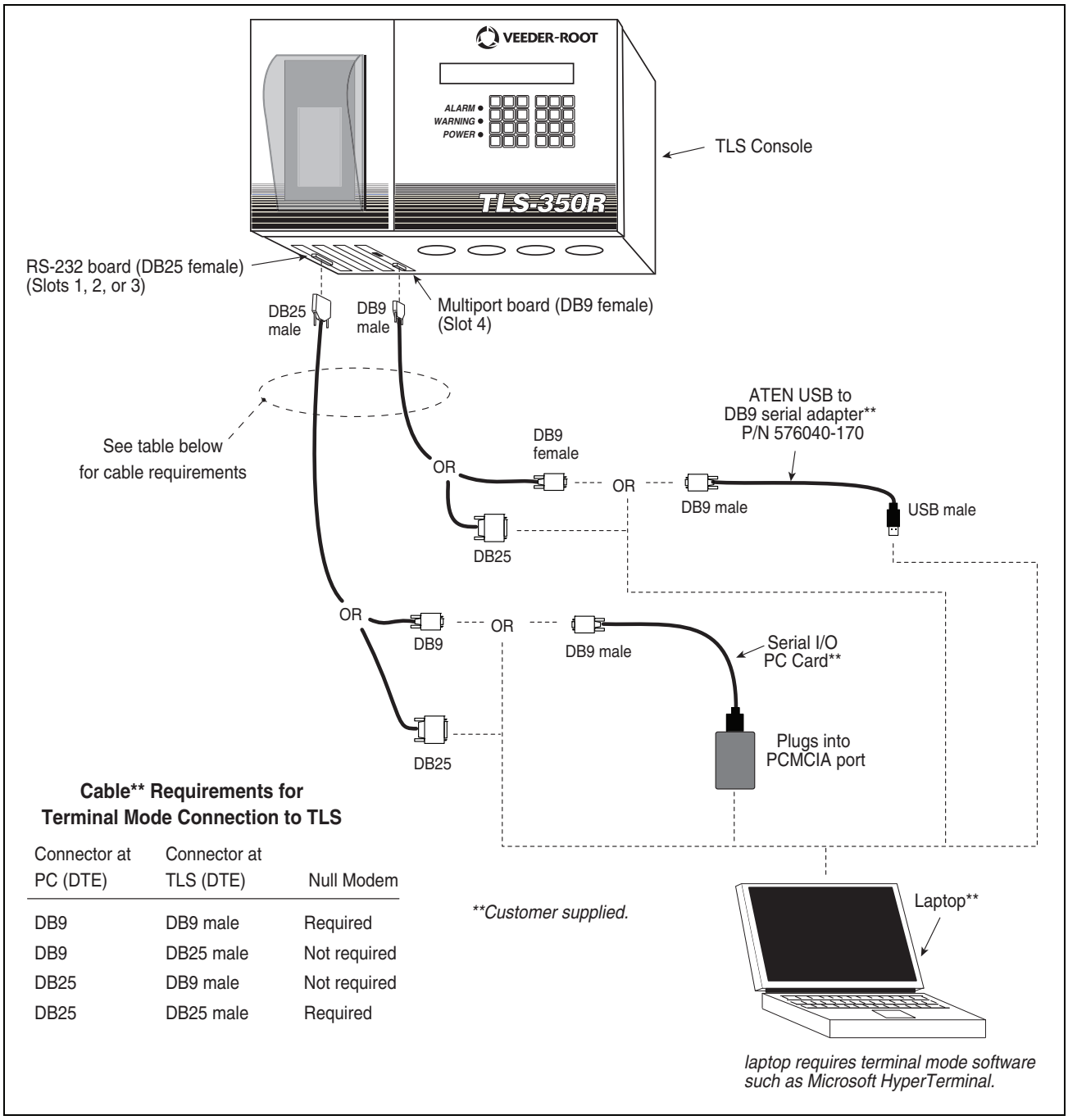

Cable Requirements for Terminal Mode Connection to TLS**

Connector at PC (DTE)	Connector at TLS (DTE)	Null Modem
DB9	DB9 male	Required
DB9	DB25 male	Not required
DB25	DB9 male	Not required
DB25	DB25 male	Required

***Customer supplied.*

Figure 33. Connecting laptop to TLS console for serial communication

CONNECTING LAPTOP TO CONSOLE

1. Open your laptop's serial communication program, e.g., HyperTerminal. You can typically find HyperTerminal under: Start/Programs/Accessories/Communications.
2. After opening the terminal software program, ignore (cancel) any modem/dialing related request windows since you will be directly connecting to the console via serial communications. When the Connection Description window appears (Figure 34), enter a connection name, e.g., TLSDIRECT, and click the OK button.

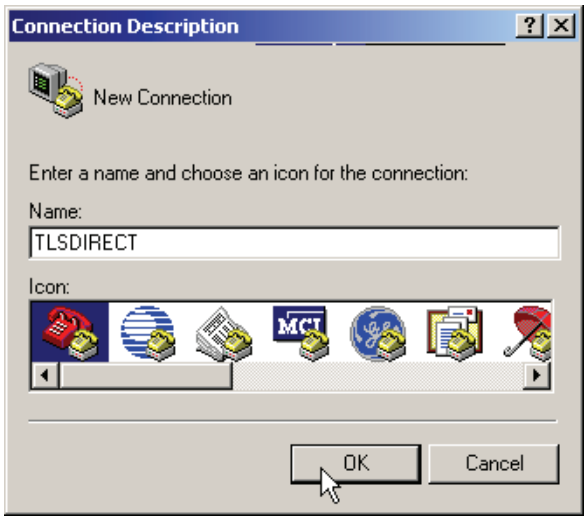

Figure 34. Connection Description window

3. After clicking the OK button, you may see a repeat of the modem/dialing windows, in which case ignore (cancel) them all.
4. When the Connect To window appears (Figure 35), depending on your connection method, select either COM1 (If RS-232 port on laptop), USB-Serial Controller (if using USB port on laptop), or Serial I/O PC Card (if using PCMCIA port on laptop) in the 'Connect using' drop down box, then click OK button.

Figure 35. Connect To window

5. Next you should see the 'Port Settings' window.

IMPORTANT! The settings of the laptop's com port must match those of the console's com port to which you are connected.

a. Go to the console front panel press the MODE key until you see:

```
SETUP MODE
PRESS <FUNCTION> TO CONT
```

b. Press the FUNCTION key until you see the message:

```
COMMUNICATIONS SETUP
PRESS <STEP> TO CONTINUE
```

c. Press the STEP key until you see the message:

```
PORT SETTINGS
PRESS <ENTER>
```

d. Press the PRINT key to printout the port settings for all communication modules installed in the console. Figure 36 shows an example port settings printout with the RS-232 module installed. Using the console port settings in the example below, your HyperTerminal 'Port Settings' window entries would be Bits per second - 2400, Data bits - 7, Parity - Odd, Stop Bits - 1. For the 'Flow Control' entry select None. Click OK.

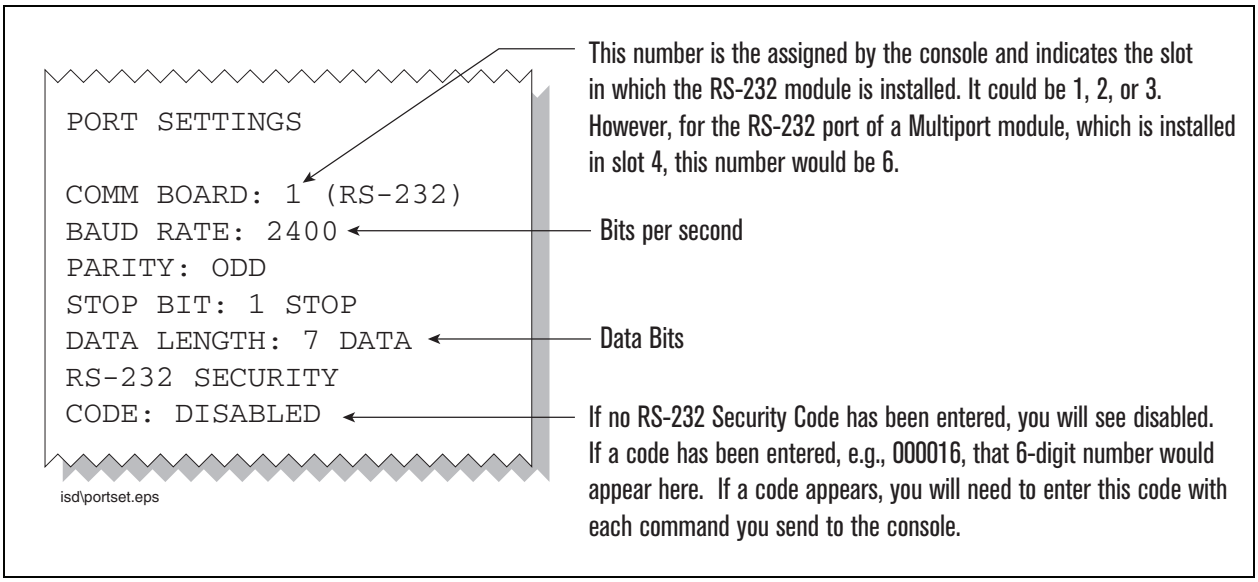

Figure 36. Console comm port settings prinout example

In the example port settings printout above, the RS-232 Security Code is disabled. If the code was enabled you would see a 6-digit number which you will need to enter to access the console (refer to the 'Sending Console Commands' paragraph below for more information).

6. After entering your port settings, the program's main window appears (Figure 37).

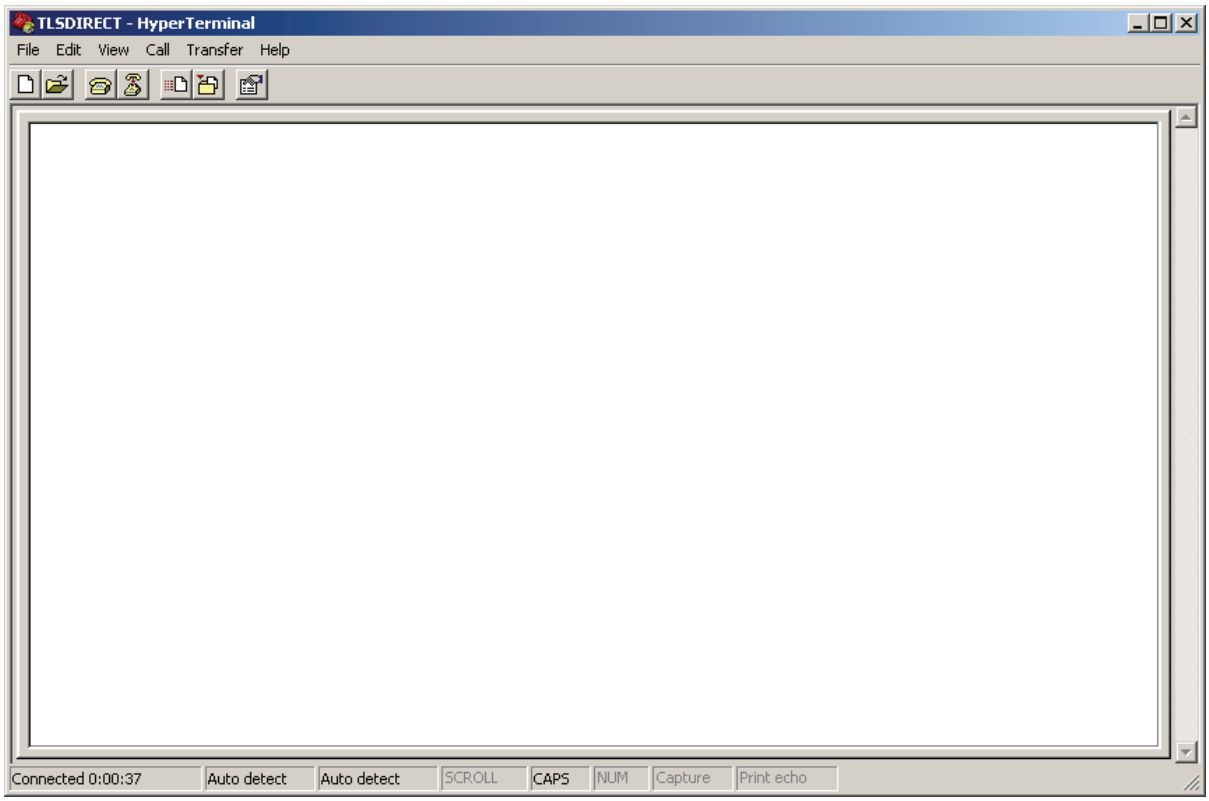

Figure 37. HyperTerminal main window

SENDING CONSOLE COMMANDS

Table 5 shows four important ISD console commands: IV0500, IV0200, IV0100, and IB6100. The <SOH> shown in the table means that you must press and hold the **Cntrl** key while you press the **A** key.

For example, let's say you want to see the Daily Report Details for the last 10 days.

Note: If you want to see the characters of the command as you type them in, click on File menu, then select Properties/Settings (tab)/ASCII Setup and click the check box for 'Echo typed characters locally', then click OK to close the window(s) and return to the main screen.

If the RS-232 Security Code is disabled - press and hold the Ctrl key while you press the A key, then type in IV0500010. If the RS-232 Security Code is enabled (e.g., 000016) you must enter the security code before the command - press and hold the Ctrl key while you press the A key, then type in 000016IV0500010.

You will see the typed command on the screen: ☺IV0500010 followed by the response (report) from the console. The ☺ symbol indicates CrtlA and the ♥ symbol indicates the end of the response.

If the console recognizes the command the response displays as soon as the command is typed in.

If the console does not recognize the command you would see something like ☺IV0500010☺9999FF1B♥ which indicates the console did not recognize the command.

All responses (Reports) can be printed or saved to a file. See the terminal program's help file for instructions.

Table 5. Serial Commands for ISD Alarm, Monthly, and Daily Reports

Report Type	Serial Command (PC to Console)*
Daily Report Details (See example Figure 38)	<SOH>IV0500ddd Where ddd = number of days, 001 = yesterday and today, 002 = two days ago, etc.
Monthly Status Report (See example Figure 39)	<SOH>IV0200yyyymm Where yyyy = year number, e.g. 2003, mm = month number, 01 = January, 02 = February, etc.
Alarm Status (See example Figure 40)	<SOH>IV0100
V80 Vapor Processor Runtime Diagnostic Report (See examples Figure 41 and Figure 42)	<SOH>IV8000
Vapor Valve Status Report (See example Figure 43)	<SOH>IB6100
Daily Vapor Polisher Diagnostic Report (See example Figure 45)	<SOH>IV8800

*<SOH> = Control A. For more information on TLS console serial commands, refer to the V-R Serial Interface Manual.

```
IV0500
JAN  8, 2008  3:52 PM                                                    isd-evr\937-11.eps

(SITE NAME)
(SITE STREET)
(CITY, ST)
(PHONE)

ISD DAILY REPORT DETAILS

EVR TYPE: BALANCE
ISD TYPE: 01.02
VAPOR PROCESSOR TYPE: VEEDER-ROOT POLISHER

OVERALL STATUS             :WARN            EVR VAPOR COLLECTION :PASS
EVR VAPOR CONTAINMENT      :WARN
ISD MONITOR UP-TIME        :100%            STAGE I TRANSFERS: 10 of 10 PASS
EVR/ISD PASS TIME          : 81%            VAPOR PROCESSOR      :PASS

Status Codes: (W)Warn (F)Fail (D)Degradation Fail (G)Gross Fail
(ISD-W)ISD Self-Test Warning (ISD-F)ISD Self-Test Fail (N)No Test

       ISD   ISD  ---CONTAINMENT TESTS---     STAGE        ---COLLECTION TESTS
       EVR   %UP  GROSS  DGRD  MAX  MIN  LEAK   I   VAPOR  FP1   FP2   FP3
DATE  STATUS TIME  95%    75%  "WC  "WC  CFH   XFR  PRCSR  BLEND BLEND BLEND
12/28   W    100%  0.2  -0.3   0.7 -2.5   18W PASS  PASS   0.94  1.07  1.10
12/29   W    100%  0.2  -0.3   0.7 -3.0   16W PASS  PASS   0.95  0.85  1.11
12/30   PASS 100%  0.2  -0.3   0.7 -4.1    0  PASS  PASS   0.95N 0.99  1.02
12/31   PASS 100%  0.2  -0.3   0.8 -3.0    0  PASS  PASS   0.97  0.96  1.17
01/01   PASS 100%  0.2  -0.3  -0.2 -3.3    0        PASS   0.86  1.02  0.99
01/02   PASS 100%  0.2  -0.3   0.9 -5.0    0  PASS  PASS   0.94  0.96  1.20
01/03   PASS 100%  0.2  -0.3   1.1 -4.3    0  PASS  PASS   0.82  1.10  1.13
01/04   PASS 100%  0.4  -0.3   1.9 -2.8    0        PASS   1.07  1.01  1.10
01/05   PASS 100%  0.2  -0.3   2.8 -5.0    0  PASS  PASS   0.97  1.12  0.84
01/06   PASS 100%  0.2  -0.3   0.4 -5.0    0  PASS  PASS   0.80  1.23  1.11
01/07   PASS 100%  0.2  -0.3   0.6 -5.0    0  PASS  PASS   0.93  0.96  1.07

---COLLECTION TESTS-DAILY AVERAGE HOSE FLOW PERFORMANCE-----------------------
      FP4   FP5   FP6   FP7   FP8   FP9   FP10  FP11  FP12
DATE  BLEND BLEND BLEND BLEND BLEND BLEND BLEND BLEND BLEND
12/28 1.06  1.16  0.96  1.21  1.10  1.03  1.08  1.13  1.13
12/29 1.03  1.12  1.16  1.07  1.13  1.01  0.97  1.06  1.06
12/30 1.04  0.96  0.95  1.06  1.11  0.97  1.14  1.18  0.94
12/31 1.07  1.20  1.05  1.10  1.00  0.90  1.09  1.07  1.27
01/01 1.03  1.18  1.19  0.85  1.16  1.24  1.13  1.31  1.16
01/02 0.94  0.98  1.10  0.97  1.10  0.91  0.98  1.08  1.09
01/03 1.12  0.96  1.17  1.12  1.07  1.06  1.12  1.12  1.10
01/04 1.04  1.18  1.09  1.16  1.16  0.90  1.19  1.05  1.13
01/05 1.13  0.94  1.11  1.02  1.10  1.10  1.21  1.19  1.04
01/06 1.11  1.14  1.09  1.10  1.18  0.95  1.15  1.09  1.05
01/07 0.96  1.13  1.07  0.84  1.13  1.02  1.06  1.12  1.00
```

Figure 38. ISD Daily Report Details - Serial to PC Format

```
IV0200
JAN  8, 2008  3:53 PM                                                    isd-evr\937-12.eps

(SITE NAME)
(SITE STREET)
(CITY, ST)
(PHONE)

ISD MONTHLY STATUS REPORT

EVR TYPE: BALANCE
ISD TYPE: 01.02
VAPOR PROCESSOR TYPE: VEEDER-ROOT POLISHER

OVERALL STATUS             :FAIL            EVR VAPOR COLLECTION :FAIL
EVR VAPOR CONTAINMENT      :WARN
ISD MONITOR UP-TIME        :100%            STAGE I TRANSFERS: 33 of 33 PASS
EVR/ISD PASS TIME          : 77%            VAPOR PROCESSOR      :WARN

CARB EVR CERTIFIED OPERATING REQUIREMENTS

ISD MONITORING TEST PASS/FAIL THRESHOLDS
                                                     PERIOD    BELOW  ABOVE

VAPOR COLLECTION BALANCE SYS FLOW PERFORMANCE         1DAYS     0.60  ----
VAPOR CONTAINMENT GROSS FAIL, 95th PERCENTILE         7DAYS     ----  1.30"wcg
VAPOR CONTAINMENT DEGRADATION, 75th PERCENTILE       30DAYS     ----  0.30"wcg
VAPOR CONTAINMENT LEAK DETECTION FAIL @2"WCG          7DAYS     ----  9.38cfh
STAGE I VAPOR TRANSFER FAIL, 50th PERCENTILE         20MINS     ----  2.50"wcg
VAPOR PROCESSOR PRESSURE FAIL                         1DAYS     ----  1.00"wcg
VAPOR PROCESSOR MASS EMISSION FAIL (LB/1KG)           1DAYS     ----  0.64
VAPOR PROCESSOR DUTY CYCLE FAIL                       1DAYS     ----  75.00%

WARNING ALARMS
DATE     TIME     DESCRIPTION                      READING         VALUE
07-12-30 00:02:33 VAPOR CONTAINMENT LEAKAGE        CFH@2 INCHES WC  15.51
07-12-29 00:02:07 VAPOR CONTAINMENT LEAKAGE        CFH@2 INCHES WC  18.24
07-12-28 00:02:01 VAPOR CONTAINMENT LEAKAGE        CFH@2 INCHES WC  17.34
07-12-27 00:01:36 VAPOR CONTAINMENT LEAKAGE        CFH@2 INCHES WC  17.11
07-12-26 00:01:41 VAPOR CONTAINMENT LEAKAGE        CFH@2 INCHES WC  18.66
07-12-10 00:02:05 FLOW PERFORMANCE HOSE BLOCKAGE   FP 8 BLEND4      BLKD
07-12-06 00:02:40 VAPOR PROCESSOR OVER PRESSURE    DAILY 90%         2.6
FAILURE ALARMS
DATE     TIME     DESCRIPTION                      READING         VALUE
07-12-11 00:02:05 FLOW PERFORMANCE HOSE BLOCKAGE   FP 8 BLEND4      BLKD

SHUTDOWN & MISCELLANEOUS EVENTS
DATE     TIME     DESCRIPTION                      ACTION/NAME
07-12-13 19:52:52 VAPOR PROCESSOR                 TEST MANUALLY CLEARED
07-12-11 00:02:18 FLOW PERFORMANCE BLK            DISABLED FP 08
```

Figure 39. ISD Monthly Status Report - Serial to PC Format

```
IV0100
JAN  8, 2008  3:53 PM                                          isd-evr\937-13.eps

(SITE NAME)
(SITE STREET)
(CITY, ST)
(PHONE)

ISD ALARM STATUS REPORT

EVR TYPE: BALANCE
ISD TYPE: 01.02
VAPOR PROCESSOR TYPE: VST VAPOR PROCESSOR

OVERALL STATUS             :PASS            EVR VAPOR COLLECTION :PASS
EVR VAPOR CONTAINMENT      :PASS
ISD MONITOR UP-TIME        :100%            STAGE I TRANSFERS:  2 of  2 PASS
EVR/ISD PASS TIME          :100%            VAPOR PROCESSOR      :PASS

WARNING ALARMS
DATE     TIME     DESCRIPTION                     READING         VALUE
07-12-30 00:02:33 VAPOR CONTAINMENT LEAKAGE       CFH@2 INCHES WC  15.51
07-12-29 00:02:07 VAPOR CONTAINMENT LEAKAGE       CFH@2 INCHES WC  18.24
07-12-28 00:02:01 VAPOR CONTAINMENT LEAKAGE       CFH@2 INCHES WC  17.34
07-12-27 00:01:36 VAPOR CONTAINMENT LEAKAGE       CFH@2 INCHES WC  17.11
07-12-26 00:01:41 VAPOR CONTAINMENT LEAKAGE       CFH@2 INCHES WC  18.66
07-12-10 00:02:05 FLOW PERFORMANCE HOSE BLOCKAGE  FP 8 BLEND4      BLKD
07-12-06 00:02:40 VAPOR PROCESSOR OVER PRESSURE   DAILY 90%         2.6
07-11-16 00:02:17 FLOW PERFORMANCE HOSE BLOCKAGE  FP 8 BLEND4      BLKD
07-11-13 00:02:28 FLOW PERFORMANCE HOSE BLOCKAGE  FP 8 BLEND4      BLKD
07-11-11 00:03:19 FLOW PERFORMANCE HOSE BLOCKAGE  FP 6 BLEND4      BLKD

FAILURE ALARMS
DATE     TIME     DESCRIPTION                     READING         VALUE
07-11-14 00:02:18 FLOW PERFORMANCE HOSE BLOCKAGE  FP 8 BLEND4      BLKD
07-11-12 00:02:38 FLOW PERFORMANCE HOSE BLOCKAGE  FP 6 BLEND4      BLKD
07-11-09 00:03:41 CONTAINMENT GROSS OVER PRESSURE WEEKLY 95%        4.60
07-11-03 00:01:25 VAPOR PROCESSOR OVER PRESSURE   DAILY 90%         2.6
07-10-31 00:02:45 VAPOR PROCESSOR STATUS
                  VP EMISSIONS FAIL               LB/1KB           0.693
07-10-28 00:00:39 VAPOR PROCESSOR OVER PRESSURE   DAILY 90%         2.6
07-10-19 00:01:27 VAPOR PROCESSOR OVER PRESSURE   DAILY 90%         2.6
07-10-15 00:03:14 FLOW PERFORMANCE HOSE BLOCKAGE  FP 2 BLEND4      BLKD
07-10-15 00:03:13 FLOW PERFORMANCE HOSE BLOCKAGE  FP 1 BLEND4      BLKD
07-10-14 00:03:11 FLOW PERFORMANCE HOSE BLOCKAGE  FP 2 BLEND4      BLKD

SHUTDOWN & MISCELLANEOUS EVENTS
DATE     TIME     DESCRIPTION                     ACTION/NAME
07-12-13 19:52:52 VAPOR PROCESSOR                TEST MANUALLY CLEARED
07-11-18 00:02:24 READINESS ISD:PP EVR:PPP       ISD & EVR READY
07-11-17 13:09:06 READINESS ISD:PP EVR:NNN       EVR READINESS PENDING
07-11-17 13:09:06 ISD STARTUP
07-11-17 13:03:24 ISD SHUTDOWN
07-11-14 00:02:18 FLOW PERFORMANCE BLK           DISABLED FP 08 BLEND4
07-11-12 00:02:38 FLOW PERFORMANCE BLK           DISABLED FP 06 BLEND4
07-11-09 00:03:41 CONTAINMENT GROSS              DISABLED DISPENSERS
07-11-04 01:00:00 TIME CHANGE DETECTED AT:      07-11-04 02:00:13
07-11-03 00:01:25 VAPOR PROCESSOR PROBLEM        DISABLED DISPENSERS
```

Figure 40. ISD Alarm Status Report - Serial to PC Format

Figure 41 shows an example VST Vapor Processor Runtime Diagnostic Report.

```
IV8000
SEP 30, 2007 12:27 AM

(SITE NAME)
(SITE STREET)
(CITY,ST)
(PHONE)
(MMM DD, YYYY HH:MM XM)

VAPOR PROCESSOR
                    ELAPSED    PRESSURE INCHES H2O    RUNTIME
DATE-TIME ON        MINUTES       ON        OFF        FAULT
 5-04-07  3:31PM     8.87         0.244    -0.202        NO
 5-05-07  4:17AM     3.35         0.202    -0.212        NO
 5-07-07 10:17PM     3.50         0.206    -0.221        NO
 5-07-07 10:28PM    15.12         0.384    -0.356        NO
 5-08-07  8:16PM    21.77         0.325    -0.211        NO
 5-09-07  6:35PM    20.60         0.368    -0.276        NO
 5-10-07  8:03PM     6.18         0.226    -0.398        NO
 5-10-07  8:15PM     2.55         0.231    -0.227        NO
 5-13-07  8:55PM    18.23         0.314    -0.205        NO
```

isd-evr\fig5-18.eps

Figure 41. VST Vapor Processor Runtime Diagnostics Report - Serial to PC Format

Figure 42 shows an example V-R Vapor Polisher Runtime Diagnostic Report and Table 4 explains the `IV8000` report's event codes.

```
IV8000
FEB  4, 2008  1:01 PM

TLS_350 UST
VEEDER-ROOT TEST LAB
125 POWDER FOREST DR
SIMSBURY, CT 06070

VAPOR POLISHER
VALVE EVENT          PRESSURE
DATE-TIME              "WC      EVENT CODE
 1-31-08  3:44PM      -0.700    OPEN PURGE
 1-31-08  3:47PM       0.038    CLOSE FORCE PURGE
 1-31-08  3:51PM      -0.255    OPEN PURGE
 1-31-08  8:08PM      -0.300    CLOSE PURGE Hi P
 2-01-08  1:59PM      -0.300    OPEN PURGE
 2-01-08  2:18PM      -0.263    OPEN PURGE
 2-01-08  2:33PM      -0.289    OPEN PURGE
 2-04-08 11:22AM      -0.560    NO EVENT
 2-04-08 11:28AM      -0.560    OPEN PURGE
 2-04-08 11:48AM      -0.300    OPEN PURGE
 2-04-08 12:28PM      -0.263    OPEN PURGE
 2-04-08 12:42PM      -0.299    OPEN PURGE
```

Figure 42. V-R Vapor Polisher Runtime Diagnostics Report - Serial to PC Format

Table 6. Vapor Processor Runtime Diagnostic Report Event Codes

Event Code	Cause	Event Code	Cause
NO EVENT	The valve changed state outside of the carbon canister algorithm.	CLOSE FULL	Canister load has reached 100%. Further loading is not allowed.
CLOSE TEST	Manual operation of the valve	CLOSE NEAR FULL	Canister load has exceeded 80%. Further loading is not allowed unless pressure exceeds +1.3.
OPEN TEST	Manual operation of the valve	CLOSE EMPTY	Excess purging has completed.
CLOSE PURGE HI P	The canister state is in excess purge and the pressure is above -0.5.	OPEN PURGE	Canister load is >0% and pressure <-0.25
CLOSE PURGE TIME	The canister state is in excess purge and the time is outside 6AM to 4PM.	OPEN EXCESS PURGE	Canister load is 0%, Excess purge is incomplete, pressure <-1.5, time is between 6AM and 4PM.
CLOSE FORCE PURGE	Canister is in startup period. Loading with pressures <+1.05 is not allowed until startup period is complete.	OPEN FILL	Canister valve is open for loading: • When pressure is greater than or equal to 0.75 IWC and Canister load is less than 80%.. • Pressure is greater than or equal to 1.3 IWC and Canister load is greater than 80% and less than 100%
CANISTER EMPTY	Canister was loaded above 1% and purged to 0%. No valve state change.		

Figure 43 shows an example Vapor Valve Status report.

```
IB6100
FEB  4, 2008  1:09 PM
s 2:Vapor valve

VAPOR VALVE
SERIAL NUMBER     123456
VALVE POSITION:     OPEN
OPEN CAP:        CHARGED
CLOSE CAP:       CHARGED
AMBNT TEMP:      65.08 F
OUTLET TMP:      75.05 F
SENSOR FAULTS:
 NONE
```

Figure 43. Vapor Valve Status Report - Serial to PC Format

The IB6100 command reports the current state of the Vapor Valve Components. The current position of the valve is reported as Open or Closed. The Capacitors are used to move the valve and are reported as Charged or Discharged. Outlet Temperature is the Canister thermal probe temperature. Ambient Temperature is the temperature at the Vapor Valve ambient temperature sensor. Sensor Faults are the active faults reported by the Vapor Valve. The IB6100 (Figure 43) command only provides active Sensor Fault conditions. Use the IB6200 command to see archived fault conditions (Figure 44).

```
IB6200
SEP 19, 2008  1:05 PM

BIG 3 OIL
123 POWER DRIVE
HELENA, MT
(406) 123-4567

SMART SENSOR SUB ALARM HISTORY

ID  TYPE  ALARM TYPE           SUB ALARM                STATE
DATE    TIME
 9   14   SENSOR FAULT ALARM   TEMPERATURE RANGE FAULT  CLEAR   9-19-08
11:50AM
 9   14   SENSOR FAULT ALARM   TEMPERATURE RANGE FAULT  ALARM   9-19-08
11:46AM
```

Figure 44. Smart Sensor Sub Alarm History Report - Serial to PC Format

Figure 45 shows an example PMC Daily Vapor Polisher Diagnostic Report.

```
IV8800
OCT  2, 2008  2:58 PM

PMC DAILY VAPOR POLISHER DIAGNOSTIC

                   LOAD  PRGE  MIN%  MAX%  SELF   PRESS
DATE/TIME           HRS   HRS  LOAD  LOAD  TEST    TEST
08-10-02 14:58:58  3.1   2.5    15    69  WARN    FAIL
```

Figure 45. PMC Daily Vapor Polisher Diagnostic Report - Serial to PC Format

6 Maintenance

TLS Console

The TLS console, including interface modules, do not require scheduled maintenance. ISD System Self-Test Monitoring algorithms are designed to verify proper selection, setup and operation of the TLS console and sensors. Servicing should be performed in accordance with the In-Station Diagnostic System Troubleshooting Guide, Manual 577013-819 in response to warning or alarm conditions.

Air Flow Meter

There is no recommended maintenance, inspection nor calibration for the Air Flow Meter. Servicing should be performed in accordance with the In-Station Diagnostic System Troubleshooting Guide, Manual 577013-819 in response to warning or alarm conditions.

Vapor Pressure Sensor

There is no recommended maintenance, inspection nor calibration for the Vapor Pressure Sensor. Servicing should be performed in accordance with the In-Station Diagnostic System Troubleshooting Guide, Manual 577013-819 in response to warning or alarm conditions.

7 Diagnostic Menus

The diagnostic menus below are accessed and viewed from the TLS console front panel.

Smart Sensor Diagnostic Menu

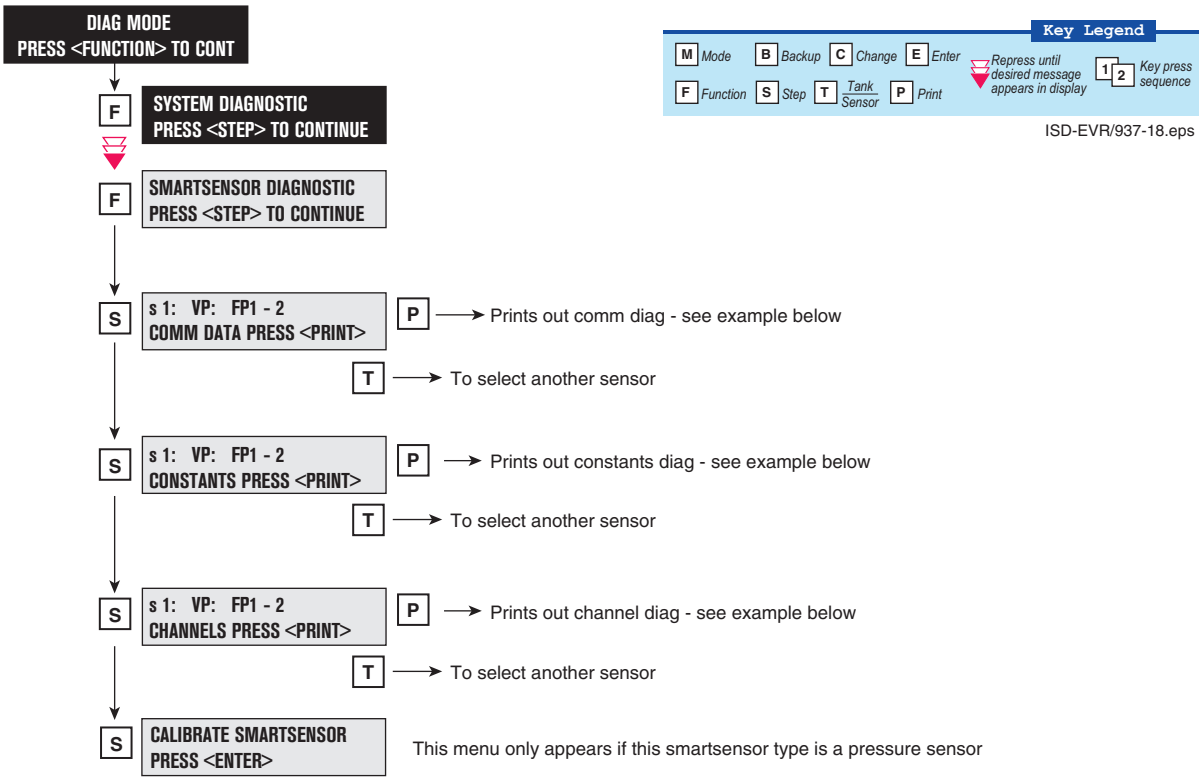


```
SS COMM DIAG
-----------------------
s 1: AFM1   FP1-2
SAMPLES READ     58
SAMPLES USED     54
PARITY ERR        0
PARTIAL READ      0
COMM ERR          0
RESTARTS          0
```

```
SS CONSTANTS DIAG
-----------------------
s 1: AFM1   FP1-2

VAPOR PRESSURE
SERIAL NUMBER      1007
PROTOCOL VERSION      0
```

```
SS CHANNEL DIAG
-----------------------
s 1: AFM1   FP1-2
YY-MM-DD  HH:MM:SS
C00 B50B 3D68 00E0 0000
C04 0000 03EF 0000 0004
C08 0A3C 3D68 5693 0081
C12 80C4 80A4 0104 2579
C16 0000 0000 00A3 03D6
C20 0709 0032 04C9 880F
```

Figure 46. Smart Sensor Diagnostic Menu

ISD Diagnostic Menu

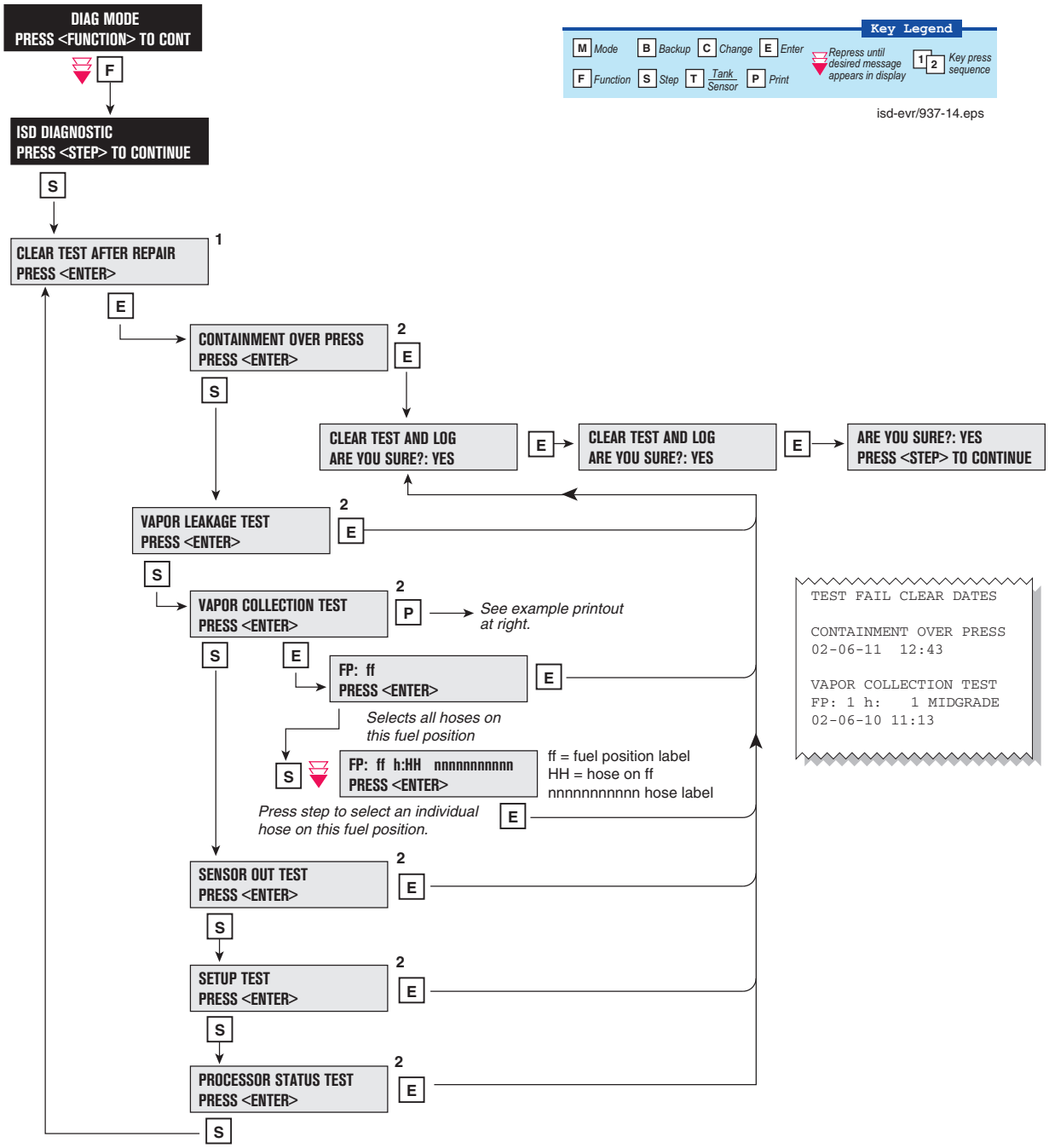

Notes:

1. All repair dates are saved in the Miscellaneous Event Log.
2. Reference the Clear Test Repair Menu table on the next page.

Figure 47. ISD Diagnostic Menu

Table 7. Clear Test Repair Menu

Menu Selection	Clears Alarms	Reset Dates
Containment Over Press	ISD GROSS PRESSURE WARN ISD GROSS PRESSURE FAIL ISD DEGRD PRESSURE WARN ISD DEGRD PRESSURE FAIL ISD VP PRESSURE WARN ISD VP PRESSURE FAIL	Containment Test Time
Vapor Leakage Test	ISD VAPOR LEAKAGE WARN ISD VAPOR LEAKAGE FAIL	Vapor Leak Test Time
Vapor Collection Test	GROSS COLLECT WARN GROSS COLLECT FAIL DEGRD COLLECT WARN DEGRD COLLECT FAIL FLOW COLLECT WARN FLOW COLLECT FAIL AIRFLOW MTR SETUP	Hose Test Time
Sensor Out Test	ISD SENSOR OUT WARN ISD SENSOR OUT FAIL	Sensor Out Test Time
Setup Test	ISD SETUP WARN ISD SETUP FAIL	Setup Self Test Time
Processor Status Test	ISD VP STATUS WARN ISD VP STATUS FAIL VP EMISSIONS WARN VP EMISSIONS FAIL VP DUTY CYCLE WARN VP DUTY CYCLE FAIL	Valid Vapor Processor Test Time

VST ECS Membrane Processor Diagnostic Menu

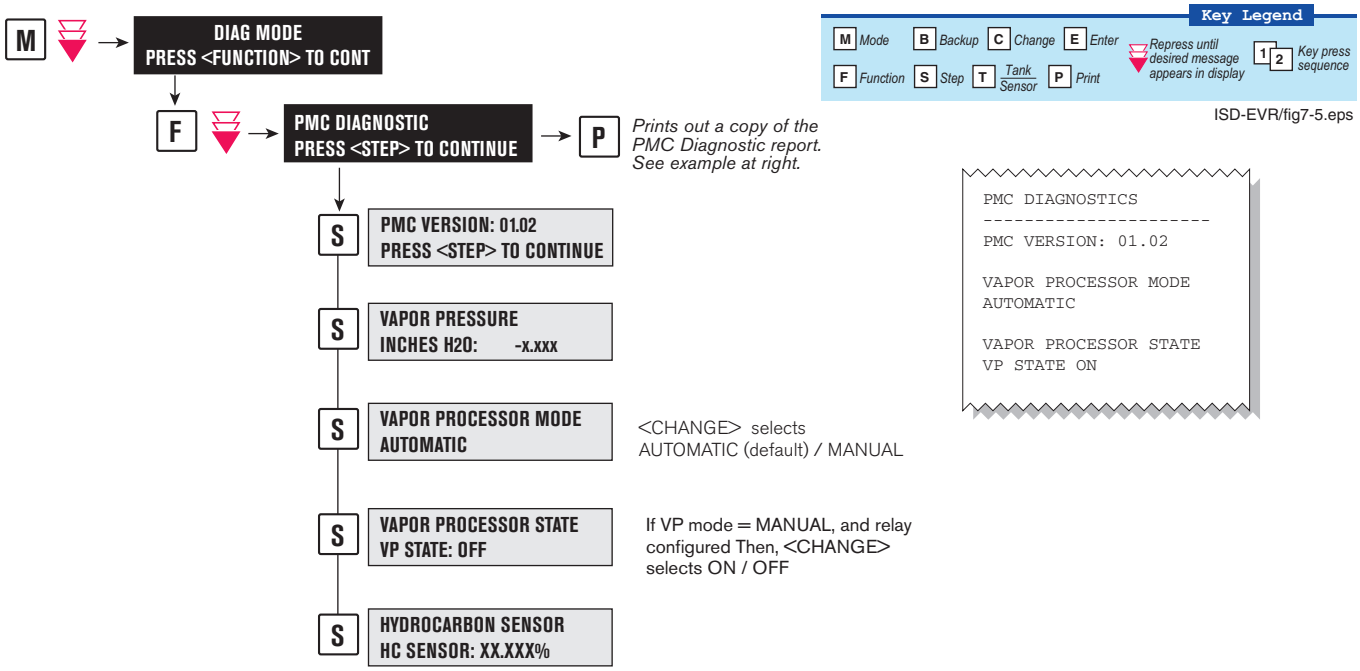

Figure 48. VST ECS Membrane Processor Diagnostic Menu

Veeder-Root Vapor Polisher Diagnostics

AUTOMATIC CONTROL

If PMC mode is in AUTOMATIC, PMC will control flow through the canister using a vapor control valve. The control algorithms will monitor tank pressure, vapor temperature and carbon temperature to monitor carbon canister loading. When the pressure is positive the valve is opened to relieve the pressure and begin loading the canister. When the UST pressure becomes negative the valve is opened and the purging process begins. The valve will close when the canister has either reached capacity or the canister is empty after purging.

MANUAL CONTROL

If PMC mode is in MANUAL, the diagnostic menu allows the valve to be opened (ON) or closed (OFF) manually. This feature is to support testing operation of the valve without waiting for canister to reach loading or purging thresholds. It also provides the necessary controls to perform 2" decay tests. The current UST ullage space vapor pressure will also be available through the diagnostic menu.

Veeder-Root Vapor Polisher PMC Diagnostic Menu

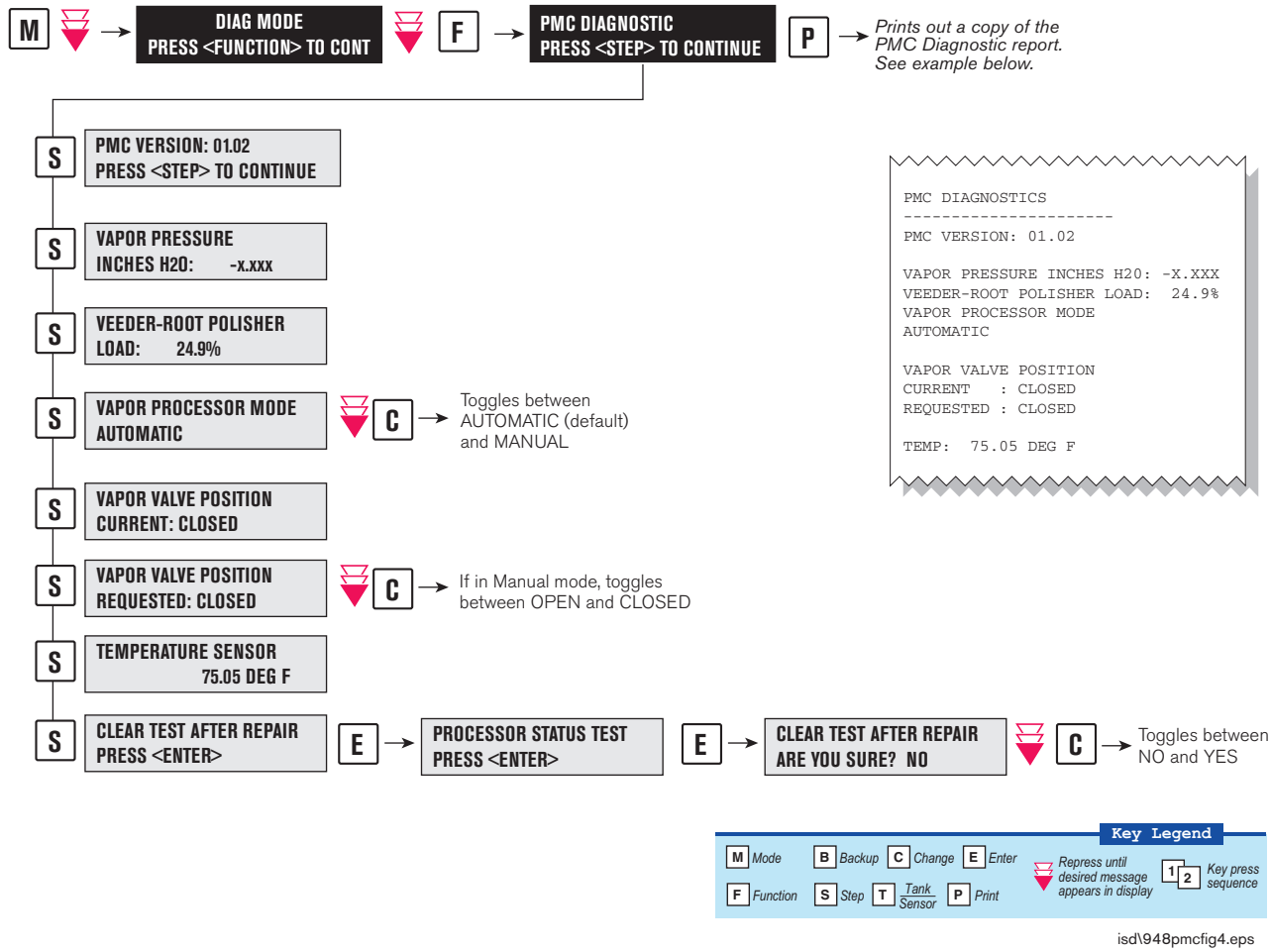

Figure 49. PMC Diagnostic Menus

Appendix A: Site EVR/ISD Equipment Location Worksheet

You should create a table listing each hose, fueling point, Air Flow Meter's serial number, etc.. This information will be required when you perform the EVR/ISD Setup hose/meter dispenses. This appendix contains blank worksheets for sites with single- and multi-hose dispensers. You are advised to fill in all of the appropriate information about your installed equipment, complete the TLS console's EVR/ISD setup, then perform the Product Meter ID dispensing procedure.

Single-Hose Fueling Position Dispensers

FILL OUT - USE TO SETUP HOSE TABLE					AUTOMAP CHECK LIST			
					Product Dispense(s)[6]			
Hose ID[1]	FP[2]	Hose Label[3]	AFM Serial Number[4]	AFM Label[5]	1st	2nd	3rd	4th
1		Blend		AFM FP__&__				
2		Blend						
3		Blend		AFM FP__&__				
4		Blend						
5		Blend		AFM FP__&__				
6		Blend						
7		Blend		AFM FP__&__				
8		Blend						
9		Blend		AFM FP__&__				
10		Blend						
11		Blend		AFM FP__&__				
12		Blend						
13		Blend		AFM FP__&__				
14		Blend						
15		Blend		AFM FP__&__				
16		Blend						

[1]Each hose must have a unique number (1 - 99).

[2]This is the Fuel Position Label which is the visible number on the outside of the dispenser (1 -2 digits).

[3]The hose label is always Blend for single-hose dispensers.

[4]This is the serial number on the Air Flow Meter (1 per dispenser).

[5]This is the AFM label entered in EVR/ISD setup (1 per dispenser and must be in the format shown, e.g., AFM FP1&2 - *where 1 and 2 refer to the one [or two] numbers on the outside of the dispenser*).

[6]After you have entered the contents of columns 1 - 5 into the TLS EVR/ISD hose table setup, you now must follow automap procedure and dispense from each gas meter AND one blend grade that feeds each hose. Enter a check beneath each product following a dispense from the hose.

FILL OUT - USE TO SETUP HOSE TABLE					AUTO MAP CHECK LIST			
					Product Dispense(s)			
Hose ID	FP	Hose Label	AFM Serial Number	AFM Label	1st	2nd	3rd	4th
17		Blend		AFM FP__&__				
18		Blend						
19		Blend		AFM FP__&__				
20		Blend						
21		Blend		AFM FP__&__				
22		Blend						
23		Blend		AFM FP__&__				
24		Blend						
25		Blend		AFM FP__&__				
26		Blend						
27		Blend		AFM FP__&__				
28		Blend						
29		Blend		AFM FP__&__				
30		Blend						
31		Blend		AFM FP__&__				
32		Blend						
33		Blend		AFM FP__&__				
34		Blend						
35		Blend		AFM FP__&__				
36		Blend						

FILL OUT - USE TO SETUP HOSE TABLE					AUTO MAP CHECK LIST			
					Product Dispense(s)			
Hose ID	FP	Hose Label	AFM Serial Number	AFM Label	1st	2nd	3rd	4th
		Blend		AFM FP__&__				
		Blend						
		Blend		AFM FP__&__				
		Blend						
		Blend		AFM FP__&__				
		Blend						
		Blend		AFM FP__&__				
		Blend						
		Blend		AFM FP__&__				
		Blend						
		Blend		AFM FP__&__				
		Blend						
		Blend		AFM FP__&__				
		Blend						
		Blend		AFM FP__&__				
		Blend						
		Blend		AFM FP__&__				
		Blend						
		Blend		AFM FP__&__				
		Blend						
		Blend		AFM FP__&__				
		Blend						
		Blend		AFM FP__&__				
		Blend						
		Blend		AFM FP__&__				
		Blend						
		Blend		AFM FP__&__				
		Blend						

Multi-Hose Fueling Position Dispensers

FILL OUT - USE TO SETUP HOSE TABLE					AUTOMAP CHECK LIST
Hose ID[1]	FP[2]	Hose Label[3]	AFM Serial Number[4]	AFM Label[5]	Product Dispense[6]
				AFM FP__&__	
				AFM FP__&__	

[1]Each hose must have a unique number (1 - 99).

[2]This is the Fuel Position Label which is the visible number on the outside of the dispenser (1 -2 digits).

[3]The hose label is the grade.

[4]This is the serial number on the Air Flow Meter (1 per dispenser).

[5]This is the AFM label entered in EVR/ISD setup (1 per dispenser and must be in the format shown, e.g., AFM FP1&2 - *where 1 and 2 refer to the one [or two] numbers on the outside of the dispenser*).

[6]After you have entered the contents of columns 1 - 5 into the TLS EVR/ISD hose table setup, you now must follow automap procedure and dispense from each hose. Enter a check in this column following a dispense from the hose.

FILL OUT - USE TO SETUP HOSE TABLE					AUTOMAP CHECK LIST
Hose ID	**FP**	**Hose Label**	**AFM Serial Number**	**AFM Label**	**Product Dispense**
				AFM FP__&__	
				AFM FP__&__	
				AFM FP__&__	

FILL OUT - USE TO SETUP HOSE TABLE					AUTOMAP CHECK LIST
Hose ID	**FP**	**Hose Label**	**AFM Serial Number**	**AFM Label**	**Product Dispense**
				AFM FP__&__	
				AFM FP__&__	
				AFM FP__&__	

FILL OUT - USE TO SETUP HOSE TABLE					AUTOMAP CHECK LIST
Hose ID	**FP**	**Hose Label**	**AFM Serial Number**	**AFM Label**	**Product Dispense**
				AFM FP__&__	
				AFM FP__&__	
				AFM FP__&__	

FILL OUT - USE TO SETUP HOSE TABLE					AUTOMAP CHECK LIST
Hose ID	**FP**	**Hose Label**	**AFM Serial Number**	**AFM Label**	**Product Dispense**
				AFM FP__&__	
				AFM FP__&__	
				AFM FP__&__	

Appendix B: ISD Operability Test Procedure Data Forms

Use these forms to check off and record the results from the ISD Operability Testing procedure steps.

Form 1

Data Form for Vapor Pressure Sensor UST Pressure Test

DATE OF TEST _____

SERVICE COMPANY NAME	SERVICE COMPANY'S TELEPHONE
SERVICE TECHNICIAN	SST or VEEDER-ROOT TECH CERTIFICATION # (as applicable) ICC or DISTRICT TRAINING CERTIFICATION (as applicable)
STATION NAME	DISTRICT PERMIT #
STATION ADDRESS CITY	STATE ZIP

PRESSURE SENSOR LOCATION: DISPENSER FUELING POINT (FP) NUMBERS	FP #_____	PRESSURE SENSOR SERIAL NUMBER: _____

STEP 3	DIGITAL MANOMETER VALUE _____ inches WC
STEP 3	TLS 350 SENSOR VALUE _____ inches WC (OBTAIN VALUE USING TLS CONSOLE KEYPAD SEQUENCE SHOWN IN FIG. 4-4, STEP 7)
STEP 4	TLS 350 Sensor Value within ±0.2 inches WC of Digital Manometer Value? Yes ☐ No ☐ IF NO: THE PRESSURE SENSOR IS NOT IN COMPLIANCE WITH THE PRESSURE SENSOR REQUIREMENTS.
STEP 5	MODE KEY PRESSED TO EXIT CALIBRATE SMART SENSOR MENU? ☐

Form 2

Data Form for Vapor Pressure Sensor Ambient Reference Test

DATE OF TEST _____

SERVICE COMPANY NAME		SERVICE COMPANY'S TELEPHONE	
SERVICE TECHNICIAN		SPQ or VEEDER-ROOT TECH CERTIFICATION # (as applicable) ICC or DISTRICT TRAINING CERTIFICATION (as applicable)	
STATION NAME		DISTRICT PERMIT #	
STATION ADDRESS	CITY	STATE	ZIP
STEP 1	PRESSURE SENSOR LOCATION: DISPENSER FUELING POINT (FP) NUMBERS FP # _____	PRESSURE SENSOR SERIAL NUMBER:_____	
STEP 2	REFERENCE PORT CAP REMOVED? VALVE SET TO AMBIENT REFERENCE PORT (PER FIG. 4-3)?	☐ ☐	
STEP 3	NON-CALIBRATED SENSOR VALUE _____Inches WC (OBTAIN VALUE USING TLS CONSOLE KEYPAD SEQUENCE SHOWN IN FIG. 4-4, STEP 7)		
STEP 4	PRESSURE BETWEEN +0.20 & -0.20? Yes ☐ No ☐ IF NO: THE PRESSURE SENSOR IS NOT IN COMPLIANCE WITH THE PRESSURE SENSOR REQUIREMENTS.		
STEP 5	REFERENCE PORT CAP REPLACED? VALVE SET TO NORMAL VALVE POSITION (PER FIG 4-3)?	☐ ☐	
STEP 6	MODE KEY PRESSED TO EXIT CALIBRATE SMART SENSOR MENU?	☐	

Operability Test Procedure Data Worksheet

Veeder-Root In-Station Diagnostics (ISD)
Balance Vapor Flow Meter Operability Test Procedure

		Date of Test
Service Company Name		Service Company's Telephone
Service Technician		Veeder-Root Tech Certification #
Station Name		District Permit #
Station Address	City	State Zip

		ISD Flow Meter Total			Gas Flow Meter Total						
0	0	08	4.13	4.15	4.9	4.12	4.12	4.13	4.15		
Meter SN	Fueling Pos	Start	Stop	Difference Gal (Stop – Start)	Start	Stop	Difference Cubic Feet (Stop – Start)	Cubic feet To gallons[1]	% Diff [2]	Pass	Fail

[1] $Gallons = CubicFeet \times 7.481$

[2] $\%Diff = \frac{ISDDiffGal - GasFlowMeterDiffGal}{GasFlowMeterDiffGal} \times 100$

Site Shutdown Test Data Form

DATE OF TEST _____

SERVICE COMPANY NAME	SERVICE COMPANY'S TELEPHONE
SERVICE TECHNICIAN	VEEDER-ROOT TECH CERTIFICATION #
STATION NAME	DISTRICT PERMIT #
STATION ADDRESS CITY ST ATE ZIP	

STEP 1.	POWER REMOVED FROM TLS CONSOLE?	☐
STEP 2.	POWER TO SUBMERSIBLE PUMPS REMOVED BY TLS? (VERIFY GASOLINE FUELING DISABLED)	☐
STEP 3.	POWER RESTORED TO TLS CONSOLE?	☐

COMMENTS (INCLUDE DESCRIPTION OF REPAIRS MADE)

VEEDER-ROOT

For technical support, sales or other assistance, please visit:
www.veeder.com

Pressure Sensor

Installation Guide

VEEDER-ROOT

Notice

Veeder-Root makes no warranty of any kind with regard to this publication, including, but not limited to, the implied warranties of merchantability and fitness for a particular purpose.

Veeder-Root shall not be liable for errors contained herein or for incidental or consequential damages in connection with the furnishing, performance, or use of this publication.

Veeder-Root reserves the right to change system options or features, or the information contained in this publication.

This publication contains proprietary information which is protected by copyright. All rights reserved. No part of this publication may be modified or translated to another language without the prior written consent of Veeder-Root.

DAMAGE CLAIMS / LOST EQUIPMENT

Thoroughly examine all components and units as soon as they are received. If any cartons are damaged or missing, write a complete and detailed description of the damage or shortage on the face of the freight bill. The carrier's agent must verify the inspection and sign the description. Refuse only the damaged product, not the entire shipment.

VEEDER-ROOT'S PREFERRED CARRIER

1. Contact VR Customer Service at 800-873-3313 with the specific part numbers and quantities that were missing or received damaged.
2. Fax signed Bill of Lading (BOL) to VR Customer Service at 800-234-5350.
3. VR will file the claim with the carrier and replace the damaged/missing product at no charge to the customer. Customer Service will work with production facility to have the replacement product shipped as soon as possible.

CUSTOMER'S PREFERRED CARRIER

1. It is the customer's responsibility to file a claim with their carrier.
2. Customer may submit a replacement purchase order. Customer is responsible for all charges and freight associated with replacement order. Customer Service will work with production facility to have the replacement product shipped as soon as possible.
3. If "lost" equipment is delivered at a later date and is not needed, VR will allow a Return to Stock without a restocking fee.
4. VR will NOT be responsible for any compensation when a customer chooses their own carrier.

RETURN SHIPPING

For the parts return procedure, please follow the appropriate instructions in the "General Returned Goods Policy" and "Parts Return" pages in the "Policies and Literature" section of the Veeder-Root **North American Environmental Products** price list.

©Veeder-Root 2008. All rights reserved.

Pressure Sensor Installation

Contractor Certification Requirements 17-1
Related Manuals 17-1
Safety Precautions 17-1
Before You Begin 17-2
Veeder-Root Parts 17-3
Tools Required 17-3
Installation Steps 17-4

Figures

Figure 17-1. Example Pressure Sensor Install - Non-ISD Installation (without Vapor Flow Meter) 17-5
Figure 17-2. Example Pressure Sensor Install - ISD Installation (with Vapor Flow Meter) 17-6
Figure 17-3. Field wiring Pressure Sensor - Observe Polarity 17-6
Figure 17-4. Epoxy sealing field wiring 17-7
Figure 17-5. Connecting Pressure Sensor to TLS-3XX Smart Sensor Interface Module 17-8

Tables

Table 17-1. Sensor Installation Kit (P/N 330020-433) 17-3

Pressure Sensor Installation

This manual contains instructions to install a Veeder-Root (In-Station Diagnostic) Pressure Sensor in a dispenser's vapor return line.

This manual assumes all preliminary site preparation is completed, and that wiring from the console to the Pressure Sensor junction box is in place and meets the requirements set out in the console's Site Prep manual.

Contractor Certification Requirements

Veeder-Root requires the following minimum training certifications for contractors who will install and setup the equipment discussed in this manual:

Level 1 Contractors holding valid Level 1 Certification are approved to perform wiring and conduit routing, equipment mounting, probe and sensor installation, tank and line preparation, and line leak detector installation.

Level 2/3 or 4 Contractors holding valid Level 2, 3, or 4 Certifications are approved to perform installation checkout, startup, programming and operations training, troubleshooting and servicing for all Veeder-Root Tank Monitoring Systems, including Line Leak Detection and associated accessories.

Warranty Registrations may only be submitted by selected Distributors.

Related Manuals

576013-879 TLS-3XX Series Consoles Site Prep and Installation Manual

VST-IOM / Section 16 / VR-204 In-Station Diagnostics (ISD) Install, Setup, & Operation Manual

Safety Precautions

The following safety symbols may be used throughout this manual to alert you to important safety hazards and precautions.

	EXPLOSIVE Fuels and their vapors are extremely explosive if ignited.		**FLAMMABLE** Fuels and their vapors are extremely flammable.
	ELECTRICITY High voltage exists in, and is supplied to, the device. A potential shock hazard exists.		**TURN POWER OFF** Live power to a device creates a potential shock hazard. Turn Off power to the device and associated accessories when servicing the unit.
	READ ALL RELATED MANUALS Knowledge of all related procedures before you begin work is important. Read and understand all manuals thoroughly. If you do not understand a procedure, ask someone who does.		**USE SAFETY BARRICADES** Unauthorized people or vehicles in the work area are dangerous. Always use safety cones or barricades, safety tape, and your vehicle to block the work area.

⚠ WARNING

This product is to be installed and operated in the highly combustible environment of a gasoline dispenser where flammable liquids and explosive vapors may be present.

Improper installation could cause damage to property, environment resulting in serious injury or death.

The following hazards exist:

1. **Electrical shock resulting in serious injury or death may result if power is on during installation and the device is improperly installed.**
2. **Product leakage could cause severe environmental damage or explosion resulting in death, serious personal injury, property loss and equipment damage.**

Observe the following precautions:

1. **Read and follow all instructions in this manual, including all safety warnings.**
2. **To be installed in accordance with the National Electrical Code, NFPA 70 and the Automotive And Marine Service Station Code, NFPA 30A.**
3. **Before installing this device, turn Off, tag/lock out power to the system, including console and submersible pumps.**
4. **To protect yourself and others from being struck by vehicles, block off your work area during installation or service.**
5. **Substitution of components may impair intrinsic safety.**

Before You Begin

- A level 1 or higher certified Veeder-Root Technician must be on site to assist in this type of installation.
- Comply with all recommended safety practices identified by OSHA (Occupational Safety and Health Administration) and your employer.
- Review and comply with all the safety warnings in the installation manuals and any other national, State or Local requirements.
- A 2-conductor, 18 AWG shielded cable must be installed in intrinsically safe conduit from the dispenser to the TLS console.
- The Pressure Sensor must be installed in a VERTICAL position with the sensing port pointing down, and its connection to the vapor return line must be made BELOW the vapor return line shear valve in the base of the dispenser.
- For all connections requiring sealant, use only yellow Gas/TFE teflon tape.

Veeder-Root Parts

Veeder-Root parts and kits required to install the Pressure Sensor are listed in Table 17-1.

Table 17-1. Sensor Installation Kit (P/N 330020-433)

Item	Qty.	Description	P/N
1	1	Pressure sensor	331946-001
2	4	Male connector 68CA-4-4, brass 1/4” tube to 1/4” pipe	514100-430
3	1	Union 62CA-4, brass 1/4” tube size	514100-431
4	1	Plug 59CA-4, brass 1/4” tube size	514100-432
5	1	Universal sensor mounting kit - miscellaneous assortment of U-bolts, brackets, clamps, and fasteners	330020-012
6	2	Wire nut	576008-461
7	1	Sealing pack	514100-304
8	1	Cord grip	331028-011
9	2	Tie wrap	510901-337
10	1	Shim	332061-001
11	1	Ball Valve, 3-way, 1/4”	576008-649
12	1	Copper tube, soft, 1/4” OD, 36” length	332151-001

Tools Required

1. Wrenches suitable for tightening tubing fittings.
2. Necessary pipe fitter’s equipment and a non-hazardous work space suitable to modify the dispenser vapor line for Pressure Sensor installation.

Installation Steps

1. Before installing this device, turn Off, tag/lock out power to the system, including console and submersible pumps.
2. Determine which dispenser is closest to the tank being monitored. Remove that dispenser's lower sheet metal doors to gain access to the vapor plumbing.
3. Locate a suitable port or plumb a suitable "T" fitting in one of the locations listed below (listed in order of preference):
   a. The main vapor return line (see Figure 17-1 or Figure 17-2 as required) - this is the preferred position,
   b. In the vapor return line between shear valve and main vapor return line, or
   c. If a vapor flow meter is installed in the shear valve housing below the shear valve mechanism. Note: 1 to 2 ports are typically available on a shear valve. If you have to use one of these ports, make certain it accesses the plumbing below the valve mechanism.
4. Install one of the 68CA-4-4 male connectors (item 2 in Table 17-1) from the kit into the tapped hole.
5. Install Pressure Sensor (item 1 in Table 17-1) vertically to the dispenser frame or piping using the 2-inch conduit clamp, rubber shim, and necessary bolts, nuts, and washers from the included Universal Sensor Mounting kit. Wrap the rubber shim (item 10 in Table 17-1) around the sensor before inserting it into the clamp. Also make sure the sensor cable outlet is facing up and the pressure sensing port tube in the base of the sensor is facing down.
6. Attach one end of the 62CA-4 union (item 3 in Table 17-1) to the pressure sensing port in the base of the Pressure Sensor.
7. Install the remaining 68CA-4-4 male connectors (item 2 in Table 17-1) from the kit into each of the three ports in the 3-way calibration valve (item 13 in Table 17-1).
8. Measure, fabricate, and install a ¼" OD copper tube (item 12 in Table 17-1) that runs between the 62CA-4 union in the base of the sensor and the center port of the 3-way calibration valve.
9. Measure, fabricate, and install a ¼" OD copper tube that runs between the ¼" tube end of the male connector fitting installed beneath the shear valve and one of the two unused ports on the 3-way valve, being careful not to create any potential liquid traps.
10. Screw the 59CA-4 plug, item 4, from the kit onto the last port's male connector. Make sure the valve's handle is set to connect the sensor to the vapor return line and not to the capped (ambient) port.

    Important! All plumbing's pitch to drain should be 1/4" vertical per 12" horizontal to eliminate liquid traps.
11. Route the cable from Pressure Sensor to the Pressure Sensor junction box in the dispenser. Observing polarity, connect the sensor wiring to the field wiring from console and cap with wire nuts (see Figure 17-3).

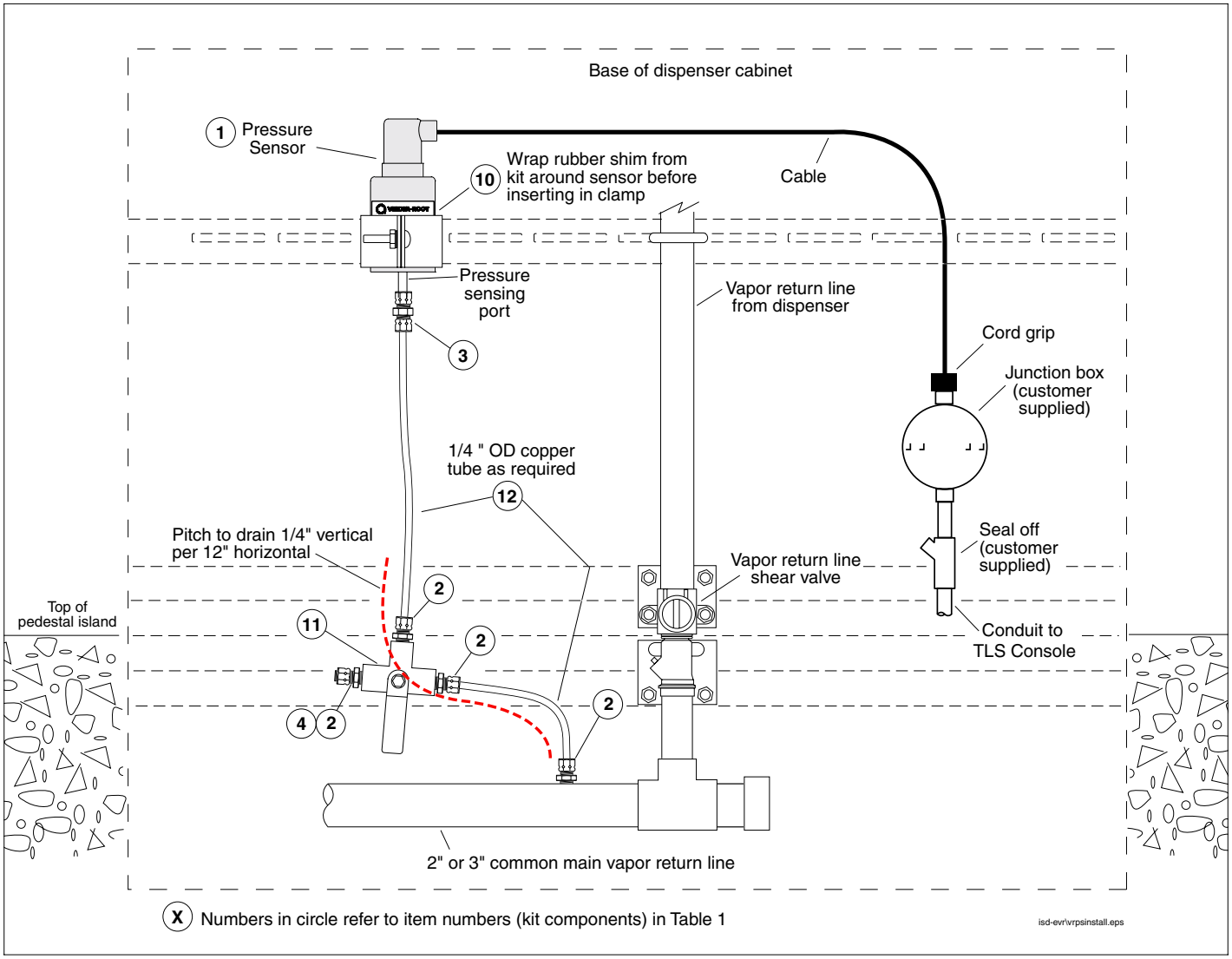

Figure 17-1. Example Pressure Sensor Install - Non-ISD Installation (without Vapor Flow Meter)

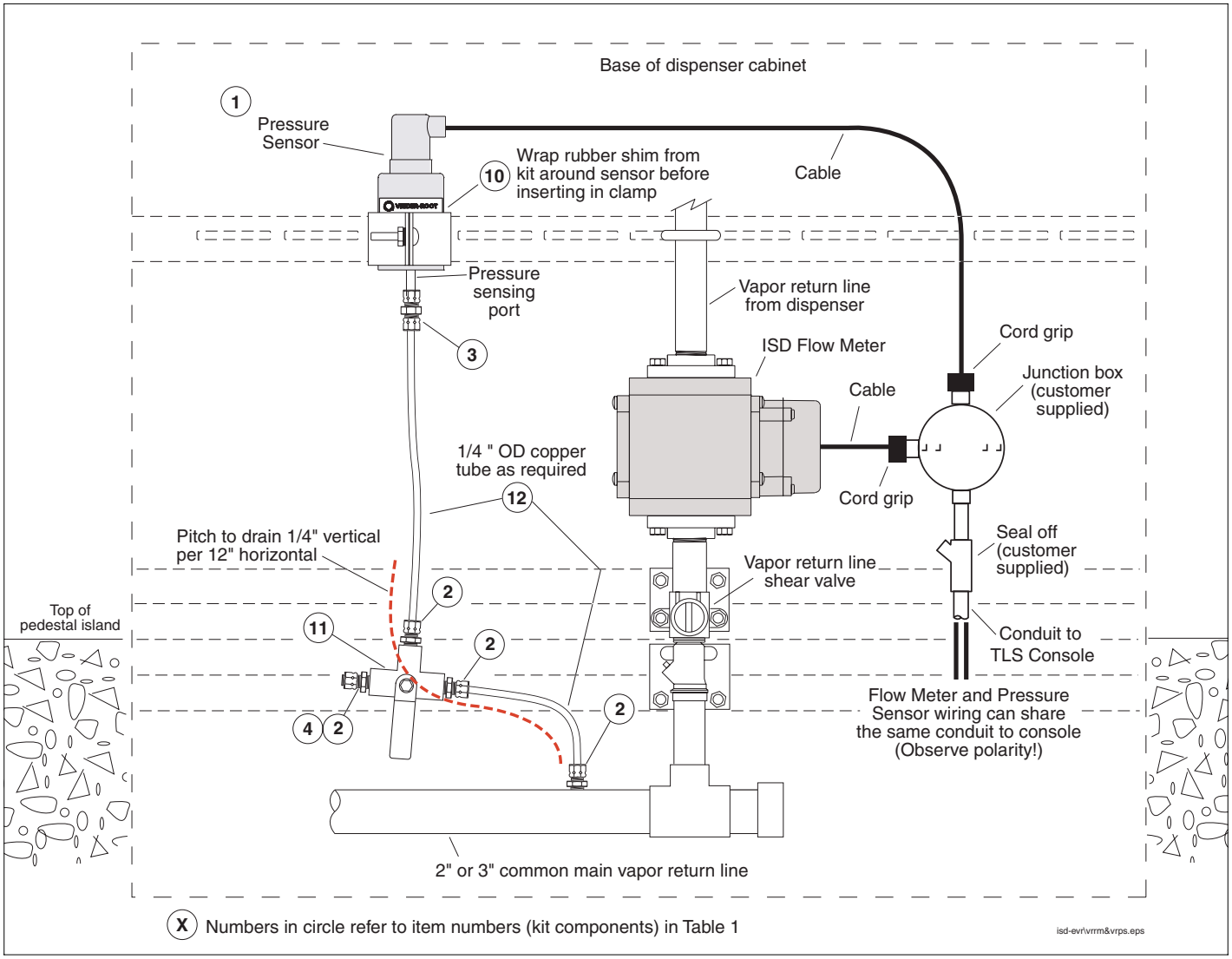

Figure 17-2. Example Pressure Sensor Install - ISD Installation (with Vapor Flow Meter)

.

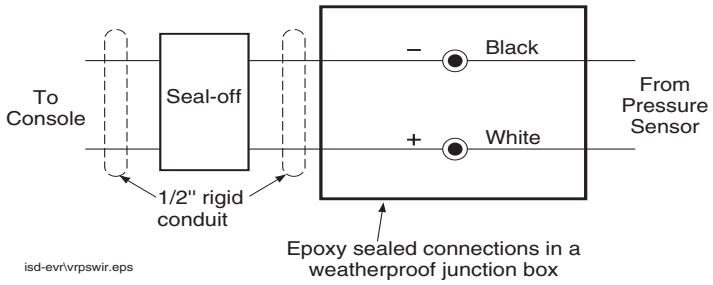

Figure 17-3. Field wiring Pressure Sensor - Observe Polarity

12. Seal wire nuts in epoxy sealant following the instructions in Figure 17-4.

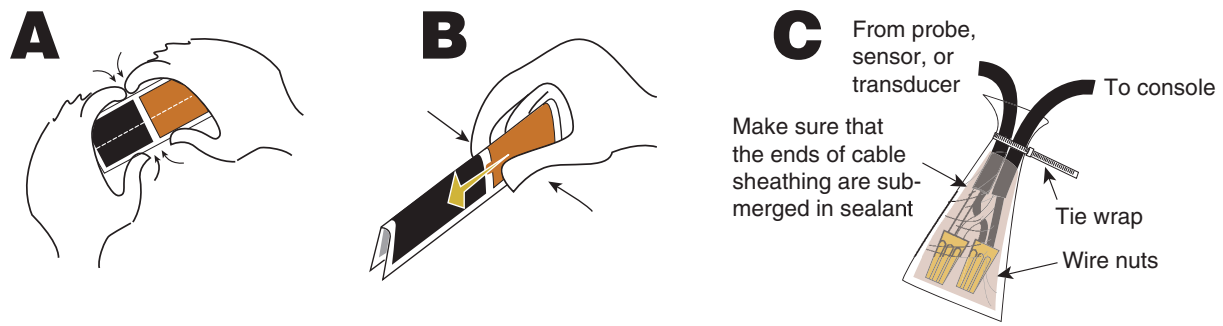

Instructions:

NOTE: When temperature is below 50˚F (10˚C), keep resin in a warm place prior to mixing (e.g., in an inside pocket next to body).

1. Open epoxy sealant package, and remove resin pak.
2. Holding resin pak as shown in A, bend pak along long length.
3. As shown in B, firmly squeeze the RED SIDE of the resin, forcing it through the center seal and into BLACK SIDE.
4. Mix thoroughly to a uniform color by squeezing contents back and forth 25-30 times.
5. Squeeze mixed, warm resin into one end of bag and cutoff other end.
6. Slowly insert wiring connections into sealing pack until they fit snugly against the opposite end as shown in C.
7. Twist open end of bag and use tie wrap to close it off and position the tie wrapped end up until the resin jells.

CAUTION: Epoxy sealant is irritating to eyes, respiratory system, and skin. Can cause allergic skin reaction. Contains: epoxy resin and Cycloaliphatic epoxycarboxylate.

Precautions: Wear suitable protective clothing, gloves, eye, and face protection. Use only in well ventilated areas. Wash thoroughly before eating, drinking, or smoking.

consoles\epxy2w.eps

Figure 17-4. Epoxy sealing field wiring

13. Push the epoxy sealed bag into the junction box. Replace and tighten the junction box cover.

14. Terminate field wiring into TLS Console and connect to Smart Sensor Module (TLS-3XX - Figure 17-5). Note: observe polarity! The cable length between the console and sensor must not exceed the distance stated in the TLS-3XX Site Prep manual (P/N 576013-879).

    Note: Intrinsically safe devices must be installed in accordance with Article 504 of the National Electrical Code, ANSI/NFPA 70, for installation in the United States, or Section 18 of the Canadian Electrical Code for installations in Canada.

    This intrinsically safe Pressure Sensor P/N 331946-001, has only been evaluated for connection to a UL listed TLS-3XX Liquid Level Gauge / Leak Detector.

    Conductors of different intrinsically safe circuits run in the same cable/conduit must have at least 0.01 inch (0.25 mm) of insulation.

15. After the Pressure Sensor is installed, pressurize the tank ullage space and vapor piping to at least 2 inches WC and test for leaks using leak detection solution.

16. Replace lower dispenser sheet metal doors onto dispensers.

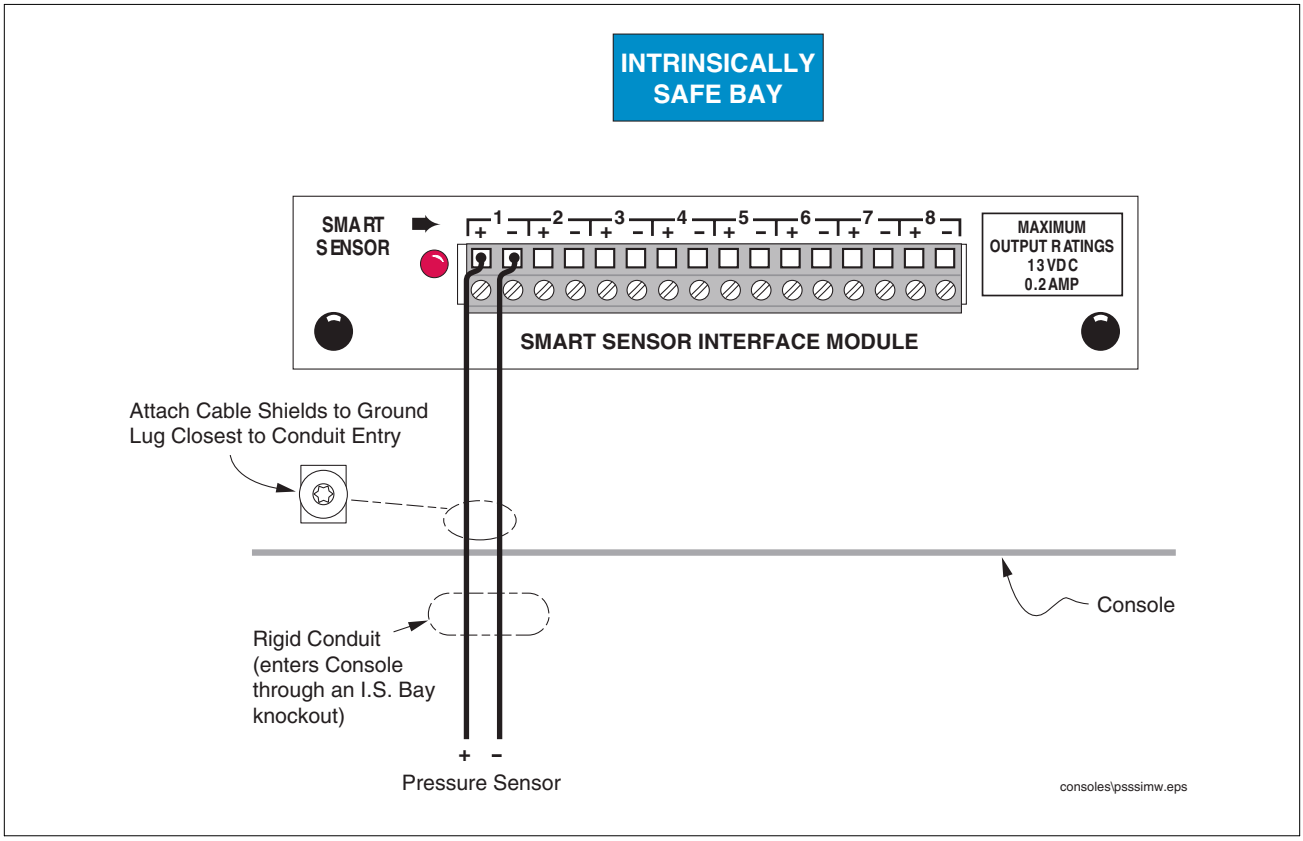

Figure 17-5. Connecting Pressure Sensor to TLS-3XX Smart Sensor Interface Module

VEEDER-ROOT

For technical support, sales or other assistance, please visit:
www.veeder.com

Carbon Canister Vapor Polisher

Installation and Maintenance Guide

VEEDER-ROOT

Notice

Veeder-Root makes no warranty of any kind with regard to this publication, including, but not limited to, the implied warranties of merchantability and fitness for a particular purpose.

Veeder-Root shall not be liable for errors contained herein or for incidental or consequential damages in connection with the furnishing, performance, or use of this publication.

Veeder-Root reserves the right to change system options or features, or the information contained in this publication as approved by ARB.

This publication contains proprietary information which is protected by copyright. All rights reserved. No part of this publication may be modified or translated to another language without the prior written consent of Veeder-Root.

Contact TLS Systems Technical Support for additional troubleshooting information at 800-323-1799.

DAMAGE CLAIMS / LOST EQUIPMENT

Thoroughly examine all components and units as soon as they are received. If any cartons are damaged or missing, write a complete and detailed description of the damage or shortage on the face of the freight bill. The carrier's agent must verify the inspection and sign the description. Refuse only the damaged product, not the entire shipment.

Veeder-Root must be notified of any damages and/or shortages within 30 days of receipt of the shipment, as stated in our Terms and Conditions.

VEEDER-ROOT'S PREFERRED CARRIER

1. Contact Veeder-Root Customer Service at 800-873-3313 with the specific part numbers and quantities that were missing or received damaged.
2. Fax signed Bill of Lading (BOL) to Veeder-Root Customer Service at 800-234-5350.
3. Veeder-Root will file the claim with the carrier and replace the damaged/missing product at no charge to the customer. Customer Service will work with production facility to have the replacement product shipped as soon as possible.

CUSTOMER'S PREFERRED CARRIER

1. It is the customer's responsibility to file a claim with their carrier.
2. Customer may submit a replacement purchase order. Customer is responsible for all charges and freight associated with replacement order. Customer Service will work with production facility to have the replacement product shipped as soon as possible.
3. If "lost" equipment is delivered at a later date and is not needed, Veeder-Root will allow a Return to Stock without a restocking fee.
4. Veeder-Root will NOT be responsible for any compensation when a customer chooses their own carrier.

RETURN SHIPPING

For the parts return procedure, please follow the appropriate instructions in the "General Returned Goods Policy" pages in the "Policies and Literature" section of the Veeder-Root **North American Environmental Products** price list. Veeder-Root will not accept any return product without a Return Goods Authorization (RGA) number clearly printed on the outside of the package.

FOR INSTALLATIONS IN THE STATE OF CALIFORNIA

Please refer to the California Air Resources Board Vapor Recovery Certification Phase II EVR Executive Order web site (*www.arb.ca.gov/vapor/eo-evrphaseII.htm*) for the latest manual revisions pertaining to Executive Order VR 203 (VST Phase II EVR System) and VR 204 (VST Phase II EVR System Including ISD System).

©Veeder-Root 2008. All rights reserved.

Introduction

Contractor Certification Requirements 1
Related Manuals 1
Safety Precautions 1
Before You Begin 2
Veeder-Root Parts 3

Installation Procedure 4

Maintenance

Ambient Temperature Sensor Assembly Replacement (P/N 332796-001) 10
Vapor Valve Filter Replacement (P/N 332901-001) 11
Vapor Valve Assembly Replacement ((P/N 332672-002) 12
Canister Thermal Probe Replacement (P/N 332923-018) 14

Figures

Figure 1. Typical direct wired installation example 5
Figure 2. Installing CCVP onto bracket 6
Figure 3. Canister reference dimensions and clearances 7
Figure 4. Locating the CCVP vapor valve connector.....8
Figure 5. Field wiring CCVP vapor valve.....8
Figure 6. Epoxy sealing CCVP vapor valve field wiring connections 9
Figure 7. Attaching CCVP vapor valve wiring to TLS-350 Console.....9
Figure 8. Remove Ambient Temperature Sensor assembly.....10
Figure 9. Replacing Ambient Temperature Sensor Assembly.....10
Figure 10. Accessing the valve filter and o-ring.....11
Figure 11. Replacing the valve filter and o-ring.....11
Figure 12. Removing Vapor Valve assembly 12
Figure 13. Replacing Vapor Valve assembly and Shuttle Connector.....13
Figure 14. CCVP Thermal Probe.....14

Tables

Table 1. CCVP 2” Installation Kit 3
Table 2. CCVP 3” Installation Kit 3
Table 3. CCVP Piping Group Kits 3

Introduction

This manual contains instructions to install a Veeder-Root Carbon Canister Vapor Polisher (CCVP) into a gasoline tank vent pipe.

Contractor Certification Requirements

Veeder-Root requires the following minimum training certifications for contractors who will install and setup the equipment discussed in this manual:

Installer (Level 1) Certification: Contractors holding valid Installer Certification are approved to perform wiring and conduit routing; equipment mounting; probe, sensor and carbon canistor vapor polisher installation; tank and line preparation; and line leak detector installation.

TLS-350 Technician (Level 2/3 or 4) Certification: Contractors holding valid TLS-350 Technician Certifications are approved to perform installation checkout, startup, programming and operations training, troubleshooting and servicing for all Veeder-Root TLS-300 or TLS-350 Series Tank Monitoring Systems, including Line Leak Detection and associated accessories.

In-Station Diagnostics (ISD-PMC) Technician Certification: ISD PMC Contractors holding a valid ISD/PMC Certification are approved to perform (ISD/PMC) installation checkout, startup, programming, and operations training. This training also includes troubleshooting and service techniques for the Veeder-Root In-Station Diagnostics system. A current Veeder-Root Technician Certification is a prerequisite for the ISD/PMC course.

Veeder-Root ISD/PMC Including Carbon Canister Vapor Polisher Contractor Certification: This Certification includes Executive Orders 203, 204 and the Veeder-Root Vapor Polisher. This certification is required for setup and service of the Veeder-Root Vapor Polisher.

Warranty Registrations may only be submitted by selected Distributors.

Related Manuals

576013-879 TLS-3XX Series Consoles Site Prep Manual

577013-949 In-Station Diagnostics Install, Setup & Operation Manual

577013-948 Pressure Management Control Install, Setup and Operation Manual

576013-858 Direct Burial Cable Installation Guide

Safety Precautions

The following safety symbols may be used throughout this manual to alert you to important safety hazards and precautions.

EXPLOSIVE
Fuels and their vapors are extremely explosive if ignited.

FLAMMABLE
Fuels and their vapors are extremely flammable.

	ELECTRICITY High voltage exists in, and is supplied to, the device. A potential shock hazard exists.		**TURN POWER OFF** Live power to a device creates a potential shock hazard. Turn Off power to the device and associated accessories when servicing the unit.
	READ ALL RELATED MANUALS Knowledge of all related procedures before you begin work is important. Read and understand all manuals thoroughly. If you do not understand a procedure, ask someone who does.		**USE SAFETY BARRICADES** Unauthorized people or vehicles in the work area are dangerous. Always use safety cones or barricades, safety tape, and your vehicle to block the work area.
	WARNING Heed the adjacent instructions to avoid damage to equipment, property, environment or personal injury.		**WEAR EYE PROTECTION** Wear eye protection when working with pressurized fuel lines or epoxy sealant to avoid possible eye injury.
	INJURY Careless or improper handling of materials can result in bodily injury.		**GLOVES** Wear gloves to protect hands from irritation or injury.

⚠ WARNING

This product is to be installed and operated in the highly combustible environment of a gasoline station where flammable liquids and explosive vapors may be present.

ATTEMPTING TO SERVICE TANK MONITORS AND EQUIPMENT WITHOUT PROPER TRAINING CAN CAUSE DAMAGE TO PROPERTY, ENVIRONMENT, RESULTING IN PERSONAL INJURY OR DEATH.

The following hazards exist:

1. **Electrical shock resulting in serious injury or death may result if power is on during installation and the device is improperly installed.**
2. **Product leakage could cause severe environmental damage or explosion resulting in death, serious personal injury, property loss and equipment damage.**

Observe the following precautions:

1. **Read and follow all instructions in this manual, including all safety warnings.**
2. **Comply with all applicable codes including: the National Electrical Code; federal, state, and local codes; and other applicable safety codes.**
3. **Before installing this device, turn Off, tag/lock out power to the system, including console and submersible pumps.**
4. **To protect yourself and others from being struck by vehicles, block off your work area during installation or service.**
5. **Substitution of components may impair intrinsic safety.**

Before You Begin

- Comply with all recommended safety practices identified by OSHA (Occupational Safety and Health Administration) and your employer.
- Follow all installation requirements as per NFPA (National Fire Protection Association) 30, 30A, and 70.

- Where separate instrinsically safe circuits are installed in the same raceway they must be segregated in accordance with Article 504 of the NEC.
- Review and comply with all the safety warnings in the installation manuals and any other national, State or Local requirements.
- If the Carbon Canister is being wired directly to a TLS console, a 2-conductor, 18 AWG shielded cable must be installed in intrinsically safe conduit from the intrinsically safe wiring compartment of the TLS console to the carbon canister. If direct burial cable is used, it must comply with all requirements of the local authority having jurisdiction. Reference manual 576013-879 which describes special requirements regarding direct burial installations. Also, see manual 576013-858 for a complete listing of required materials and an overview of direct burial installations.
- Use only UL certified Gas/TFE yellow teflon tape on all fittings. Do not use pipe dope to seal pipe threads or fittings in and out of the CCVP.

Veeder-Root Parts

- Veeder-Root Carbon Canister Vapor Polisher, Form No. 861290-002.

Table 1. CCVP 2” Installation Kit

Item	Qty.	Description	P/N
1	1	Carbon Canister	332761-002
2	1	Inlet Piping Kit	330020-638
3	1	Mounting Bracket Group	332861-002
4	1	CCVP Installation Instructions	577013-920

- Veeder-Root Carbon Canister Vapor Polisher, Form No. 861290-003.

Table 2. CCVP 3” Installation Kit

Item	Qty.	Description	P/N
1	1	Carbon Canister	332761-002
2	1	Inlet Piping Kit	330020-638
3	1	Mounting Bracket Group	332861-003
4	1	CCVP Installation Instructions	577013-920

- Veeder-Root CCVP piping group kits.

Table 3. CCVP Piping Group Kits

Item	Qty.	Description	P/N
1	1	2” Piping Group Kit	332954-002
2	1	3” Piping Group Kit	332954-003

Installation Procedure

1. Figure 4 of the TLS-3XX Site Prep Manual, P/N 576013-879, must be consulted for proper installation of the Carbon Canister into hazardous locations with direct wiring.
2. During the installation, all required National, State and local safety codes must be followed.
3. The CCVP contains an integral vapor valve that operates in parallel with the site pressure/vacuum (P/V) vent. Location of the vapor valve outlet must conform to Article 514 of the National Electrical Code (NEC) and NFPA 30/30A.
4. Do not install the CCVP on unsupported vent pipes. If the vents are not attached to a support structure or a wall, a support structure must be installed prior to mounting the CCVP.
5. A straight coupling or union is required at the base of the vent pipe installation. For new or rebuilt sites, it is recommended that the installation design specify a threaded fitting for joining the vent pipes to the underground piping system.
6. **IMPORTANT! To assure that the canister outlet is 12 feet (minimum above grade, the CCVP mounting bracket must be located as shown in Figure 1 and the U-bolts tightly clamped to the vent pipe before mounting the canister.**
7. Following all required national, state, local and site safety precautions, carefully hang the CCVP's notched support tabs onto the top two side studs of its mounting bracket (Step 1 in Figure 2), swing the canister down until all of the slots in the canister's side mounting tabs seat against the studs in the bracket (Step 2 in Figure 2), then tighten the six side nuts to secure the canister onto its bracket (Step 3 in Figure 2).
8. Figure 3 shows important reference dimensions and required clearances of the installed canister.
9. Install weather tight junction boxes (2 required) and conduit per all NEC, State and local codes (see example installation in Figure 1).
10. Connect the two-pin connector of the 6-foot cable provided in the installation kit to the CCVP vapor valve, observing plug polarities (see Figure 4). The other end of this cable is passed through a kit supplied cord grip in the upper junction box.
11. Connect the white wire of the two conductor cable from the vapor valve to the positive sensor wire from the TLS Console Smart Sensor Interface module (see Figure 5). Connect the black wire on the two conductor cable to the negative sensor wire from the TLS Console Smart Sensor Interface module.
12. Following the instructions in Figure 6, seal the wire nuts of each of the two cable connections in the epoxy pack provided.
13. Attach CCVP vapor valve field wiring to the Smart Sensor Interface Module in the TLS console as shown in Figure 7.
14. Connect all lower fittings, valve and tubing between the vent pipe and the lower manifold on the CCVP.
15. Confirm ball valve is in the open, canister to vent stack position (per Figure 3), then insert the clevis pin and secure with the hitch pin.
16. A passing pressure decay test, in accordance with CARB TP-201.3, must be completed after the CCVP is installed (see Exhibit 4 of VR 203 / VR 204).
17. A passing operability test must be completed in accordance with the procedures defined in VR 203 / VR 204 Exhibit 11 & 12.

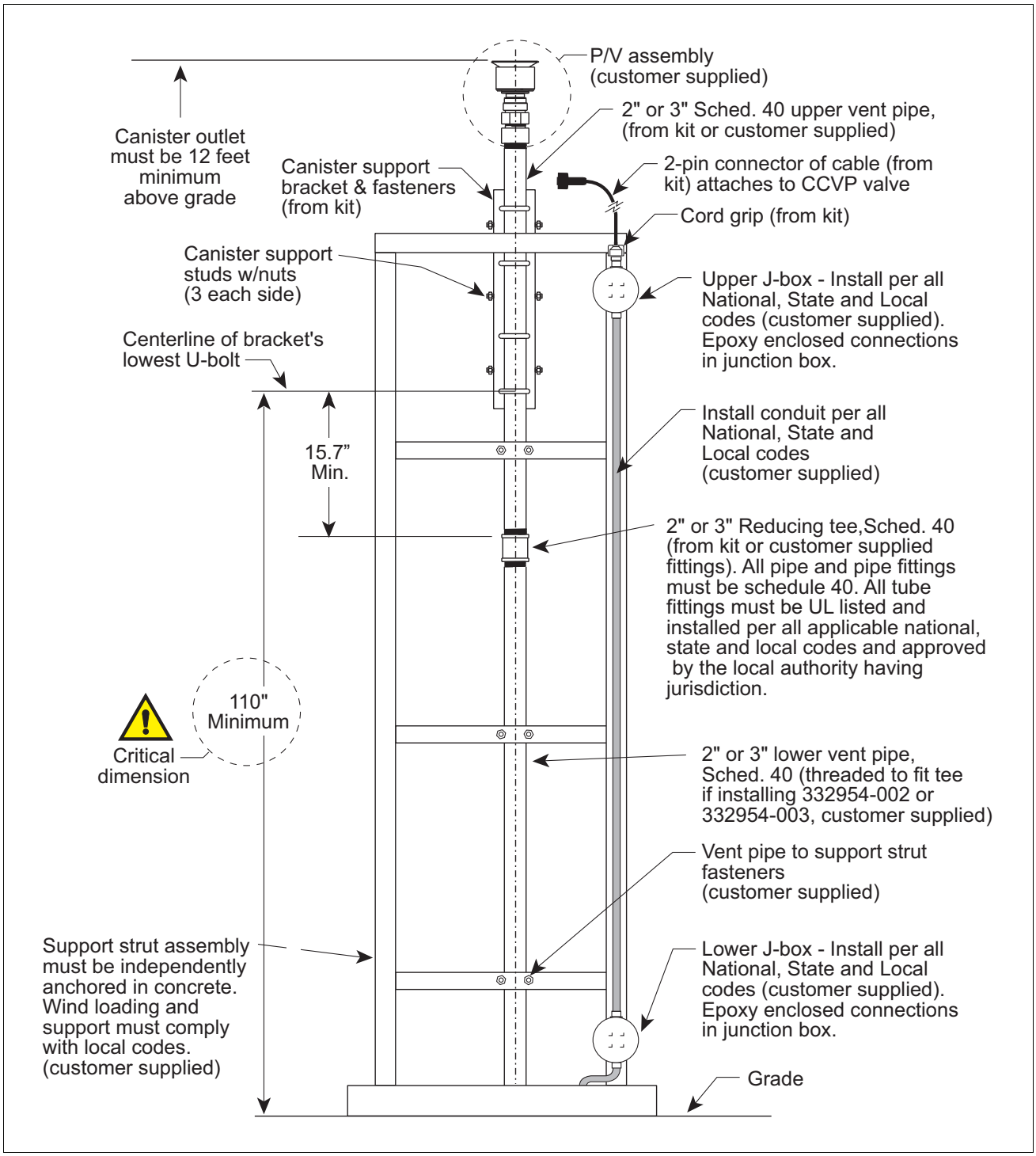

Figure 1. Typical direct wired installation example

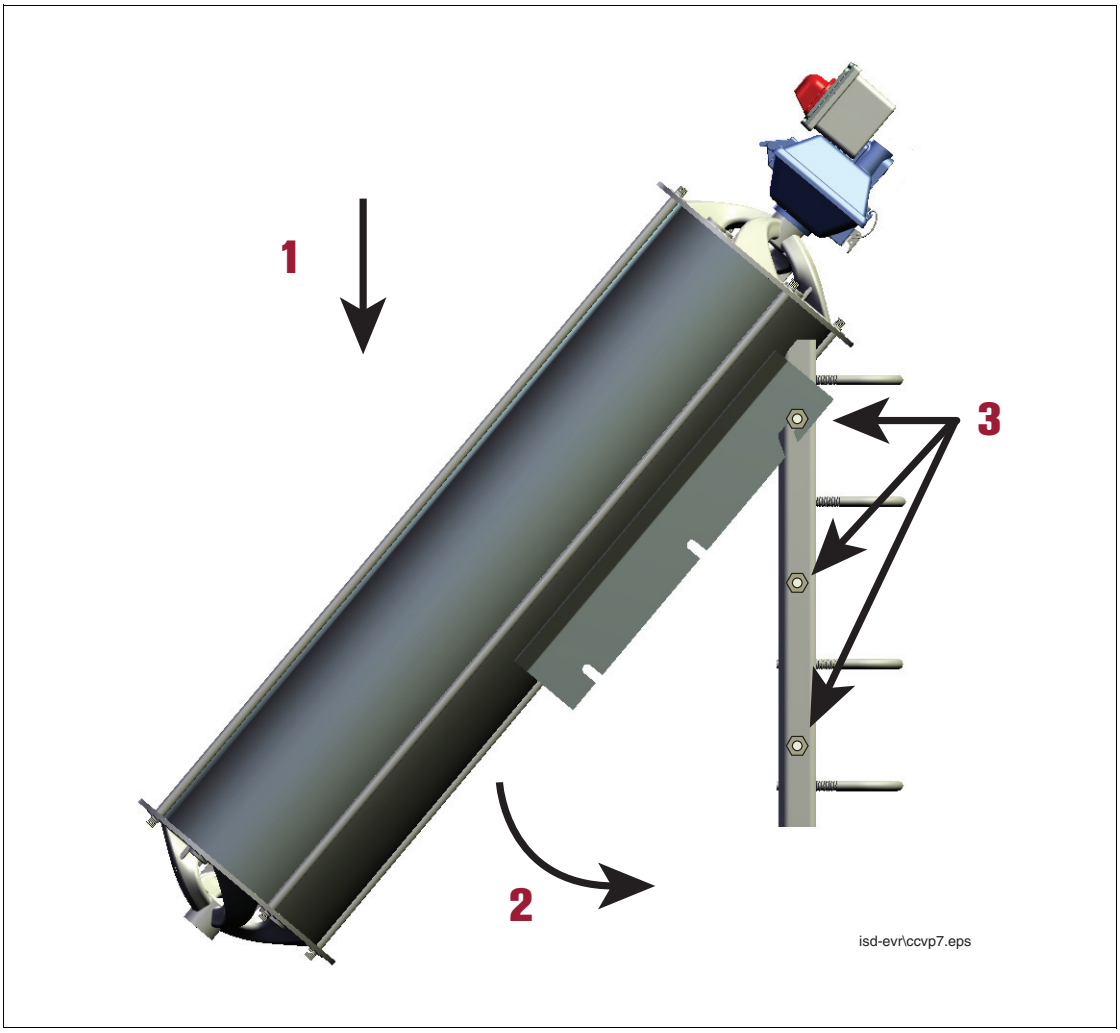

Figure 2. Installing CCVP onto bracket

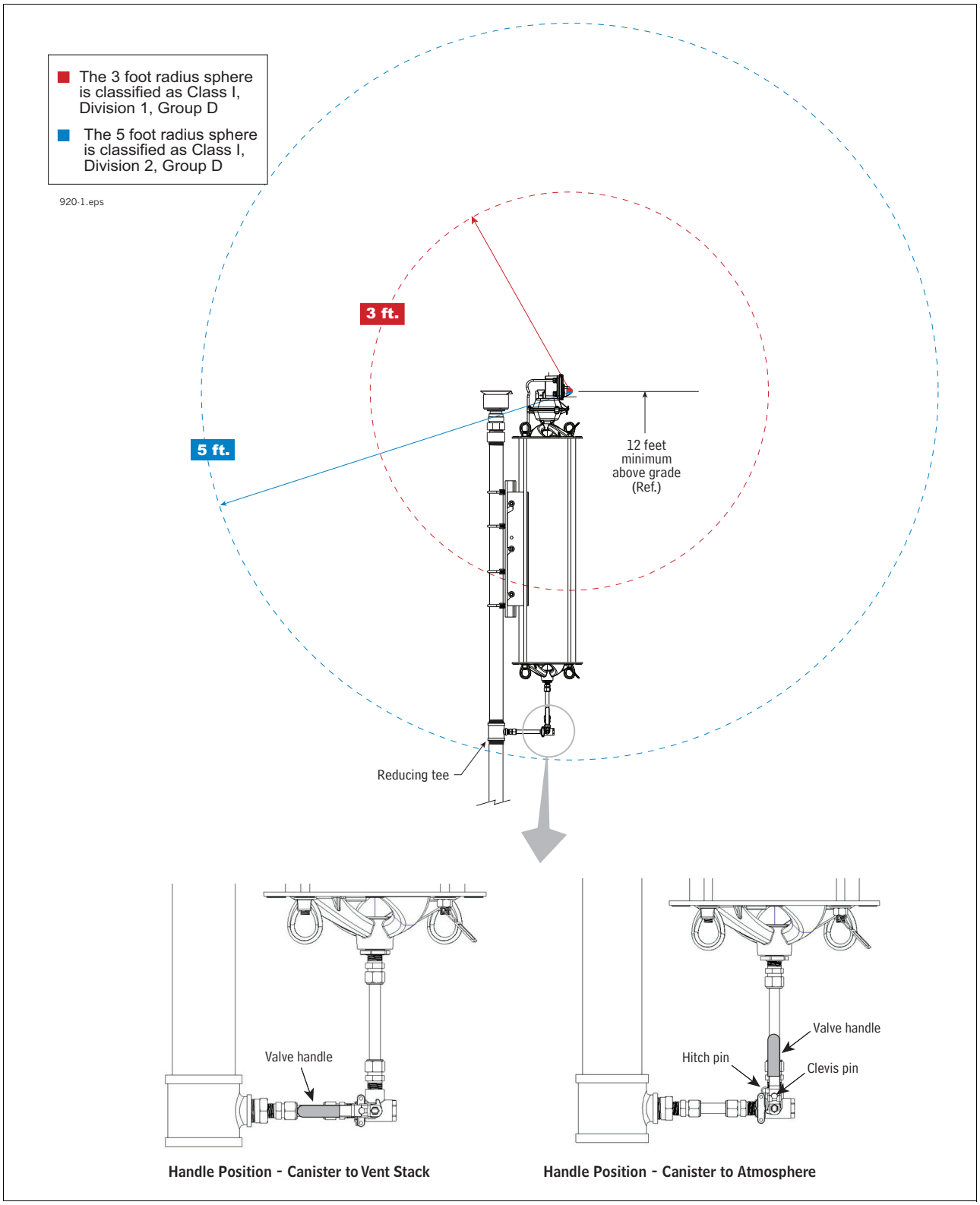

Figure 3. Canister reference dimensions and clearances

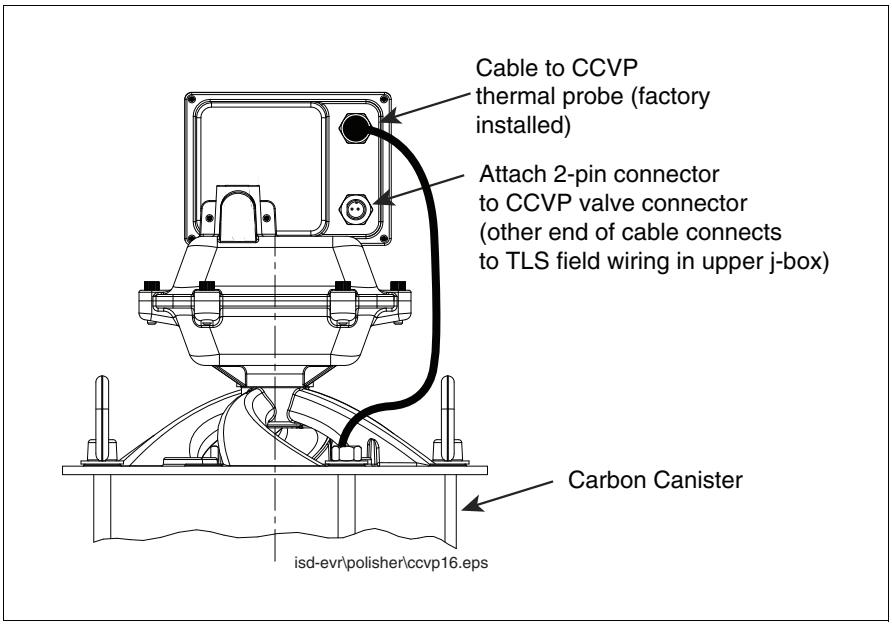

Figure 4. Locating the CCVP vapor valve connector

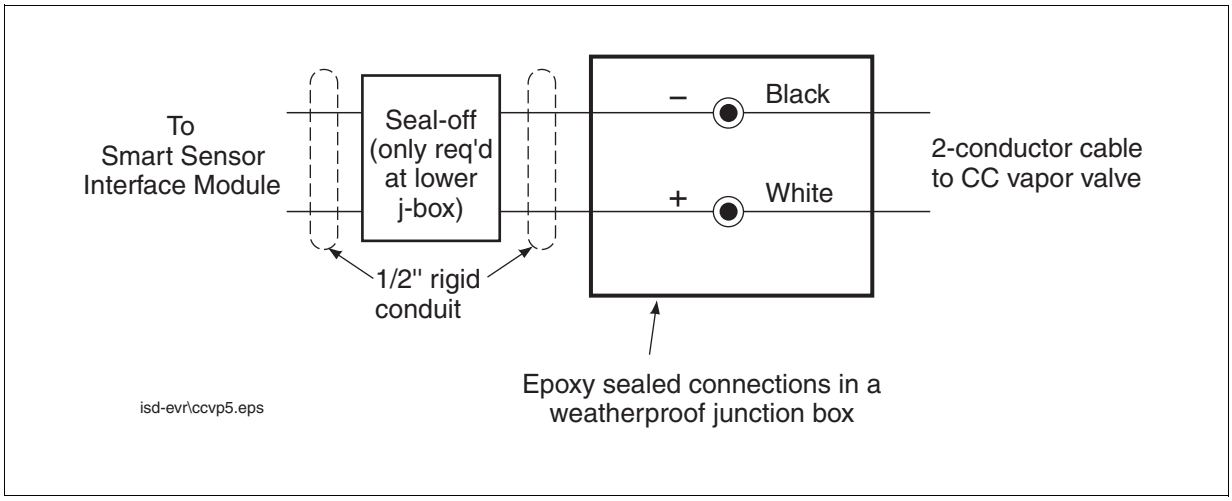

Figure 5. Field wiring CCVP vapor valve

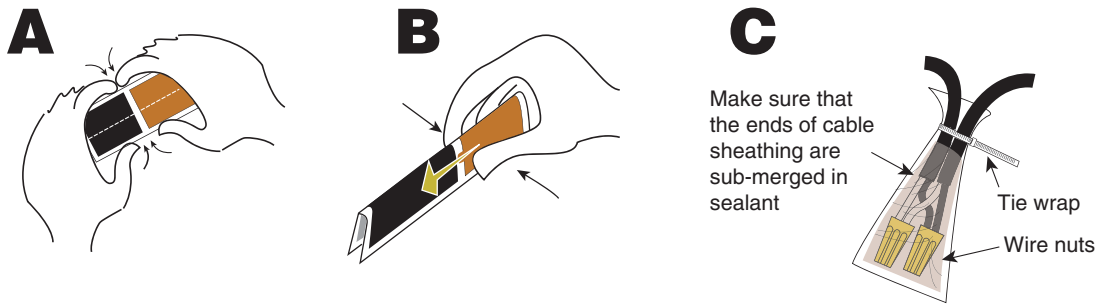

Instructions:

NOTE: When temperature is below 50°F (10°C), keep resin in a warm place prior to mixing (e.g., in an inside pocket next to body).

1. Open epoxy sealant package, and remove resin pak.
2. Holding resin pak as shown in A, bend pak along long length.
3. As shown in B, firmly squeeze the RED SIDE of the resin, forcing it through the center seal and into BLACK SIDE.
4. Mix thoroughly to a uniform color by squeezing contents back and forth 25-30 times.
5. Squeeze mixed, warm resin into one end of bag and cutoff other end.
6. Slowly insert wiring connections into sealing pack until they fit snugly against the opposite end as shown in C.
7. Twist open end of bag and use tie wrap to close it off and position the tie wrapped end up until the resin jells.

CAUTION: Epoxy sealant is irritating to eyes, respiratory system, and skin. Can cause allergic skin reaction. Contains: epoxy resin and Cycloaliphatic epoxycarboxylate.

Precautions: Wear suitable protective clothing, gloves, eye, and face protection. Use only in well ventilated areas. Wash thoroughly before eating, drinking, or smoking.

isd-evr\ccvp8.eps

Figure 6. Epoxy sealing CCVP vapor valve field wiring connections

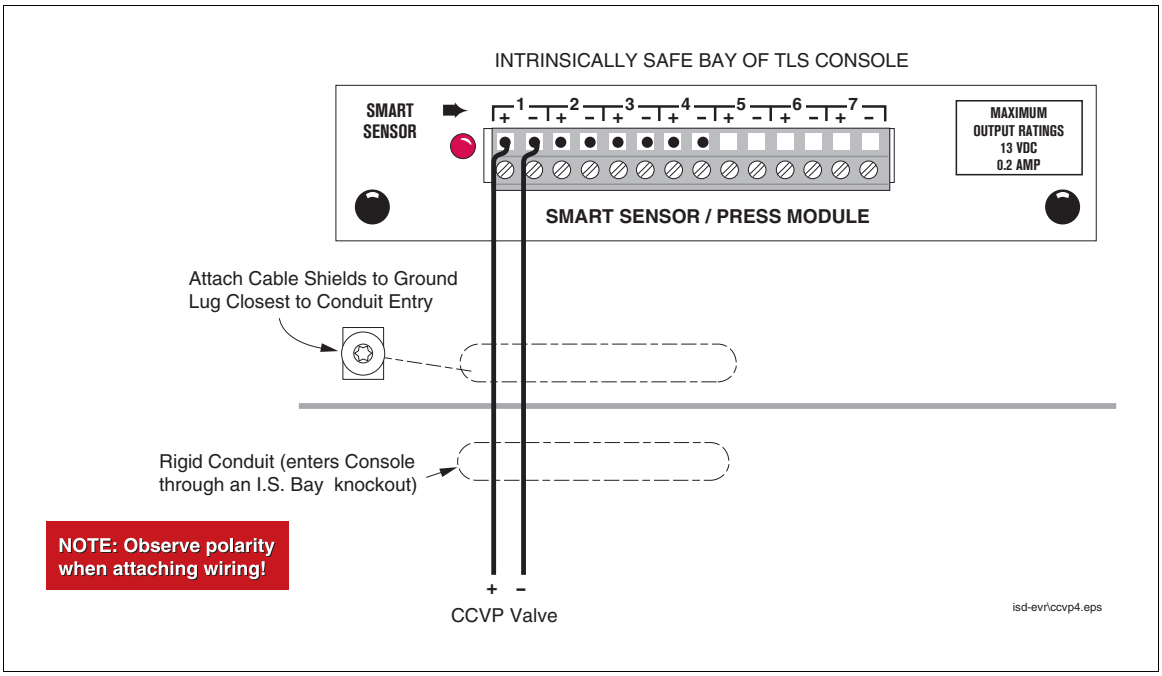

Figure 7. Attaching CCVP vapor valve wiring to TLS-350 Console

Ambient Temperature Sensor Assembly Replacement (P/N 332796-001)

1. Remove the three #25 Torx screws holding the Ambient Temperature Sensor assembly to the Vapor Valve assembly (see Figure 8).
2. Pull the sensor assembly straight out (unplugging it).
3. Align the replacement Ambient Temperature Sensor assembly's connector with the connector in the Vapor Valve assembly and push in the assembly until it seats against the Vapor Valve assembly (see Figure 9).
4. Replace the three #25 Torx screws in the Ambient Temperature Sensor assembly cover until tight.

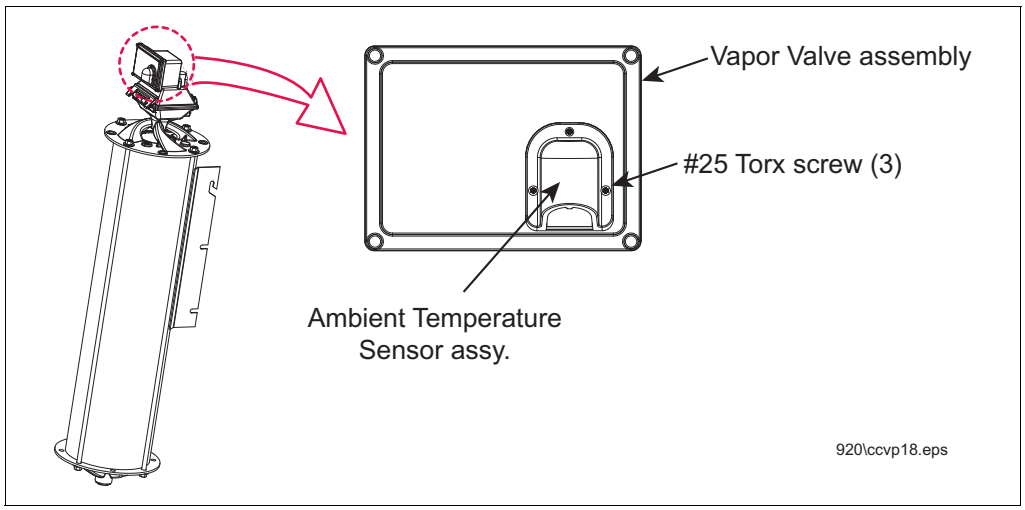

Figure 8. Remove Ambient Temperature Sensor assembly

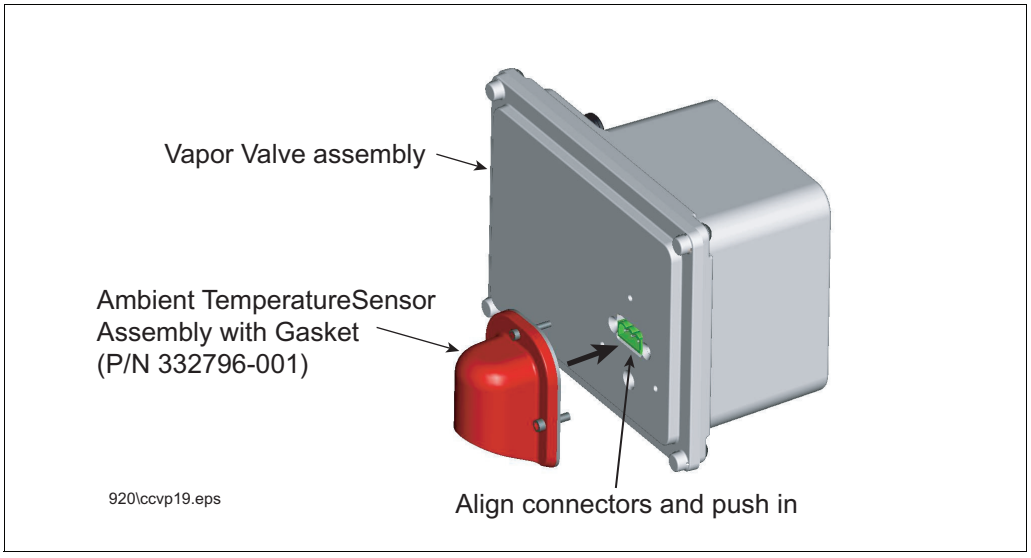

Figure 9. Replacing Ambient Temperature Sensor Assembly

Vapor Valve Filter Replacement (P/N 332901-001)

1. Remove the four 1/4 -20 x 1” hex key bolts from the top of the Vapor Valve Filter housing (see Figure 10).
2. Swing the housing top back and remove the filter plate from its seat and the o-ring from its groove in the Vapor Valve Filter housing’s lower half (see Figure 11).
3. Install a new o-ring (P/N 512700-275) in the groove and insert a new filter plate (P/N 332901-001) into its seat in the lower half of the housing, close the cover and screw in the four 1/4-20 hex key bolts until tight.
4. Run the CCVP Leakage and Flow test.

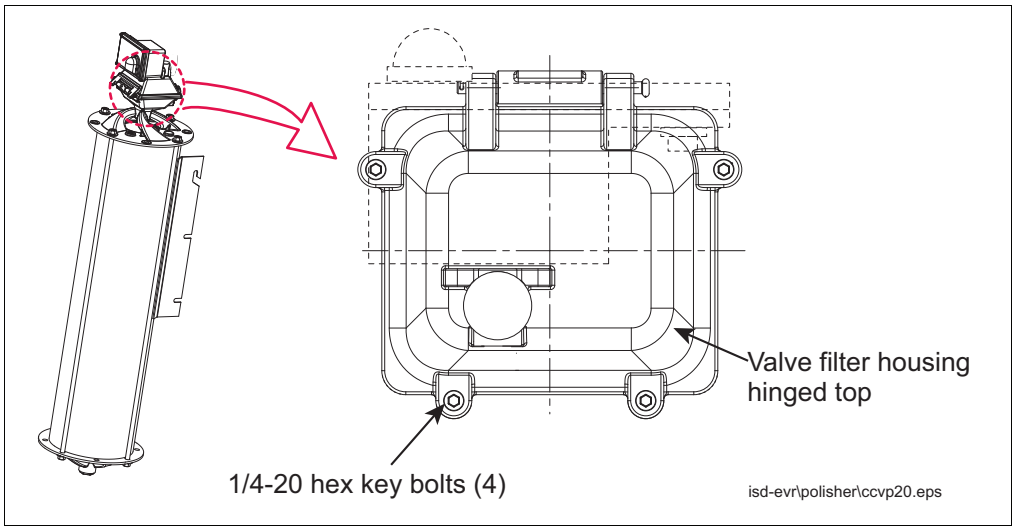

Figure 10. Accessing the valve filter and o-ring

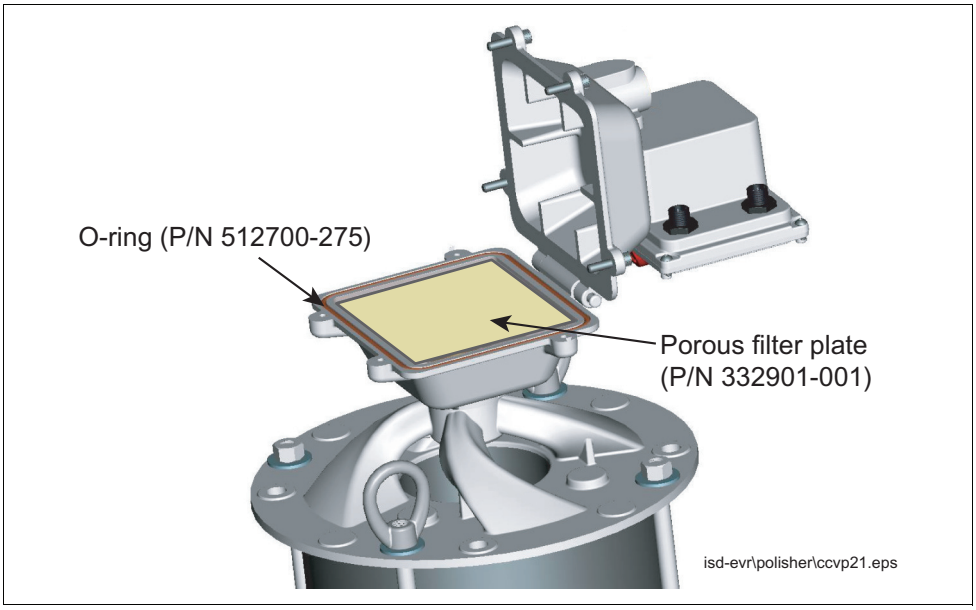

Figure 11. Replacing the valve filter and o-ring

Vapor Valve Assembly Replacement ((P/N 332672-002)

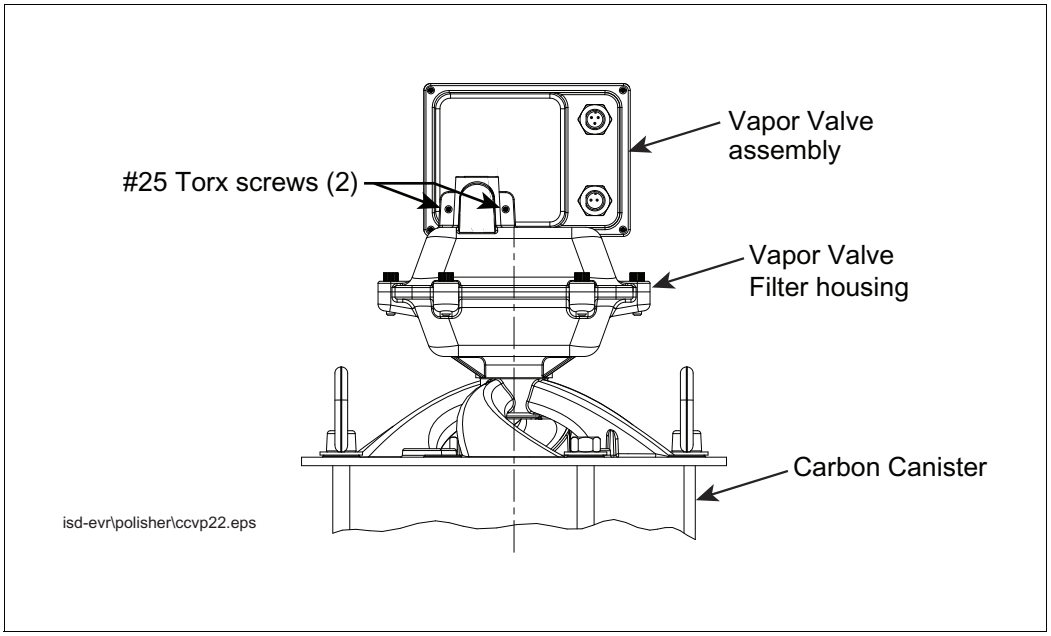

Figure 12. Removing Vapor Valve assembly

1. Remove the cables from the two connectors on the Vapor Valve assembly.
2. Remove the two #25 Torx head screws that secures the Vapor Valve assembly to the Vapor Valve Filter housing (see Figure 12).
3. Remove the Vapor Valve assembly (and remove the Shuttle Connector if necessary, see Figure 13).
4. Push the replacement Shuttle connector into the port on the back of the replacement Vapor Valve assembly. Remove and retain the two #25 Torx Taptite screws on each side of the Shuttle connector port on the back of the back Vapor Valve assembly.
5. Line up the Vapor Valve assembly shuttle connector with the port in the Vapor Valve Filter housing and push the Vapor Valve assembly in until it seats against the Vapor Valve Filter housing.
6. Insert the two #25 Torx head taptite screws through the holes in each side of the Vapor Valve Filter housing and screw them into the Vapor Valve assembly until tight (see Figure 13).
7. Reconnect the two cables to the two connectors on the Vapor Valve assembly.
8. Run CCVP Leakage and Flow test.

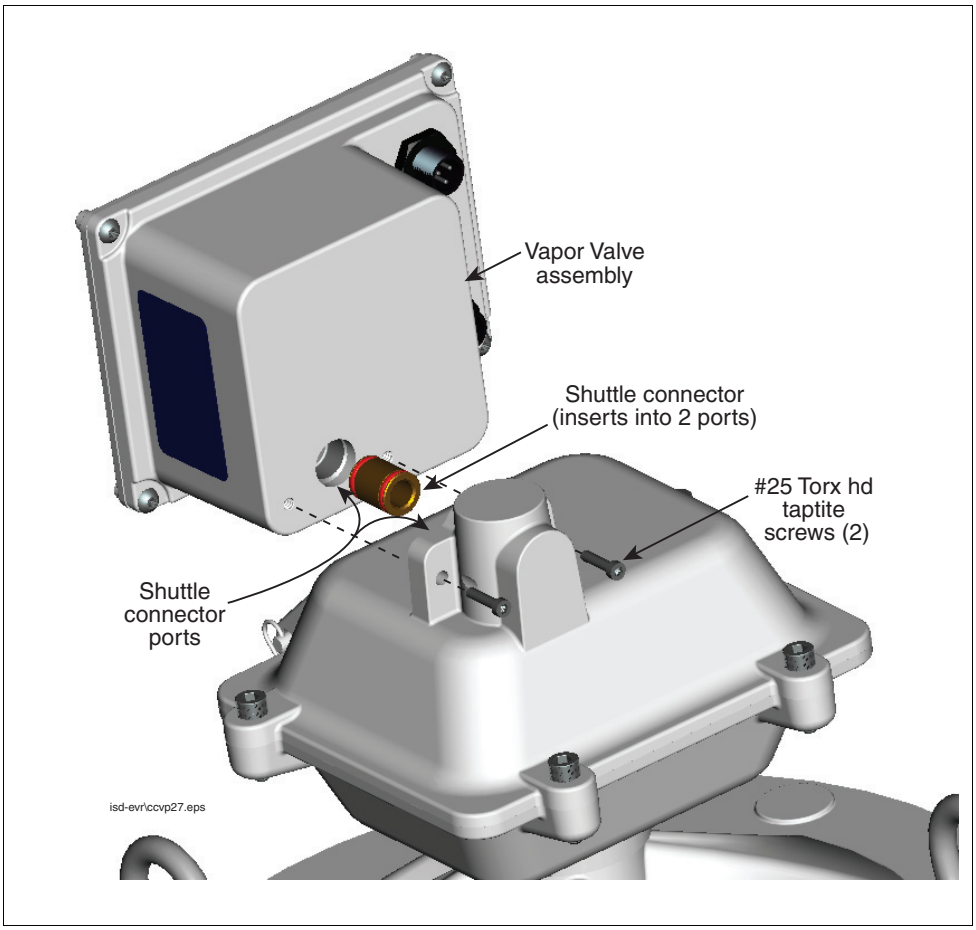

Figure 13. Replacing Vapor Valve assembly and Shuttle Connector

Canister Thermal Probe Replacement (P/N 332923-018)

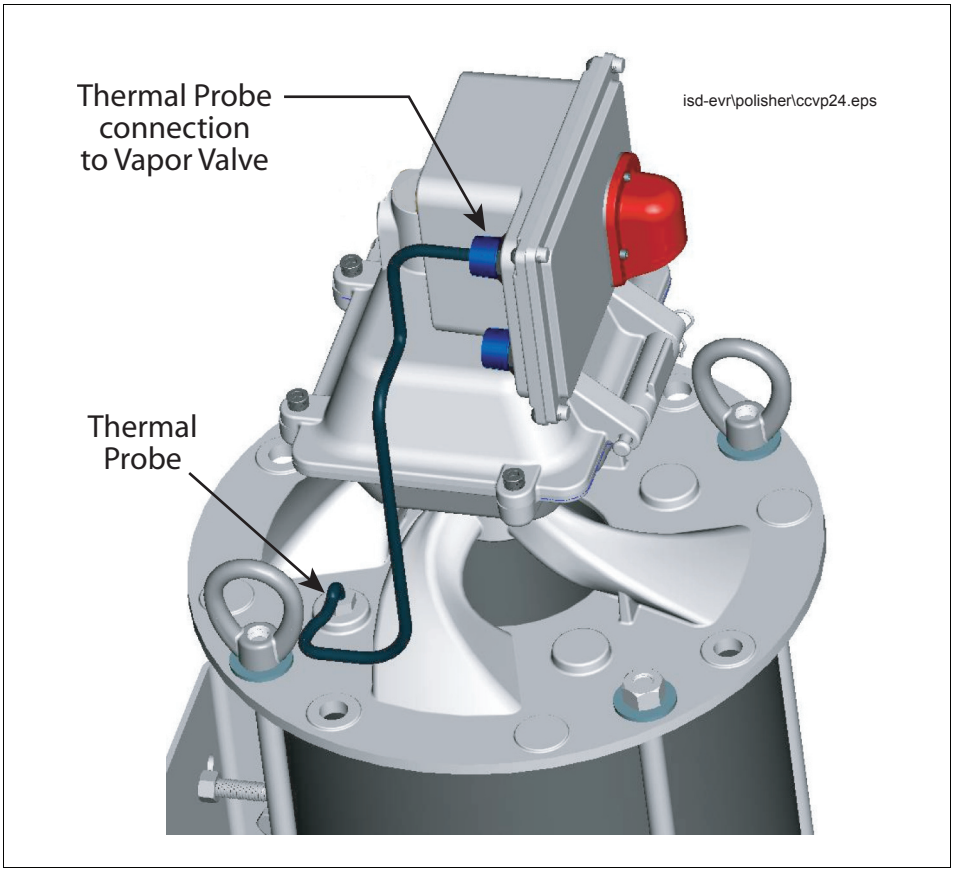

Figure 14. CCVP Thermal Probe

1. Remove the thermal probe cable connector from the back of the Vapor Valve assembly (see Figure 14).
2. Using a 9/16”open-end wrench, remove the thermal probe from the top of the CCVP.
3. Install and tighten the replacement Thermal Probe into its port in the CCVP and reconnect the cable to the Vapor Valve connector.
4. Run CCVP Leakage and Flow test.

VEEDER-ROOT

For technical support, sales or other assistance, please visit: www.veeder.com

ISD Balance Vapor Flow Meter

Installation Guide

VEEDER-ROOT

Notice

Veeder-Root makes no warranty of any kind with regard to this publication, including, but not limited to, the implied warranties of merchantability and fitness for a particular purpose.

Veeder-Root shall not be liable for errors contained herein or for incidental or consequential damages in connection with the furnishing, performance, or use of this publication.

Veeder-Root reserves the right to change system options or features, or the information contained in this publication.

This publication contains proprietary information which is protected by copyright. All rights reserved. No part of this publication may be modified or translated to another language without the prior written consent of Veeder-Root.

Contact TLS Systems Technical Support for additional troubleshooting information at 800-323-1799.

DAMAGE CLAIMS / LOST EQUIPMENT

Thoroughly examine all components and units as soon as they are received. If any cartons are damaged or missing, write a complete and detailed description of the damage or shortage on the face of the freight bill. The carrier's agent must verify the inspection and sign the description. Refuse only the damaged product, not the entire shipment.

Veeder-Root must be notified of any damages and/or shortages within 30 days of receipt of the shipment, as stated in our Terms and Conditions.

VEEDER-ROOT'S PREFERRED CARRIER

1. Contact Veeder-Root Customer Service at 800-873-3313 with the specific part numbers and quantities that were missing or received damaged.
2. Fax signed Bill of Lading (BOL) to Veeder-Root Customer Service at 800-234-5350.
3. Veeder-Root will file the claim with the carrier and replace the damaged/missing product at no charge to the customer. Customer Service will work with production facility to have the replacement product shipped as soon as possible.

CUSTOMER'S PREFERRED CARRIER

1. It is the customer's responsibility to file a claim with their carrier.
2. Customer may submit a replacement purchase order. Customer is responsible for all charges and freight associated with replacement order. Customer Service will work with production facility to have the replacement product shipped as soon as possible.
3. If "lost" equipment is delivered at a later date and is not needed, Veeder-Root will allow a Return to Stock without a restocking fee.
4. Veeder-Root will NOT be responsible for any compensation when a customer chooses their own carrier.

RETURN SHIPPING

For the parts return procedure, please follow the appropriate instructions in the "General Returned Goods Policy" pages in the "Policies and Literature" section of the Veeder-Root **North American Environmental Products** price list. Veeder-Root will not accept any return product without a Return Goods Authorization (RGA) number clearly printed on the outside of the package.

INSTALLATION IN THE STATE OF CALIFORNIA

Please refer to the California Air Resources Board Vapor Recover Certification Phase II EVR Executive Order web site (*www.arb.ca.gov/vapor/eo-evrphaseII.htm*) for the latest manual revisions.

©Veeder-Root 2008. All rights reserved.

ISD Vapor Flow Meter Installation

Contractor Certification Requirements 1
Related Manuals 1
Safety Precautions 2
Before You Begin 3
Veeder-Root Parts 3
Tools Required 3
Installation Steps - Balance Systems Above Shear Valve 4
Installation Steps - Balance Systems Below Shear Valve 6
Seal and Connect Field Wiring 9

Figures

Figure 1. Example Vapor Flow Meter Installation Above Shear Valve 5
Figure 2. Field wiring Vapor Flow Meter - Observe Polarity 6
Figure 3. Example flow meter installations with approximate clearances 7
Figure 4. Example Vapor Flow Meter Installation Below Shear Valve 8
Figure 5. Epoxy sealing field wiring 9
Figure 6. Connecting Vapor Flow Meter to Smart Sensor Interface Module 10

Tables

Table 1. Vapor Flow Meter Installation Kit (P/N 330020-585) 3

ISD Vapor Flow Meter Installation

This manual contains instructions to install a Veeder-Root ISD (In-Station Diagnostic) Vapor Flow Meter in a dispenser's vapor return line in balance systems.

This manual assumes all preliminary site preparation is completed, and that wiring from the console to the Vapor Flow Meter junction box is in place and meets the requirements set out in the TLS-3XX Series Site Prep manual.

Contractor Certification Requirements

Veeder-Root requires the following minimum training certifications for contractors who will install and setup the equipment discussed in this manual:

Level 1 Contractors holding valid Level 1 Certification are approved to perform wiring and conduit routing, equipment mounting, probe and sensor installation, tank and line preparation, and line leak detector installation.

Level 2/3 or 4 Contractors holding valid Level 2, 3, or 4 Certifications are approved to perform installation checkout, startup, programming and operations training, troubleshooting and servicing for all Veeder-Root Tank Monitoring Systems, including Line Leak Detection and associated accessories.

Warranty Registrations may only be submitted by selected Distributors.

Related Manuals

576013-879 TLS-3XX Series Consoles Site Prep Manual

577013-937 In-Station Diagnostics Install, Setup & Operation Manual

Safety Precautions

The following safety symbols may be used throughout this manual to alert you to important safety hazards and precautions.

EXPLOSIVE Fuels and their vapors are extremely explosive if ignited.	**FLAMMABLE** Fuels and their vapors are extremely flammable.
ELECTRICITY High voltage exists in, and is supplied to, the device. A potential shock hazard exists.	**TURN POWER OFF** Live power to a device creates a potential shock hazard. Turn Off power to the device and associated accessories when servicing the unit.
READ ALL RELATED MANUALS Knowledge of all related procedures before you begin work is important. Read and understand all manuals thoroughly. If you do not understand a procedure, ask someone who does.	**USE SAFETY BARRICADES** Unauthorized people or vehicles in the work area are dangerous. Always use safety cones or barricades, safety tape, and your vehicle to block the work area.
WARNING Heed the adjacent instructions to avoid damage to equipment, property, environment or personal injury.	**WEAR EYE PROTECTION** Wear eye protection when working with pressurized fuel lines or epoxy sealant to avoid possible eye injury.
INJURY Careless or improper handling of materials can result in bodily injury.	**GLOVES** Wear gloves to protect hands from irritation or injury.

⚠ WARNING

This product is to be installed and operated in the highly combustible environment of a gasoline dispenser where flammable liquids and explosive vapors may be present.

Improper installation could cause damage to property, environment, resulting in serious injury or death.

The following hazards exist:

1. **Electrical shock resulting in serious injury or death may result if power is on during installation and the device is improperly installed.**
2. **Product leakage could cause severe environmental damage or explosion resulting in death, serious personal injury, property loss and equipment damage.**

Observe the following precautions:

1. **Read and follow all instructions in this manual, including all safety warnings.**
2. **Comply with all applicable codes including: the National Electrical Code; federal, state, and local codes; and other applicable safety codes.**
3. **Before installing this device, turn Off, tag/lock out power to the system, including console and submersible pumps.**
4. **To protect yourself and others from being struck by vehicles, block off your work area during installation or service.**
5. **Substitution of components may impair intrinsic safety.**

Before You Begin

- A level 1 or higher certified Veeder-Root Technician must be available (on site) to assist in this type of installation.
- Comply with all recommended safety practices identified by OSHA (Occupational Safety and Health Administration) and your employer.
- Follow all installation requirements as per NFPA (National Fire Protection Association) 30, 30A, and 70.
- Review and comply with all the safety warnings in the installation manuals and any other national, State or Local requirements.
- A 2-conductor, 18 AWG shielded cable must be installed in intrinsically safe conduit from each dispenser to the intrinsically safe wiring compartment of the TLS console.
- Debris from plumbing modifications should be flushed through the piping system prior to installing the ISD Vapor Flow Meter.
- Use only UL recognized Gas/TFE yellow teflon tape on all fittings. Do not use pipe dope to seal pipe threads or fittings in and out of the ISD Vapor Flow Meter.

Veeder-Root Parts

- Sensor Installation Kit, see Table 1.

Table 1. Vapor Flow Meter Installation Kit (P/N 330020-585)

Item	Qty.	Description	P/N
1	1	ISD Vapor Flow Meter	332374-002
2	2	Flange with 1” NPT threaded hole	332091-001
3	4	5/16-18 UNC-2B x 3/4” hex head bolt	514100-426
4	2	1-11.5 NPT x 2 “ male to male threaded steel nipple	576008-655
5	2	O-ring (Parker size # 2-218, Nitrile)	512700-258
6	1	Cord grip group	331028-001
7	1	Sealing pack	514100-304
8	2	Wire nut	576008-461
9	2	Tie wrap	510901-337
10	4	5/16” Lock washer	514100-436

Tools Required

- Pipe wrench suitable for tightening 1-inch NPT pipe.
- 1/2’’ socket wrench to install Vapor Flow Meter flange bolts.
- Necessary pipe fitter’s equipment and a non-hazardous work space suitable to modify dispenser vapor line for Vapor Flow Meter installation, when necessary.

Installation Steps - Balance Systems Above Shear Valve

1. Before installing this device, turn off, tag/lock out power to the system, including console and submersible pumps.
2. Remove the dispenser's lower sheet metal doors to access the vapor plumbing.
3. Loosen any factory installed mounts and/or brackets in order to provide room to disconnect any factory installed vapor return plumbing from the shear valve.
4. Disconnect the factory installed vapor return plumbing from the vapor shear valve (see Figure 1).
5. Remove any unneeded field installed plumbing above the vapor shear valve. The Vapor Flow Meter with flanges attached can be used for sizing the required head space of approximately 8 inches. Approximately 3 inches of clearance is required on both sides of the piping to accommodate the width of the meter body.
6. Thread one of the flanges (two provided in installation kit) onto the dispenser vapor return piping.

   Note: Prior to modifying any piping in the dispenser, consult the dispenser manufacturer to determine if ISD ready retrofit kits are available. Any factory installed plumbing that must be modified in order to install the vapor flow meter, must be removed to a non hazardous work area before any cutting or threading takes place. After modifications to any plumbing, it must be reinstalled in accordance with the dispenser manufacturers installation guidelines.

7. Install any necessary plumbing and the lower flange above the vapor shear valve.

   Note: The use of 90° elbows should be kept to a minimum to minimize pressure drop, maximize vapor collection efficiency and to prevent liquid traps. All horizontal plumbing must pitch to drain.

   IMPORTANT: Upper and lower flanges must align to within 1/16" center-to-center before installing flow meter. If piping is improperly aligned, torque could damage the flow meter and result in vapor leakage.

8. Clean all debris around the inlet and outlet plumbing prior to installing the Vapor Flow Meter. Do not blow compressed air through the Vapor Flow Meter to prevent damaging the internal screens.
9. Install the o-ring into the lower mounting flange.
10. Taking care that foreign material (chips, debris, sealant, etc.) does not enter the open piping or Vapor Flow Meter, carefully insert the o-ring and then connect the Vapor Flow Meter to the upper flange. Note that the flow arrow on the side of the meter body must point down.
11. Connect the lower flange to the Vapor Flow Meter.
12. Tighten any loose fittings and hardware
13. Route the wiring into the junction box via the supplied cord grip assembly.
14. Connect the wires from the Vapor Flow Meter to the field wiring from the console and cap with wire nuts (see Figure 2).
15. After all other ISD Vapor Flow Meters and the ISD Pressure Sensor are installed, pressurize the tank ullage space and vapor piping to at least 2 inches WC and test for leaks using leak detection solution.

IMPORTANT: Upper and lower flanges must align to within 1/16” center-to-center before installing flow meter. If piping is improperly aligned, torque could damage the flow meter and result in vapor leakage.

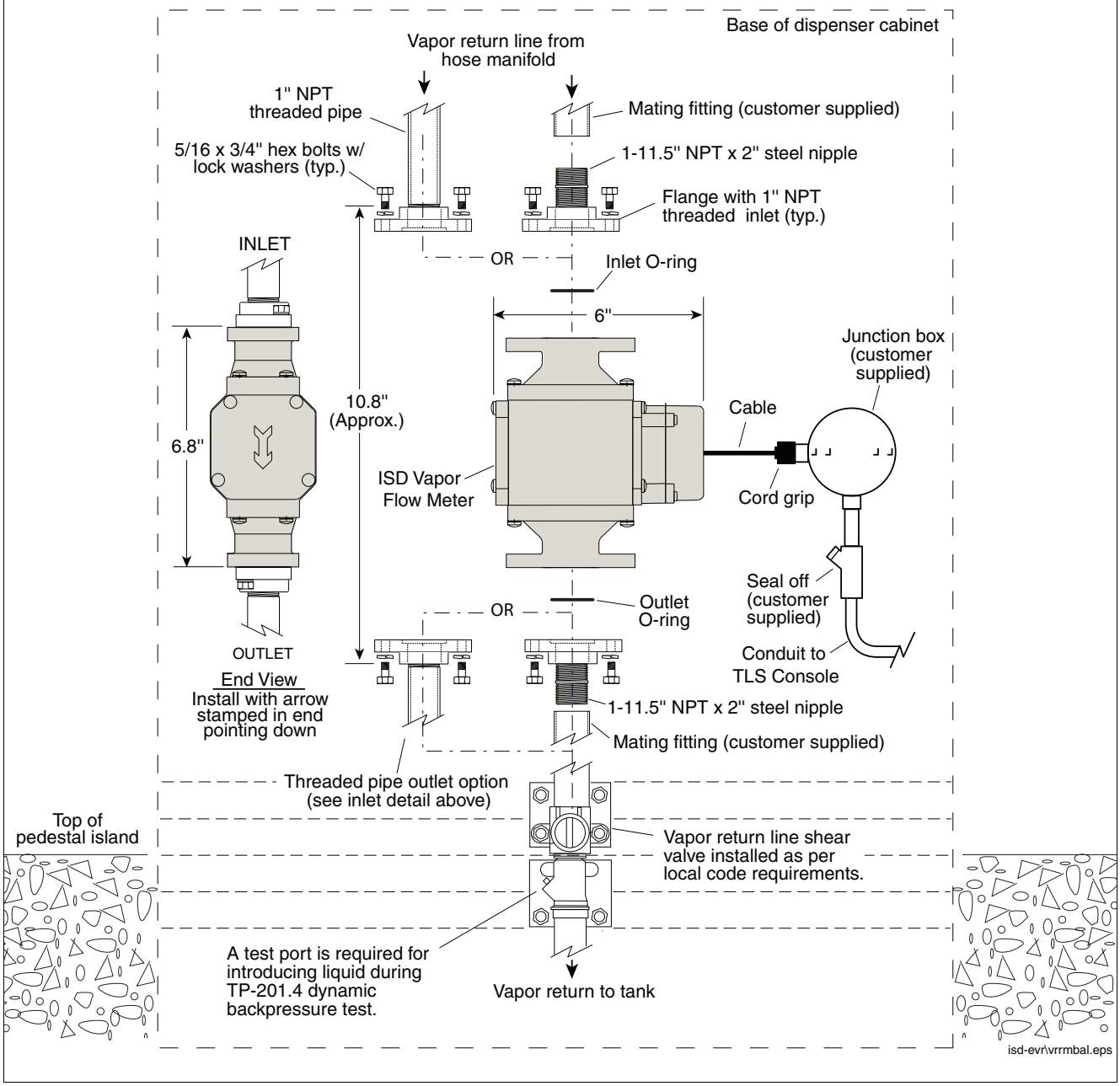

Figure 1. Example Vapor Flow Meter Installation Above Shear Valve

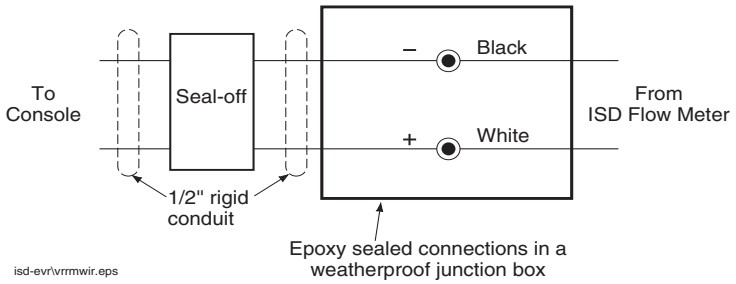

Figure 2. Field wiring Vapor Flow Meter - Observe Polarity

Installation Steps - Balance Systems Below Shear Valve

1. Before installing this device, turn Off, tag/lock out power to the system, including console and submersible pumps.
2. Remove the dispenser's lower sheet metal doors to access the vapor plumbing, if necessary.
3. Remove any unneeded field installed plumbing between the vapor shear valve and the vapor return line fitting. Figure 3 shows two example installations of the Vapor Flow Meter with the required lateral or wye fitting for running the TP-201.4 back-pressure test. Approximately 3 inches of clearance is required on both sides of the piping to accommodate the width of the meter body.

IMPORTANT: Upper and lower flanges must align to within 1/16" center-to-center before installing flow meter. If piping is improperly aligned, torque could damage the flow meter and result in vapor leakage.

4. Connect the lower flange to the pipe that is connected to the lateral or wye access fitting (see Figure 4).
5. Install the Vapor Flow Meter over the lower flange.
6. Connect the upper flange with o-ring above the Vapor Flow Meter.
7. Using a close nipple, thread the shear valve into the upper flange.
8. Using nipples, unions, and other plumbing as required, connect the plumbing outlet to the shear valve.
9. Route the wiring into the junction box via the supplied cord grip assembly. Connect the wires from the Vapor Flow Meter to the field wiring from the console and cap with wire nuts (see Figure 2).
10. After all other ISD Vapor Flow Meters and the ISD Pressure Sensor are installed, pressurize the tank ullage space and vapor piping to at least 2 inches WC and test for leaks using leak detection solution.

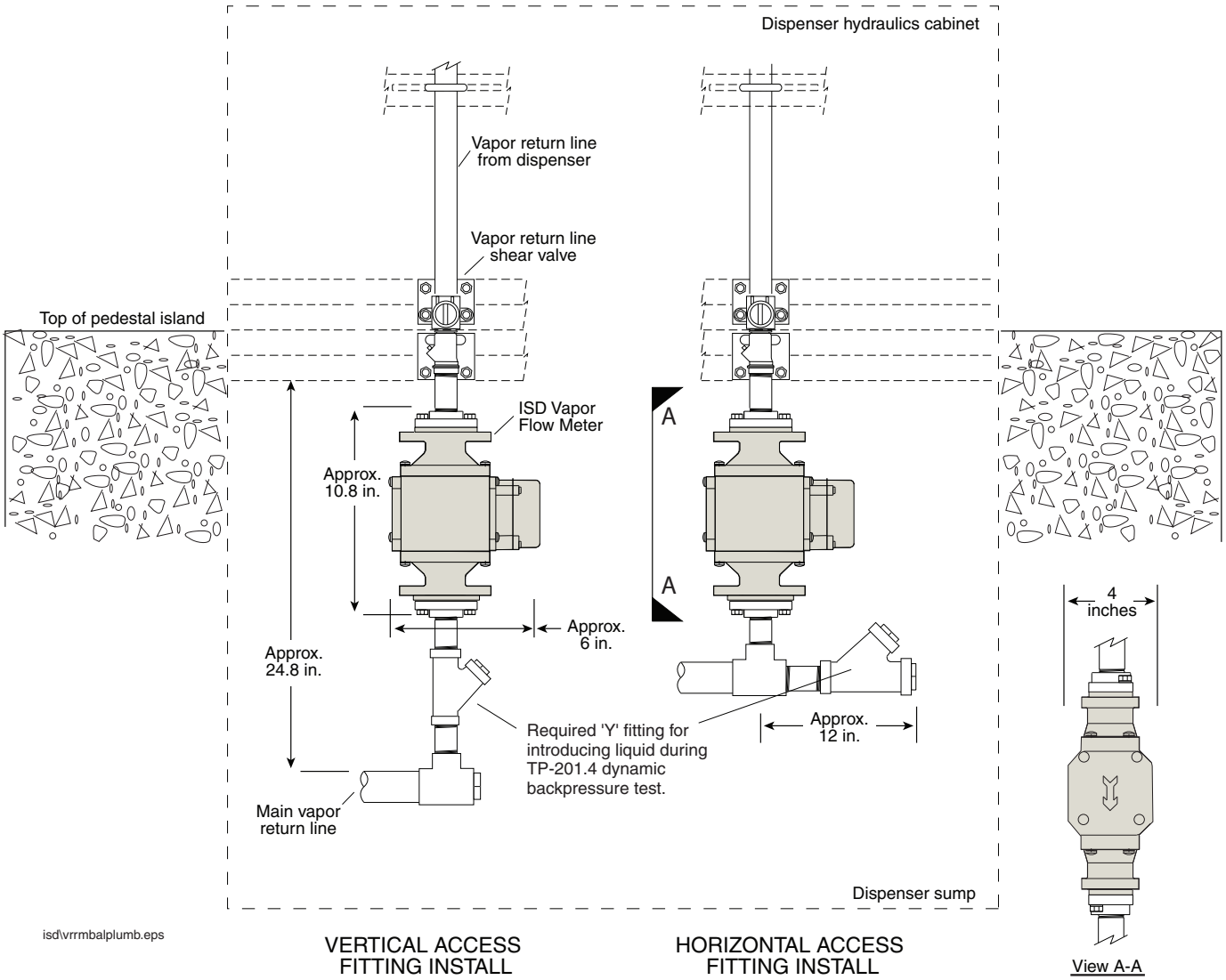

Figure 3. Example flow meter installations with approximate clearances

IMPORTANT: Upper and lower flanges must align to within 1/16” center-to-center before installing flow meter. If piping is improperly aligned, torque could damage the flow meter and result in vapor leakage.

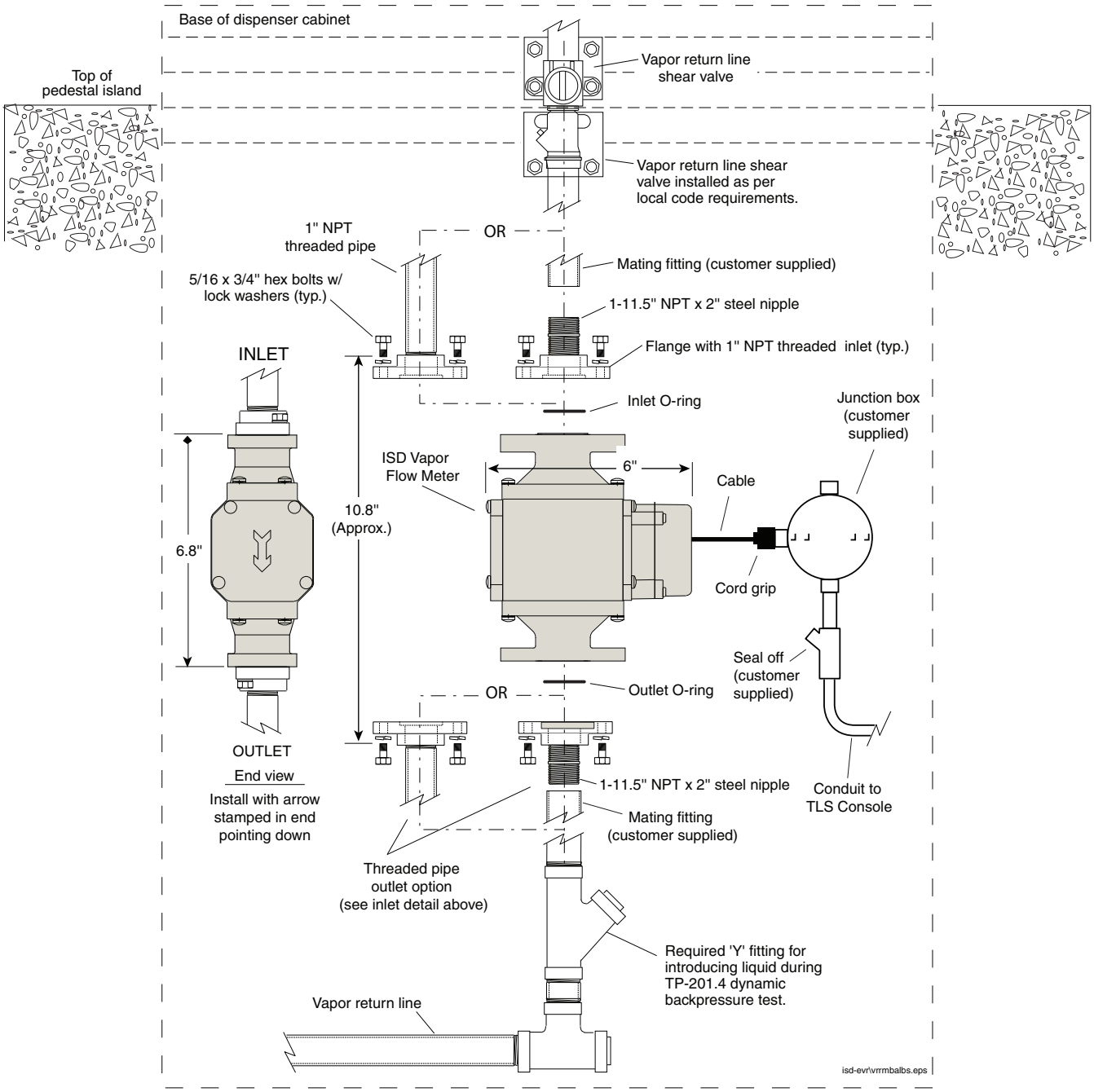

Figure 4. Example Vapor Flow Meter Installation Below Shear Valve

Seal and Connect Field Wiring

1. Seal wire nuts with epoxy sealant following the instructions in Figure 5.

CAUTION: Epoxy sealant is irritating to eyes, respiratory system, and skin. Can cause allergic skin reaction. Contains: epoxy resin and Cycloaliphatic epoxycarboxylate. Precautions: Wear suitable protective clothing, gloves, eye, and face protection. Use only in well ventilated areas. Wash thoroughly before eating, drinking, or smoking.

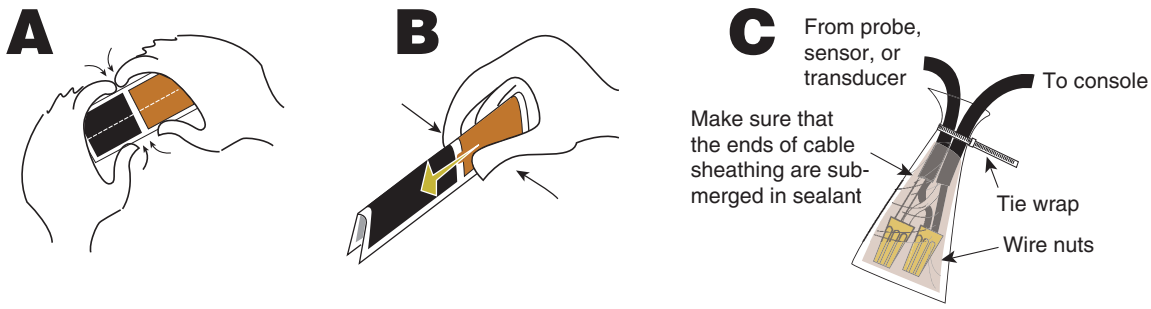

Instructions:

NOTE: When temperature is below 50˚F (10˚C), keep resin in a warm place prior to mixing (e.g., in an inside pocket next to body).

1. Open epoxy sealant package, and remove resin pak.
2. Holding resin pak as shown in A, bend pak along long length.
3. As shown in B, firmly squeeze the RED SIDE of the resin, forcing it through the center seal and into BLACK SIDE.
4. Mix thoroughly to a uniform color by squeezing contents back and forth 25-30 times.
5. Squeeze mixed, warm resin into one end of bag and cutoff other end.
6. Slowly insert wiring connections into sealing pack until they fit snugly against the opposite end as shown in C.
7. Twist open end of bag and use tie wrap to close it off and position the tie wrapped end up until the resin jells.

consoles\epxy2w.eps

Figure 5. Epoxy sealing field wiring

2. Push the epoxy sealed bag into the junction box. Replace and tighten the junction box cover.
3. Terminate field wiring into TLS Console and connect to Smart Sensor Module located in the intrinsically safe wiring compartment of the TLS as shown in Figure 6. Note: you must observe polarity! Also, the cable length between the console and sensor must not exceed the distance stated in the TLS-3XX Site Prep manual (P/N 576013-879).
4. Replace the lower sheet metal doors in the dispenser.

Note: Intrinsically safe devices must be installed in accordance with Article 504 of the National Electrical Code, ANSI/NFPA 70, for installation in the United States, or Section 18 of the Canadian Electrical Code for installations in Canada.

This intrinsically safe vapor flow meter P/N 332374-002, has only been evaluated for connection to a UL listed TLS-350 Series Liquid Level Gauge / Leak Detector.

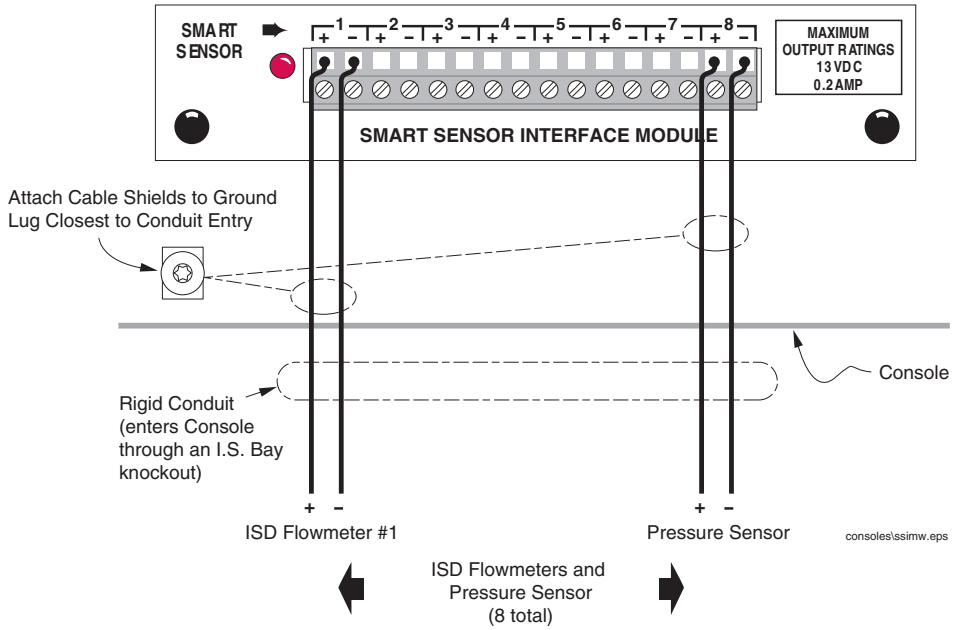

Figure 6. Connecting Vapor Flow Meter to Smart Sensor Interface Module

VEEDER-ROOT

For technical support, sales or other assistance, please visit:
www.veeder.com