Carbon Canister Vapor Polisher

Installation and Maintenance Guide

VEEDER-ROOT

Notice

Veeder-Root makes no warranty of any kind with regard to this publication, including, but not limited to, the implied warranties of merchantability and fitness for a particular purpose.

Veeder-Root shall not be liable for errors contained herein or for incidental or consequential damages in connection with the furnishing, performance, or use of this publication.

Veeder-Root reserves the right to change system options or features, or the information contained in this publication as approved by ARB.

This publication contains proprietary information which is protected by copyright. All rights reserved. No part of this publication may be modified or translated to another language without the prior written consent of Veeder-Root.

Contact TLS Systems Technical Support for additional troubleshooting information at 800-323-1799.

DAMAGE CLAIMS / LOST EQUIPMENT

Thoroughly examine all components and units as soon as they are received. If any cartons are damaged or missing, write a complete and detailed description of the damage or shortage on the face of the freight bill. The carrier's agent must verify the inspection and sign the description. Refuse only the damaged product, not the entire shipment.

Veeder-Root must be notified of any damages and/or shortages within 30 days of receipt of the shipment, as stated in our Terms and Conditions.

VEEDER-ROOT'S PREFERRED CARRIER

1. Contact Veeder-Root Customer Service at 800-873-3313 with the specific part numbers and quantities that were missing or received damaged.
2. Fax signed Bill of Lading (BOL) to Veeder-Root Customer Service at 800-234-5350.
3. Veeder-Root will file the claim with the carrier and replace the damaged/missing product at no charge to the customer. Customer Service will work with production facility to have the replacement product shipped as soon as possible.

CUSTOMER'S PREFERRED CARRIER

1. It is the customer's responsibility to file a claim with their carrier.
2. Customer may submit a replacement purchase order. Customer is responsible for all charges and freight associated with replacement order. Customer Service will work with production facility to have the replacement product shipped as soon as possible.
3. If "lost" equipment is delivered at a later date and is not needed, Veeder-Root will allow a Return to Stock without a restocking fee.
4. Veeder-Root will NOT be responsible for any compensation when a customer chooses their own carrier.

RETURN SHIPPING

For the parts return procedure, please follow the appropriate instructions in the "General Returned Goods Policy" pages in the "Policies and Literature" section of the Veeder-Root **North American Environmental Products** price list. Veeder-Root will not accept any return product without a Return Goods Authorization (RGA) number clearly printed on the outside of the package.

FOR INSTALLATIONS IN THE STATE OF CALIFORNIA

Please refer to the California Air Resources Board Vapor Recovery Certification Phase II EVR Executive Order web site (*www.arb.ca.gov/vapor/eo-evrphaseII.htm*) for the latest manual revisions pertaining to Executive Order VR 203 (VST Phase II EVR System) and VR 204 (VST Phase II EVR System Including ISD System).

©Veeder-Root 2009. All rights reserved.

Introduction

Contractor Certification Requirements 1
Related Manuals 1
Safety Precautions 1
Before You Begin 3
Veeder-Root Parts 4

Standard Vent Stack Installation Procedure 5

Alternate Vent Stack Installations

Alternate Vent Stack Installations 12
Offset Mount Installations 13

Test Port Installation

Standard Installation Procedure 16
Alternate Lowering of the Upper Test Port 16

Maintenance

Sensor Housing Kit (P/N 330020-644) 17
Filter Kit (P/N 330020-645) 18
Valve Enclosure Assembly Kit (P/N 330020-643) 19
Thermal Probe Kit (P/N 330020-653) 21

Figures

Figure 1. Typical direct wired installation example 6
Figure 2. Installing CCVP onto bracket 7
Figure 3. Inlet plumbing detail and classified area definition 8
Figure 4. Locating the CCVP vapor valve connector 9
Figure 5. Field wiring CCVP vapor valve 9
Figure 6. Epoxy sealing CCVP vapor valve field wiring connections 10
Figure 7. Attaching CCVP vapor valve wiring to TLS-350 console 10
Figure 8. Through canopy w/extended plumbing 12
Figure 9. Vent stack mounting 12
Figure 10. Offset mount on a 2” or 3” pipe 14
Figure 11. Offset mount on a supported riser 15
Figure 12. Optional lowering of upper test port 16
Figure 13. Removing sensor housing assembly 17
Figure 14. Replacing sensor housing assembly 17
Figure 15. Accessing the valve filter and o-ring 18
Figure 16. Replacing the valve filter and o-ring 18
Figure 17. Removing vapor valve assembly 19
Figure 18. Replacing vapor valve assembly 20
Figure 19. CCVP thermal probe 21
Figure 20. Preparing the thermal probe cable for the protective boot 22
Figure 21. Positioning the tie wrap over the probe cable’s protective boot 22

Tables

Table 1. CCVP 2” Installation Kit 4
Table 2. CCVP 3” Installation Kit 4
Table 3. CCVP Replacement Parts Kits 4

Introduction

This manual contains instructions to install a Veeder-Root Carbon Canister Vapor Polisher (CCVP) into a gasoline tank vent pipe.

Contractor Certification Requirements

Veeder-Root requires the following minimum training certifications for contractors who will install and setup the equipment discussed in this manual:

Installer (Level 1) Certification: Contractors holding valid Installer Certification are approved to perform wiring and conduit routing; equipment mounting; probe, sensor and carbon canister vapor polisher installation; tank and line preparation; and line leak detector installation.

TLS-350 Technician (Level 2/3 or 4) Certification: Contractors holding valid TLS-350 Technician Certifications are approved to perform installation checkout, startup, programming and operations training, troubleshooting and servicing for all Veeder-Root TLS-300 or TLS-350 Series Tank Monitoring Systems, including Line Leak Detection and associated accessories.

In-Station Diagnostics (ISD-PMC) Technician Certification: ISD PMC Contractors holding a valid ISD/PMC Certification are approved to perform (ISD/PMC) installation checkout, startup, programming, and operations training. This training also includes troubleshooting and service techniques for the Veeder-Root In-Station Diagnostics system. A current Veeder-Root Technician Certification is a prerequisite for the ISD/PMC course.

Veeder-Root ISD/PMC Including Carbon Canister Vapor Polisher Contractor Certification: This Certification includes Executive Orders 203, 204 and the Veeder-Root Vapor Polisher. This certification is required for setup and service of the Veeder-Root Vapor Polisher.

Warranty Registrations may only be submitted by selected Distributors.

Related Manuals

576013-879 TLS-3XX Series Consoles Site Prep Manual

577013-949 In-Station Diagnostics Install, Setup & Operation Manual

577013-948 Pressure Management Control Install, Setup and Operation Manual

576013-858 Direct Burial Cable Installation Guide

Safety Precautions

The following safety symbols may be used throughout this manual to alert you to important safety hazards and precautions.

EXPLOSIVE
Fuels and their vapors are extremely explosive if ignited.

FLAMMABLE
Fuels and their vapors are extremely flammable.

ELECTRICITY High voltage exists in, and is supplied to, the device. A potential shock hazard exists.	**TURN POWER OFF** Live power to a device creates a potential shock hazard. Turn Off power to the device and associated accessories when servicing the unit.
READ ALL RELATED MANUALS Knowledge of all related procedures before you begin work is important. Read and understand all manuals thoroughly. If you do not understand a procedure, ask someone who does.	**USE SAFETY BARRICADES** Unauthorized people or vehicles in the work area are dangerous. Always use safety cones or barricades, safety tape, and your vehicle to block the work area.
WARNING Heed the adjacent instructions to avoid damage to equipment, property, environment or personal injury.	**WEAR EYE PROTECTION** Wear eye protection when working with pressurized fuel lines or epoxy sealant to avoid possible eye injury.
INJURY Careless or improper handling of materials can result in bodily injury.	**GLOVES** Wear gloves to protect hands from irritation or injury.

⚠ WARNING

This product is to be installed and operated in the highly combustible environment of a gasoline station where flammable liquids and explosive vapors may be present.

ATTEMPTING TO SERVICE TANK MONITORS AND EQUIPMENT WITHOUT PROPER TRAINING CAN CAUSE DAMAGE TO PROPERTY, ENVIRONMENT, RESULTING IN PERSONAL INJURY OR DEATH.

The following hazards exist:

1. **Electrical shock resulting in serious injury or death may result if power is on during installation and the device is improperly installed.**
2. **Product leakage could cause severe environmental damage or explosion resulting in death, serious personal injury, property loss and equipment damage.**

Observe the following precautions:

1. **Read and follow all instructions in this manual, including all safety warnings.**
2. **Comply with all applicable codes including: the National Electrical Code; federal, state, and local codes; and other applicable safety codes.**
3. **Before installing this device, turn Off, tag/lock out power to the system, including console and submersible pumps.**
4. **To protect yourself and others from being struck by vehicles, block off your work area during installation or service.**
5. **Substitution of components may impair intrinsic safety.**

Before You Begin

- Comply with all recommended safety practices identified by OSHA (Occupational Safety and Health Administration) and your employer.
- The canister can only be installed in systems with a vapor recovery vent stack fitted with a UL Listed pressure/vacuum (P/V) valve that complies with California Air Resources Board (CARB) requirements and operates between -8 and +6 inches water column. The outlet of the carbon canister vapor valve has the same classified area requirements as the P/V valve per figure 3 and is subject to approval by the local authority having jurisdiction.
- Where separate intrinsically safe circuits are installed in the same raceway they must be segregated in accordance with Article 504 of the NEC.
- Review and comply with all the safety warnings in the installation manuals and any other national, state or local requirements.
- Consult figure 4 along with the National Electrical Code and the compliance section of 576013-879 TLS-3XX Series Consoles Site Prep Manual before installing the CCVP into the hazardous location. If the Carbon Canister is being wired directly to a TLS console, a 2-conductor, 18 AWG shielded cable must be installed in intrinsically safe conduit from the intrinsically safe wiring compartment of the TLS console to the carbon canister. Use of direct burial cable may be subject approval by the local authority having jurisdiction. See manual 576013-858 for a complete listing of required materials and an overview of direct burial installations.
- Use only UL certified Gas/TFE yellow Teflon tape on all fittings. Do not use pipe dope to seal pipe threads or fittings in and out of the CCVP.
- Customer supplied vent riser and vent riser fittings shall be standard full weight (ASTM Schedule 40) wrought iron or steel.
- Vapor polisher installation kit provides either 2" tee (Form Number 861290-002) or 3" reducing tee with busing (Form Number 861290-003) to reduce to 1/2" NPT. Customer supplied reducing tee must not reduce from 2" or 3" to less than 1/2" NPT. If tee reduces to larger than 1/2" use appropriate bushing to reduce the tee to 1/2" NPT.
- For new or rebuilt sites, it is recommended that the installation design specify a threaded fitting for joining the vent pipes to the underground piping system.
- Modification to plumbing in the inlet flow path (i.e., excessive bends) to the CCVP can result in non-compliance with local codes (ARB Exhibit 11 test) and may adversely affect performance if these installation guidelines are not followed. No liquid traps permitted.
- Vent riser threads shall be in accordance with the standard for pipe threads, general purpose (inch) ANSI/ASME B1.20.1-1983.
- The CCVP outlet shall be not less than 12 feet from grade.
- The CCVP outlet shall be located at least 15 feet from powered ventilation air intake devices.
- The CCVP must be mounted vertically.
- The structure to which the CCVP is mounted must be plumb and perpendicular to grade and independently supported and comply with all applicable codes.
- Offset piping and inlet piping to the CCVP shall be installed to avoid bends. No liquid traps permitted.
- Figures and illustrations in this manual represent typical installations and due to site to site variation, cannot represent all installation situations. Final installation must comply with all required codes per the jurisdiction having authority.

Veeder-Root Parts

- Veeder-Root Carbon Canister Vapor Polisher, Form No. 861290-002.

Table 1. CCVP 2” Installation Kit

Item	Qty.	Description	P/N
1	1	Carbon Canister	332761-002
2	1	Inlet Piping Kit	330020-638
3	1	2” Mounting Bracket Kit	330020-647
4	1	Group - 2” Pipe and Reducing Tee	332954-002
5	1	CCVP Installation Instructions	577013-920

- Veeder-Root Carbon Canister Vapor Polisher, Form No. 861290-003.

Table 2. CCVP 3” Installation Kit

Item	Qty.	Description	P/N
1	1	Carbon Canister	332761-002
2	1	Inlet Piping Kit	330020-638
3	1	3” Mounting Bracket Kit	330020-648
4	1	Group - 3” Pipe, Reducing Tee & Bushing	332954-003
5	1	CCVP Installation Instructions	577013-920

- Veeder-Root CCVP replacement parts kits. Note: Replacement part kits are not included with new canister assemblies and must be ordered separately, as needed. See the maintenance section of this manual for details.

Table 3. CCVP Replacement Parts Kits

Item	Qty.	Description	P/N
1	1	Valve Enclosure Assembly Kit	330020-643
2	1	Sensor Housing Kit	330020-644
3	1	Filter Kit	330020-645
4	1	Temperature Probe Kit	330020-653

Standard Vent Stack Installation Procedure

1. This procedure requires Veeder-Root installation kits and parts. When using customer provided parts refer also to the alternate vent stack installation procedures.
2. The TLS-3XX Site Prep Manual, P/N 576013-879, must be consulted for proper installation of direct wired carbon canisters into hazardous locations.
3. During the installation, all required national, state and local safety codes must be followed.
4. The CCVP contains an integral vapor valve that operates in conjunction with the pressure/vacuum (P/V) vent. Location of the vapor valve outlet must conform to the same requirements as the P/V vent. Reference Article 514 of the National Electrical code (NEC) and NFPA 30/30A.
5. Do not install the CCVP on unsupported vent pipes. For all customer supplied supports or strut assemblies, wind loading must comply with all required local, state and national codes and shall be rated for 88 pounds (minimum) static load.
6. **IMPORTANT! To ensure that the canister outlet is 12 feet (minimum) above grade, the CCVP mounting bracket must be positioned according to dimensions shown in Figure 1 and the U-bolts tightly clamped to the support structure before mounting the canister. The mounting bracket must be centered in line with the outlet of the tee before installing the CCVP.**
7. Following all required national, state, local and site safety precautions, carefully hang the CCVP's notched support tabs onto the top two side studs of its mounting bracket (Step 1 in Figure 2), swing the canister down until all of the slots in the canister's side mounting tabs seat against the studs in the bracket (Step 2 in Figure 2), then tighten the six side nuts to secure the canister onto its bracket (Step 3 in Figure 2).
8. Figure 3 shows important Class I Div 1, Group D and Class I Div 2, Group D radius spheres and operability test valve handle positions of the installed canister.
9. Install weather tight junction box, seal off and conduit per all NEC, state and local codes (see example installation in Figure 1).
10. Connect the two-pin connector of the 6-foot cable provided in the installation kit to the CCVP vapor valve, observing plug polarities (see Figure 4). The other end of this cable is passed through a kit supplied cord grip in the upper junction box.
11. Connect the white wire of the two conductor cable from the vapor valve to the positive sensor wire from the TLS console smart sensor interface module (see Figure 5). Connect the black wire on the two conductor cable to the negative sensor wire from the TLS console smart sensor interface module.
12. Following the instructions in Figure 6, seal the wire nuts of each of the two cable connections in the epoxy pack provided.
13. Attach CCVP vapor valve field wiring to the smart sensor interface module in the TLS console as shown in Figure 7.
14. Connect all lower fittings, valve and tubing between the vent pipe and the lower manifold on the CCVP (see Figure 3).
15. See the Test Port Installation section to install a test port for the Exhibit 12 test.
16. Confirm ball valve is in the open, canister to vent stack position (per Figure 3), then insert the clevis pin and secure with the hitch pin.
17. A passing pressure decay test, in accordance with CARB TP-201.3, must be completed after the CCVP is installed (see Exhibit 4 of VR 203 / VR 204).
18. A passing operability test must be completed in accordance with the procedures defined in VR 203 / VR 204 Exhibit 11 & 12.

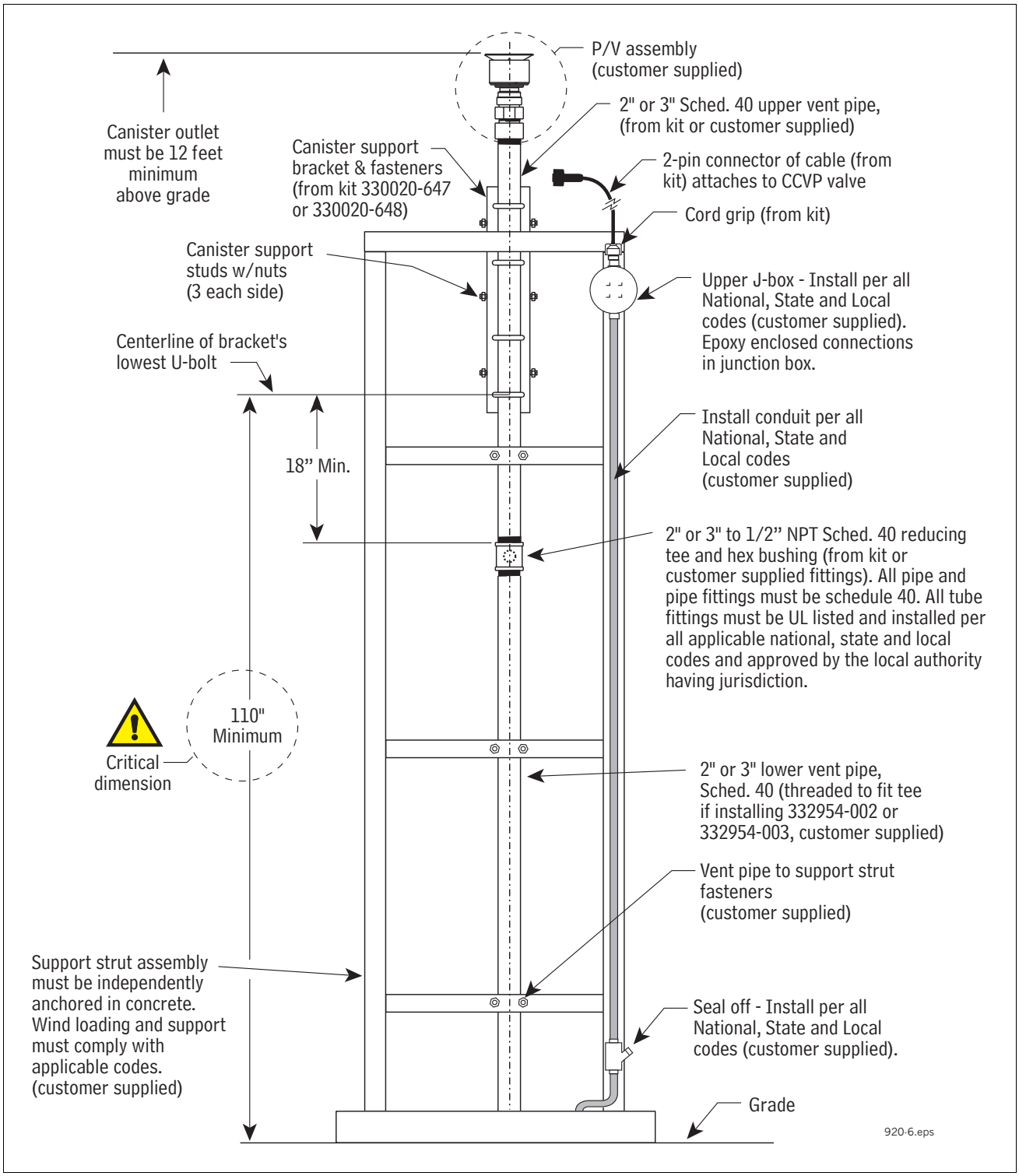

Figure 1. Typical direct wired installation example

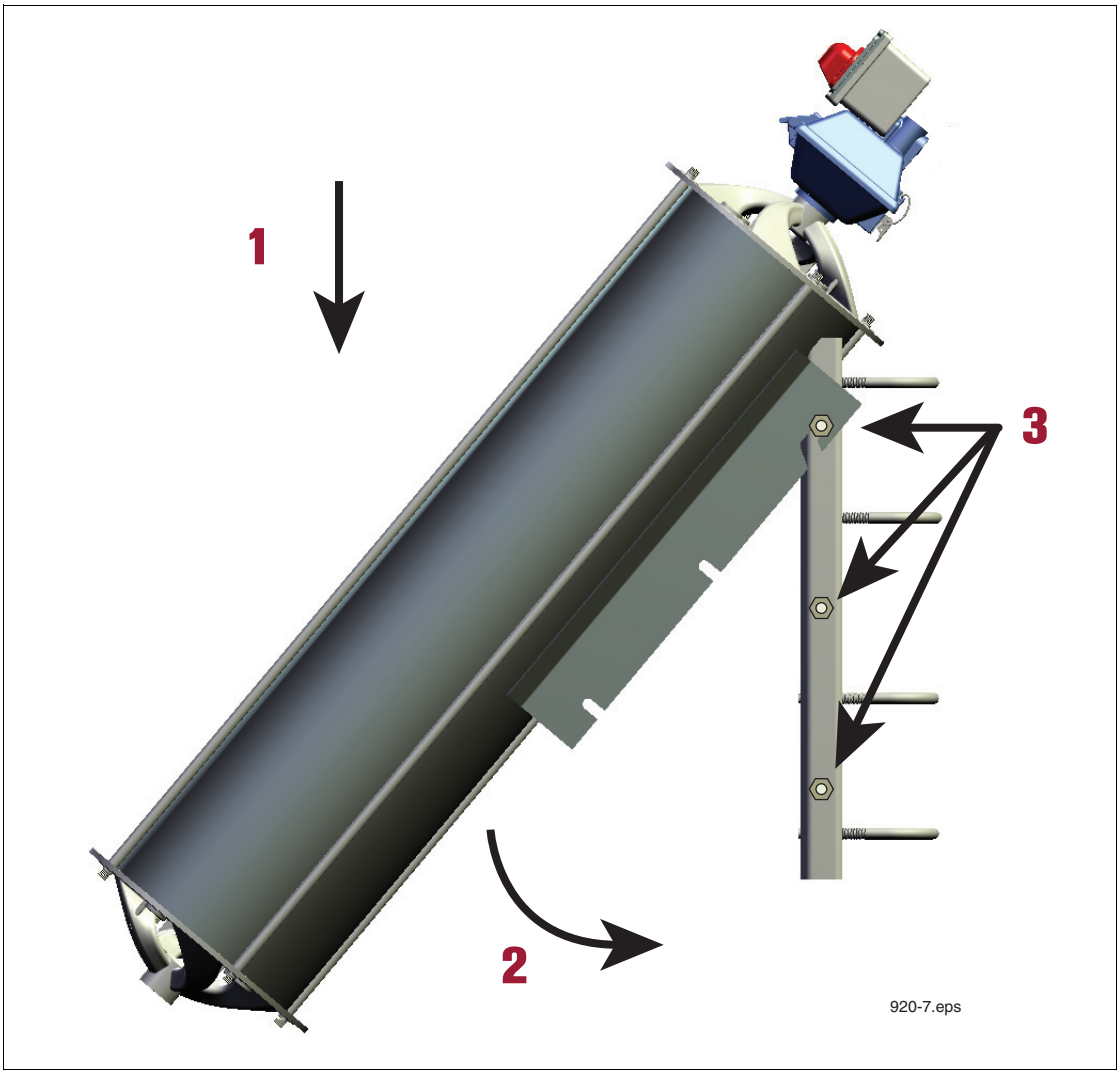

Figure 2. Installing CCVP onto bracket

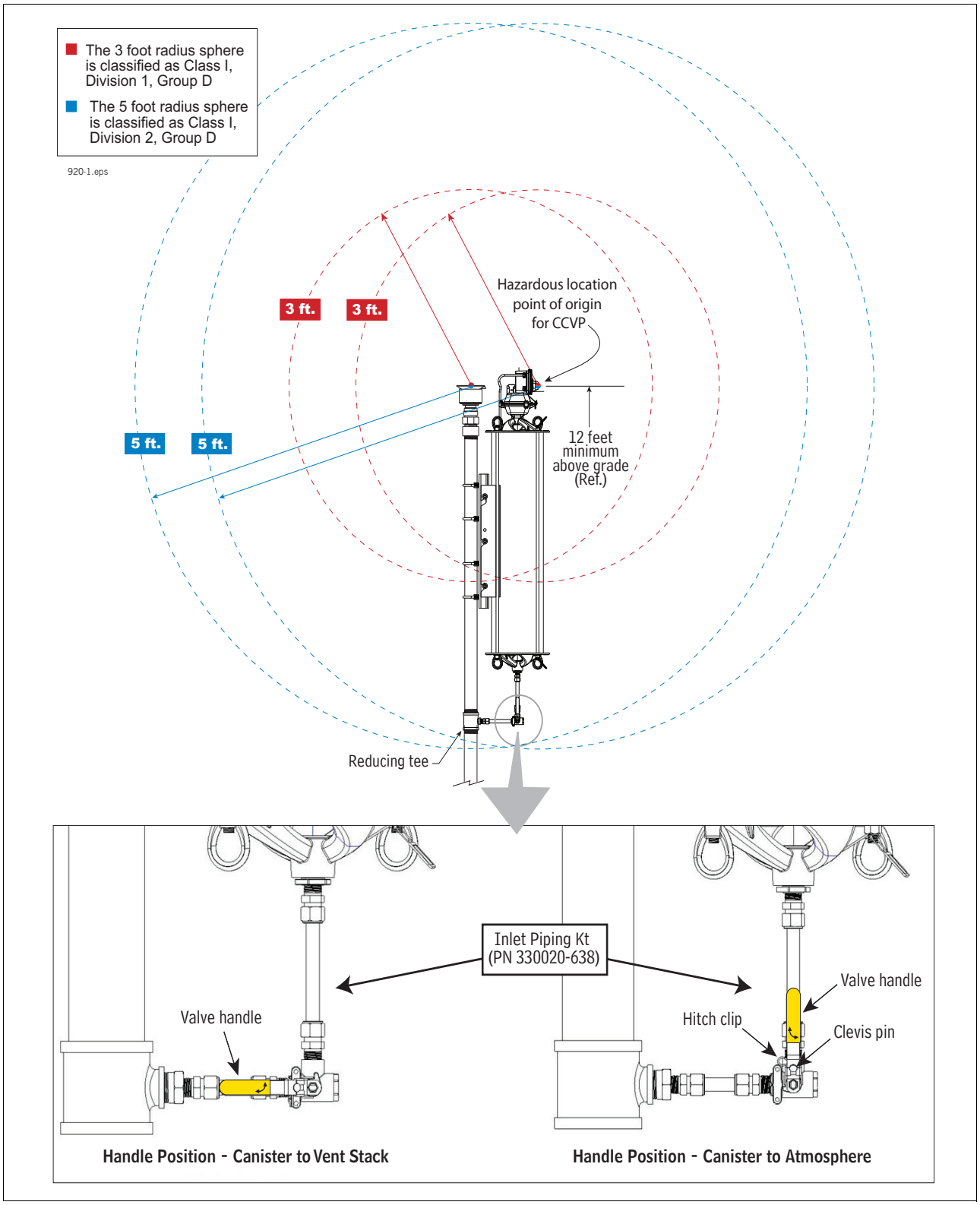

Figure 3. Inlet plumbing detail and classified area definition

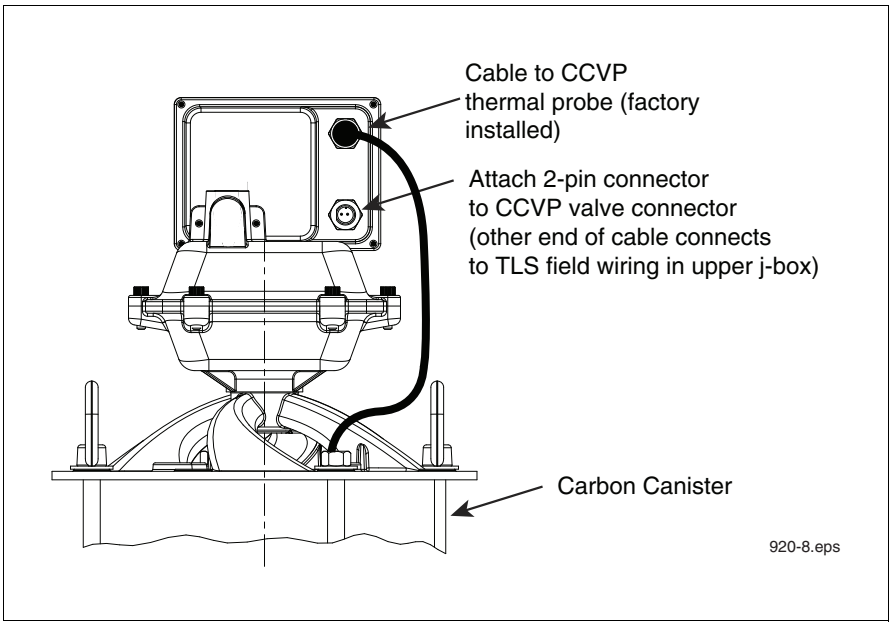

Figure 4. Locating the CCVP vapor valve connector

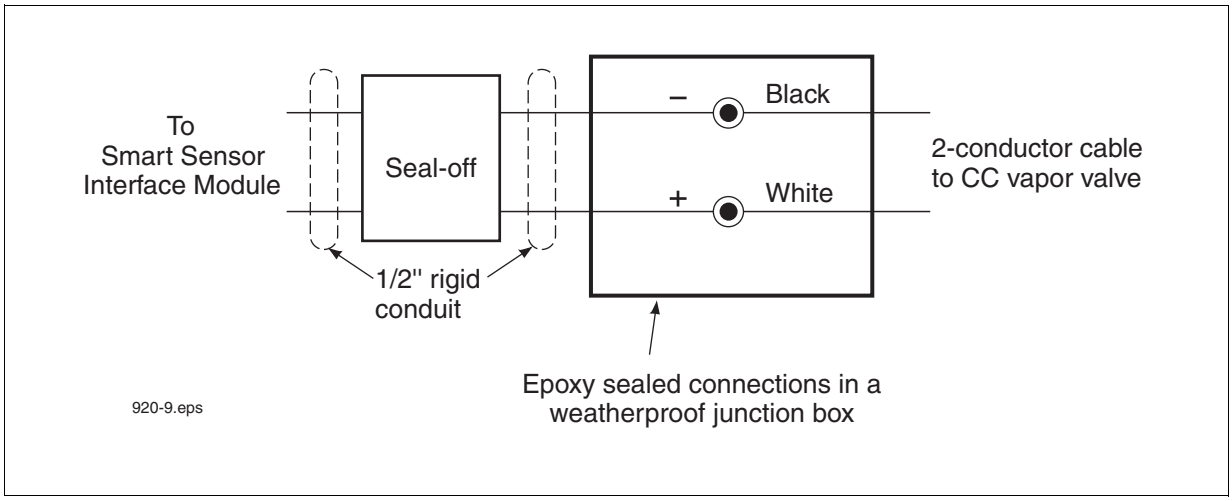

Figure 5. Field wiring CCVP vapor valve

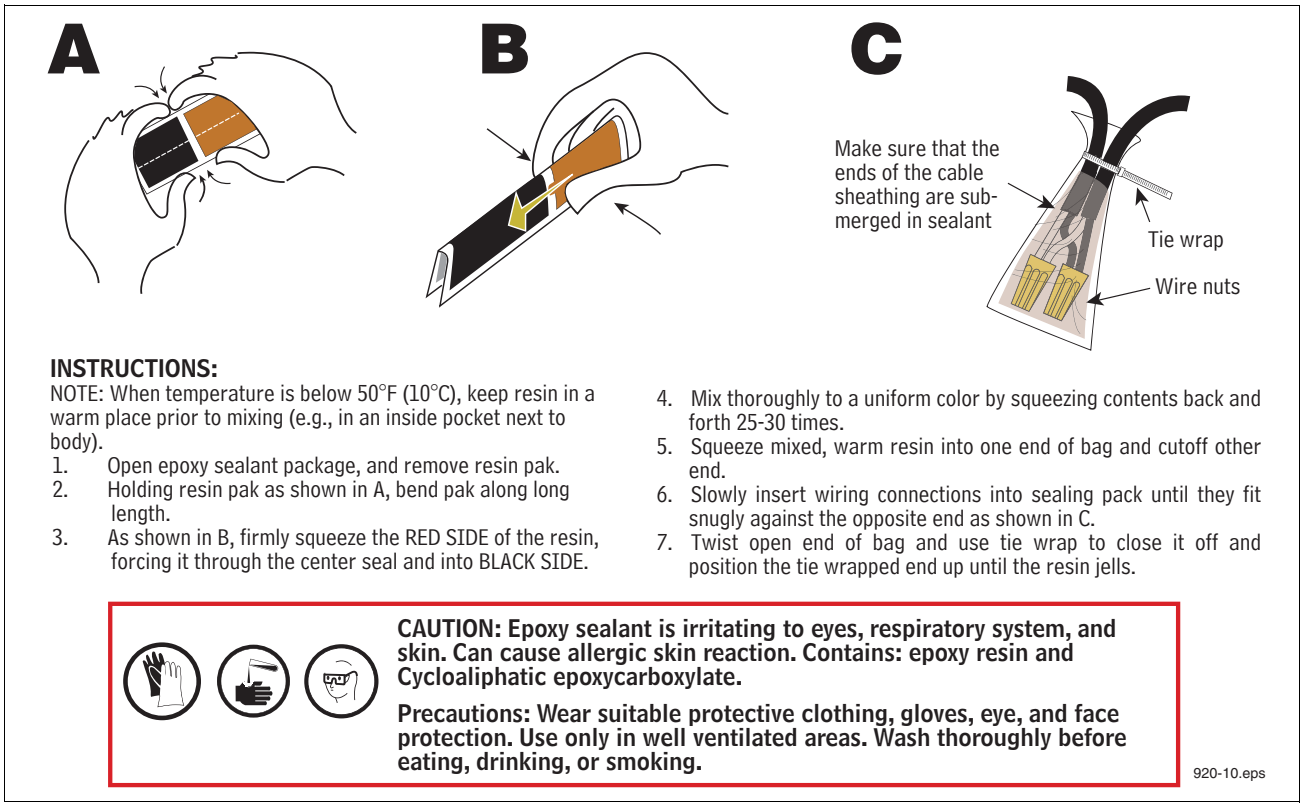

Figure 6. Epoxy sealing CCVP vapor valve field wiring connections

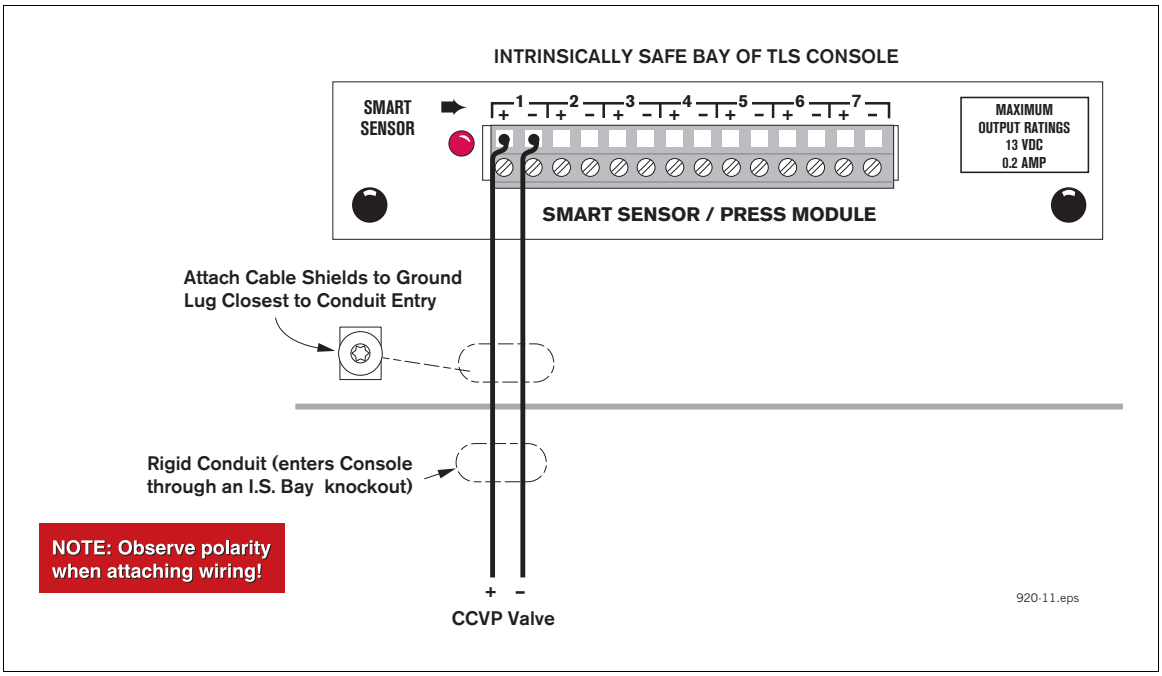

Figure 7. Attaching CCVP vapor valve wiring to TLS-350 console

Alternate Vent Stack Installations

IMPORTANT!

When a canister is not installed directly to a vent pipe, it is the responsibility of the site owner(s) to:

1. Provide suitably rated mounting locations designed for 88 lbs. (minimum) static load.
2. Provide adequate wind loading per all applicable local codes.
3. Follow all recommendations providing an unrestricted flow path into the canister that is free of liquid traps and minimizes the number of bends and turns in the piping. Any departure from the specified installation procedures, must conform to all local code requirements per the jurisdiction having authority.
4. All standard vent stack installation procedures and applicable codes, etc., apply.

Additional requirements are as follows:

- CCVP outlet shall be located not less than 5 feet above the canopy, see NFPA 30: 2008, clause 5.6.3.
- The vertical length of tubing between the 3-way valve and the CCVP can not exceed 12 feet.
- The horizontal length of tubing between the vent stack and the 3-way valve must not exceed 15". If a horizontal length of more than 15" is required use offset mounting installations procedures. No liquid traps permitted.
- Customer can supply the following inlet piping materials:
  - 5/8" O.D. x 0.065 wall thickness hard temper copper tubing. Alternatively, customer supplied standard full weight (ASTM Schedule 40) wrought iron or steel pipe (1/2" I.D. minimum) can be substituted subject to applicable codes.
  - ASTM Schedule 40 wrought iron or steel, 2" or 3" vent riser pipe and pipe fittings
- Vapor Polisher installation kit provides either 2" tee (Form Number 861290-002) or 3" reducing tee with bushing (Form Number 861290-003) to reduce to 1/2" NPT. Customer supplied reducing tee must not reduce from 2" or 3" to less than 1/2" NPT. If tee reduces to larger than 1/2" use appropriate bushing to reduce the tee to 1/2" NPT.
- 3-way valve from the inlet piping kit must be used.

Follow the standard installation procedures when installing vapor polishers in configurations similar those in Figure 8 and Figure 9. All installations of this type must comply with NFPA 30/30A and NFPA 70 and are subject to the approval of the local authority having jurisdiction.

Alternate Vent Stack Installations

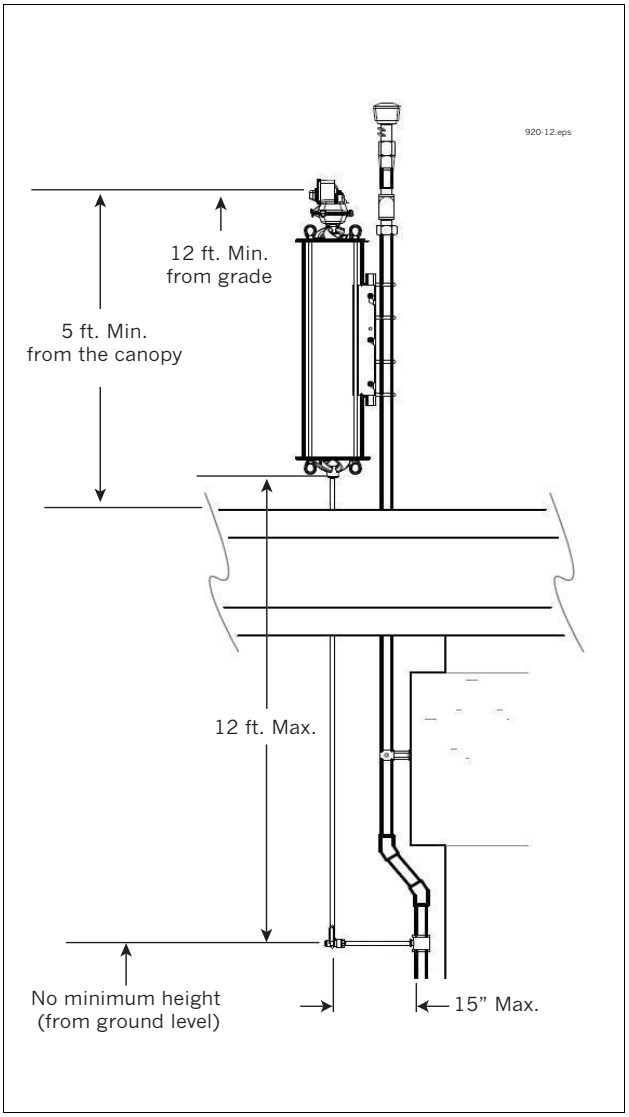

Figure 8. Through canopy w/extended plumbing

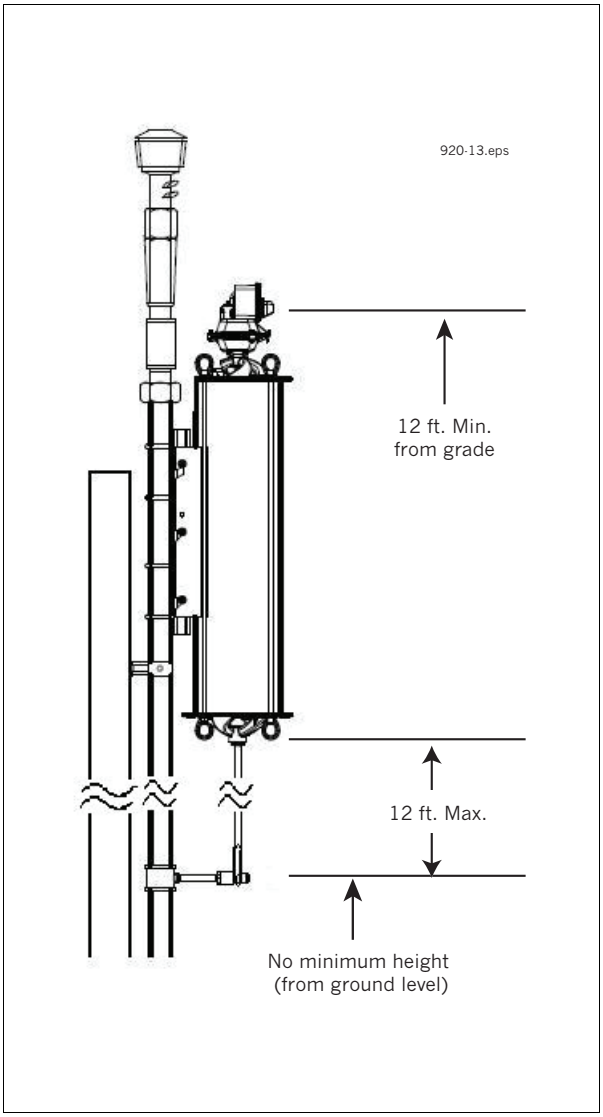

Figure 9. Vent stack mounting

Offset Mount Installations

The Vapor Polisher can be installed on an offset riser that is plumbed to the vent stack (see Figure 10 and Figure 11).

The manifold pipe between the vent riser and canister must not exceed 100 feet in length and must be at least 2-inch schedule 40 pipe with no liquid traps present and slope 1/8-inch per foot back to the vent riser to drain. To prevent the CCVP inlet piping from supporting the offset piping weight, provide additional support as required. Offset piping must be capped and comply with applicable local codes.

Flexible connections may be required by local jurisdiction having authority when offset mounting.

Flexible connections between the CCVP's offset piping and the vent riser are allowable if required by the local authority having jurisdiction to meet seismic requirements.

- Should the flex connection be installed such that it is not supported, the slope of the flex connection from the CCVP back to the vent riser shall be greater than the 1/8-inch per foot slope required for the rest of the piping.
- The flexible connector must be UL approved for a service station above-ground application.
- The local contractor is responsible to provide all necessary schedule 40 piping, pipe fittings and pipe cap.
- The Hazardous Location Area Classification shown for the CCVP in Figure 3 must be considered from the point of origin for all offset mountings.

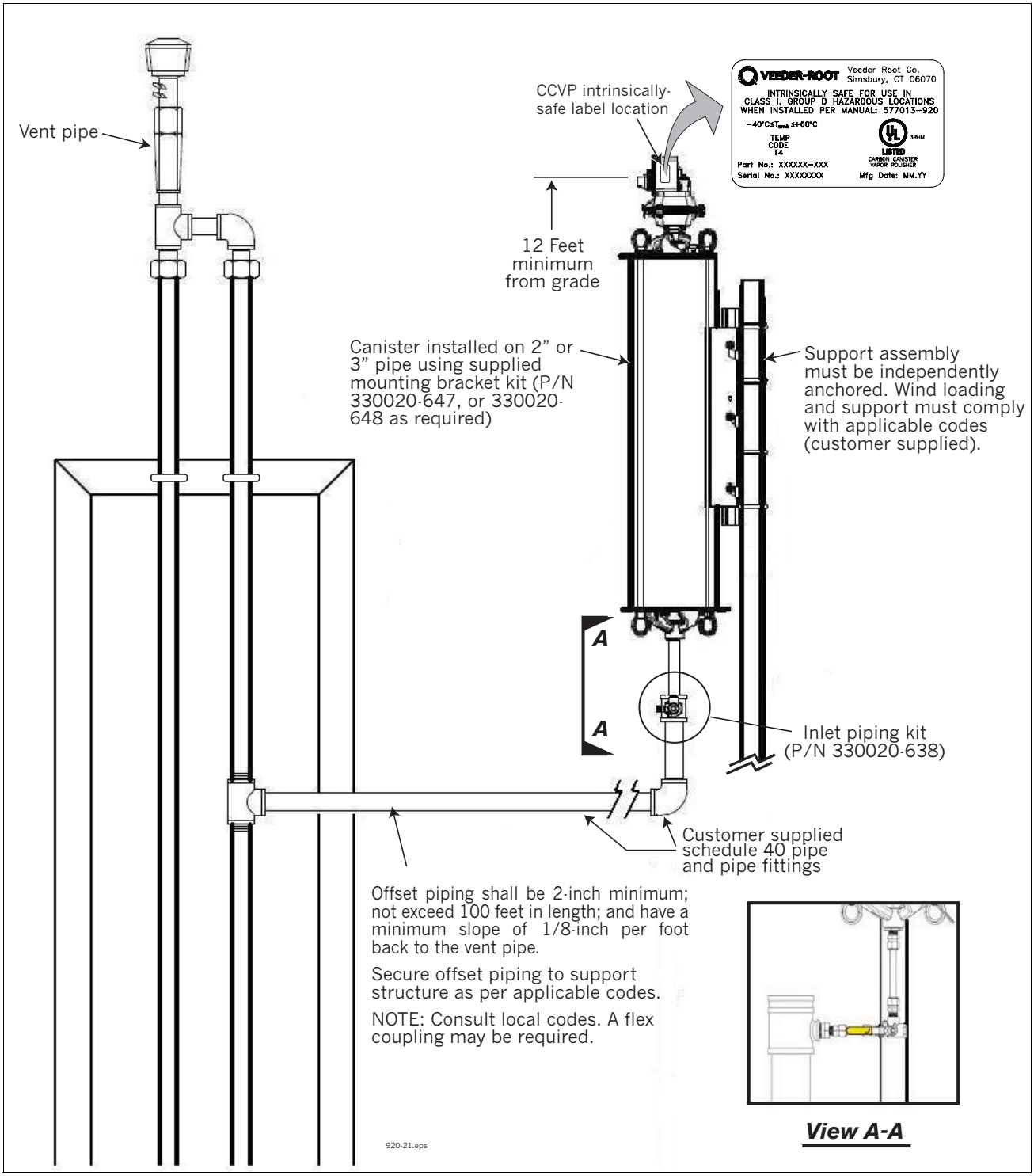

Figure 10. Offset mount on a 2" or 3" pipe

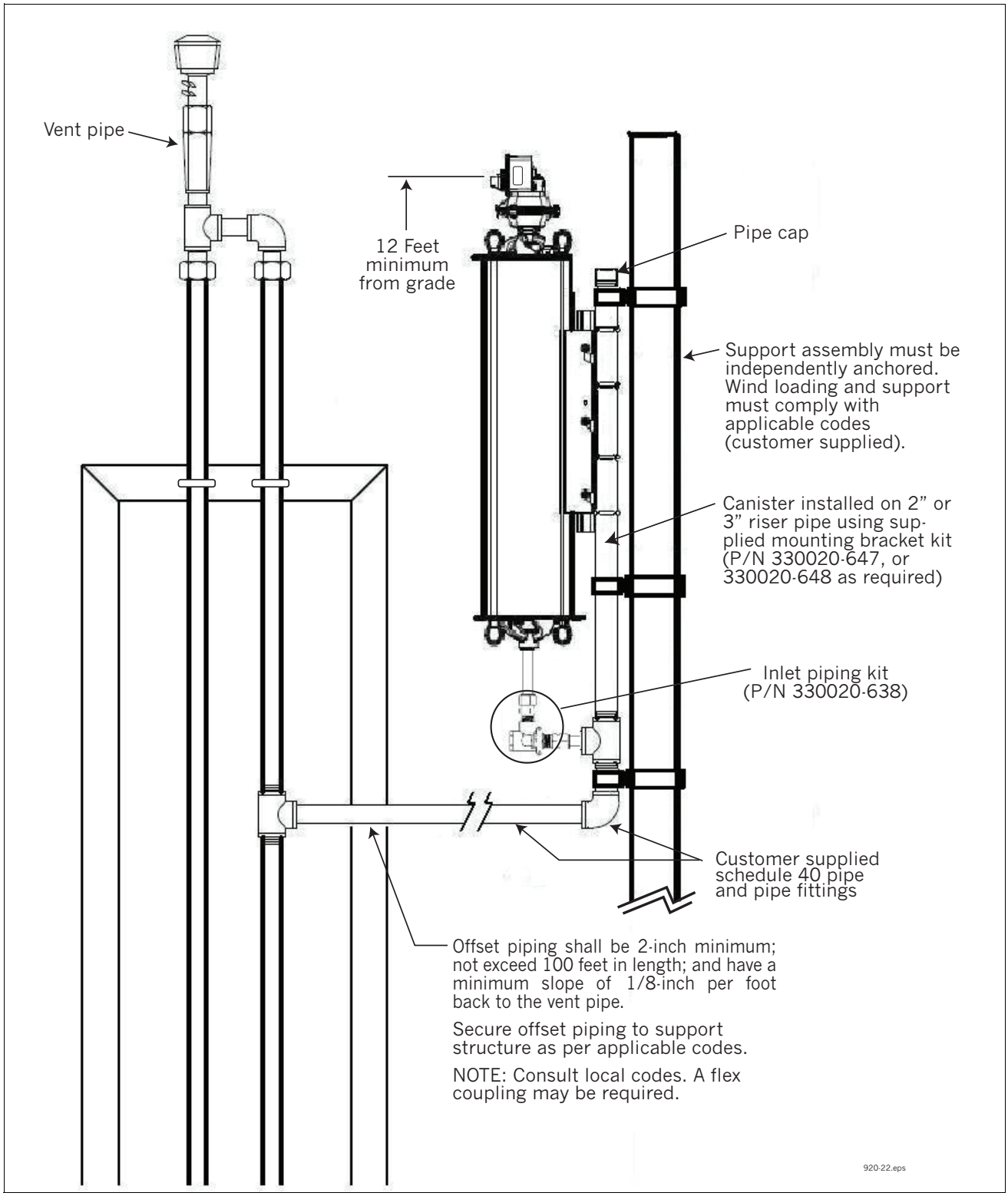

Figure 11. Offset mount on a supported riser

Test Port Installation

Standard Installation Procedure

1. Remove 1/4-inch plug from upper manifold.
2. Install customer supplied schedule 40, 1/4-inch male-to-male with 90 degree elbow NPT fitting by applying Teflon™ tape to the threads and tighten ¼ turn past snug.
3. Install the outlet test port cap by applying Teflon™ tape to the threads and tighten the cap ¼ turn past snug.
4. Perform the CCVP integrity test (VR-203 & VR-204 Exhibit 11).

Alternate Lowering of the Upper Test Port

In some installations it may be desirable to have the upper test port more accessible. The steps below describe this procedure.

1. Refer to Figure 12 to install optional piping necessary to lower the CCVP's operability (upper) test port.
2. Use schedule 40, 1/4-inch pipe and pipe fittings (customer supplied) - install per all applicable codes.
3. Perform the CCVP integrity test (VR-203 & VR-204 Exhibit 11).

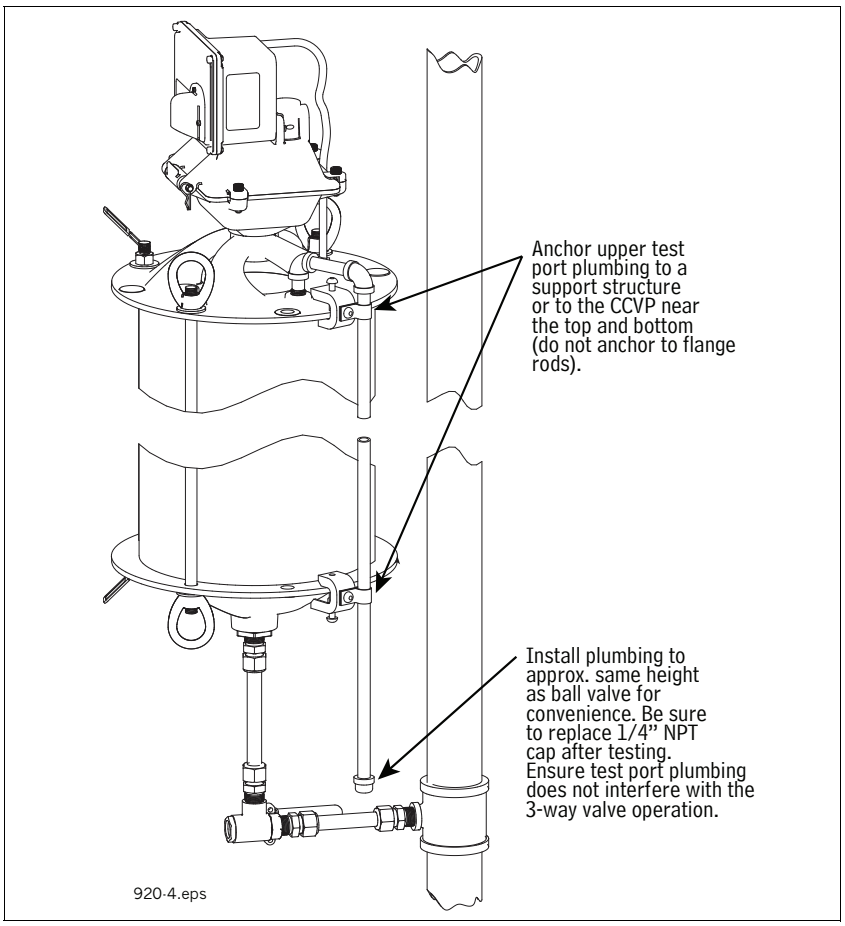

Figure 12. Optional lowering of upper test port

Sensor Housing Kit (P/N 330020-644)

1. Remove the three #25 torx screws holding the sensor housing assembly to the vapor valve assembly (see Figure 13).
2. Pull the sensor housing assembly straight out (unplugging it).
3. Align the replacement sensor housing assembly's connector with the connector in the vapor valve assembly and push in the assembly until it seats against the vapor valve assembly (see Figure 14).
4. Replace the three #25 torx screws in the sensor housing assembly cover until tight.

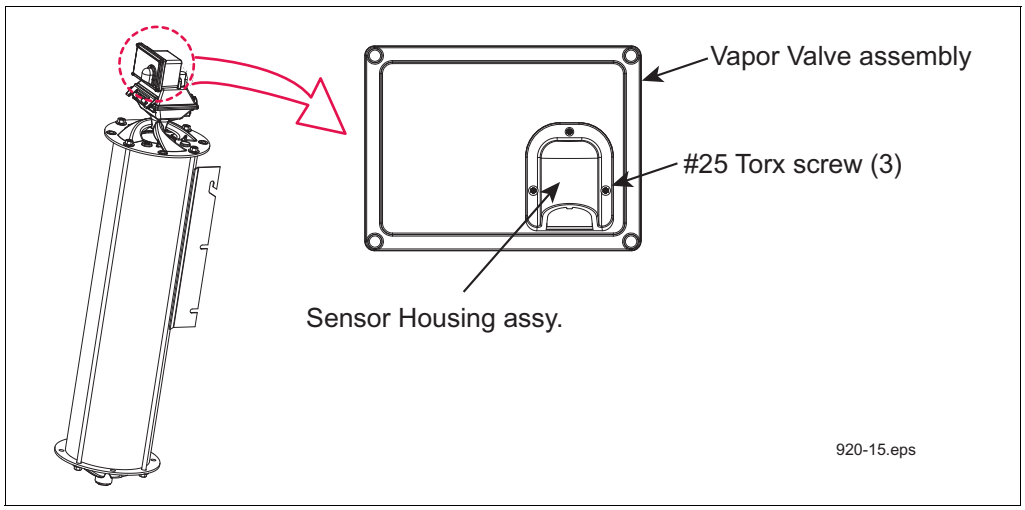

Figure 13. Removing sensor housing assembly

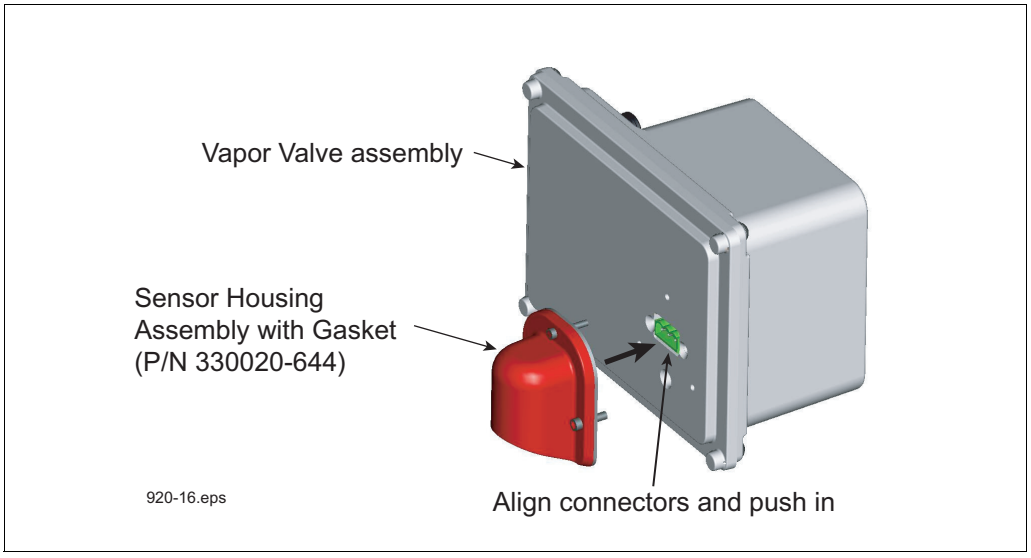

Figure 14. Replacing sensor housing assembly

Filter Kit (P/N 330020-645)

1. Remove the four 1/4-20 x 1 inch hex key bolts from the top of the vapor valve filter housing (see Figure 15).
2. Swing the housing top back and remove the filter plate from its seat and the o-ring from its groove in the vapor valve filter housing's lower half (see Figure 16).
3. Install a new o-ring in the groove and insert a new filter plate into its seat in the lower half of the housing, close the cover and screw in the four 1/4-20 hex key bolts until tight.
4. Perform the CCVP integrity and flow test (VR-203 & VR-204 Exhibit 11).

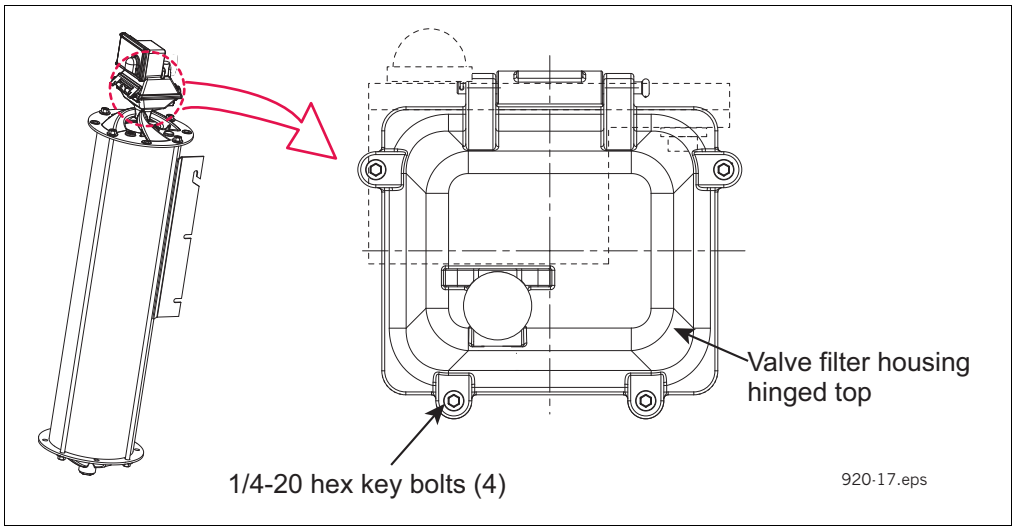

Figure 15. Accessing the valve filter and o-ring

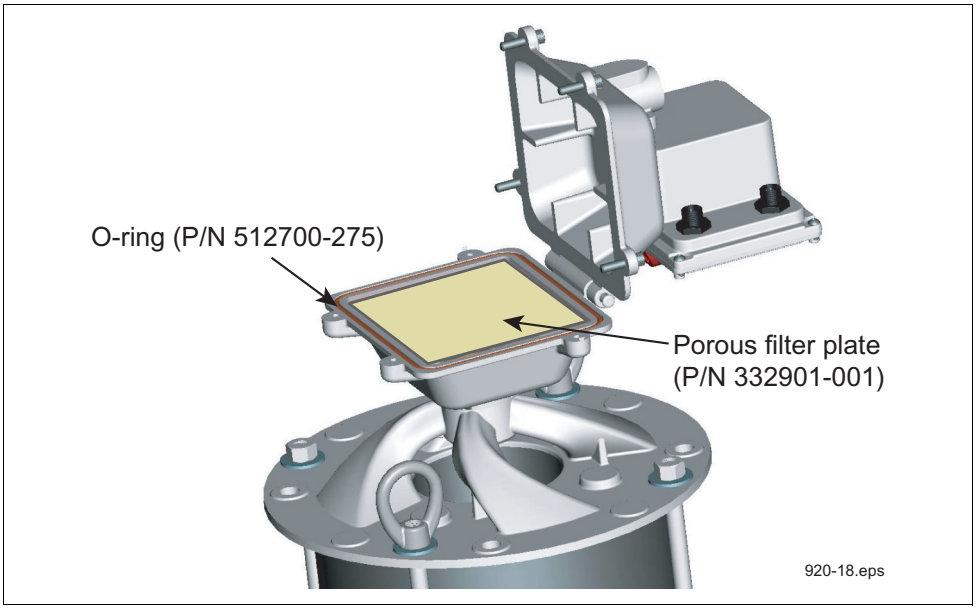

Figure 16. Replacing the valve filter and o-ring

Valve Enclosure Assembly Kit (P/N 330020-643)

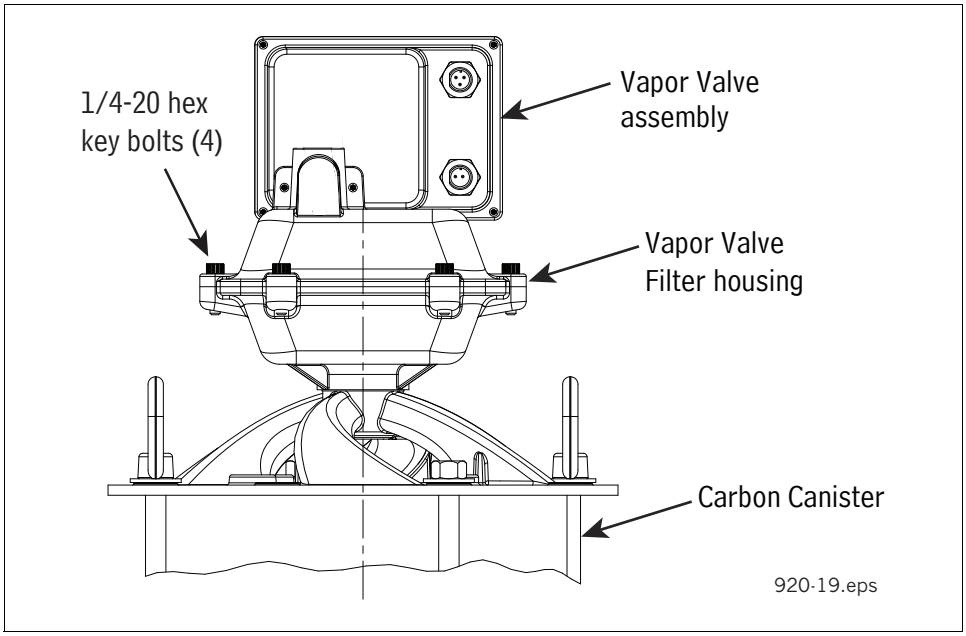

Figure 17. Removing vapor valve assembly

1. Remove the cables from the two connectors on the rear of the vapor valve assembly.
2. Remove the four 1/4-20 x 1 inch hex key bolts from the top of the vapor valve filter housing (see Figure 17).
3. Remove the hitch clip from the long clevis pin in the front hinge of the vapor valve assembly and vapor valve filter housing (see Figure 18).
4. Push the long clevis pin out and free of the hinge bores and lift up the vapor valve assembly. Be careful not to damage the filter in the vapor valve filter housing.
5. Place the new vapor valve assembly onto the vapor valve filter housing and push the long clevis pin through the hinge bores. Insert the hitch pin in the hole in the end of the clevis pin.
6. Screw in the four 1/4-20 hex key bolts until tight.
7. Reconnect the two cables to the two connectors on the vapor valve assembly.
8. Perform the CCVP integrity and flow test (VR-203 & VR-204 Exhibit 11).

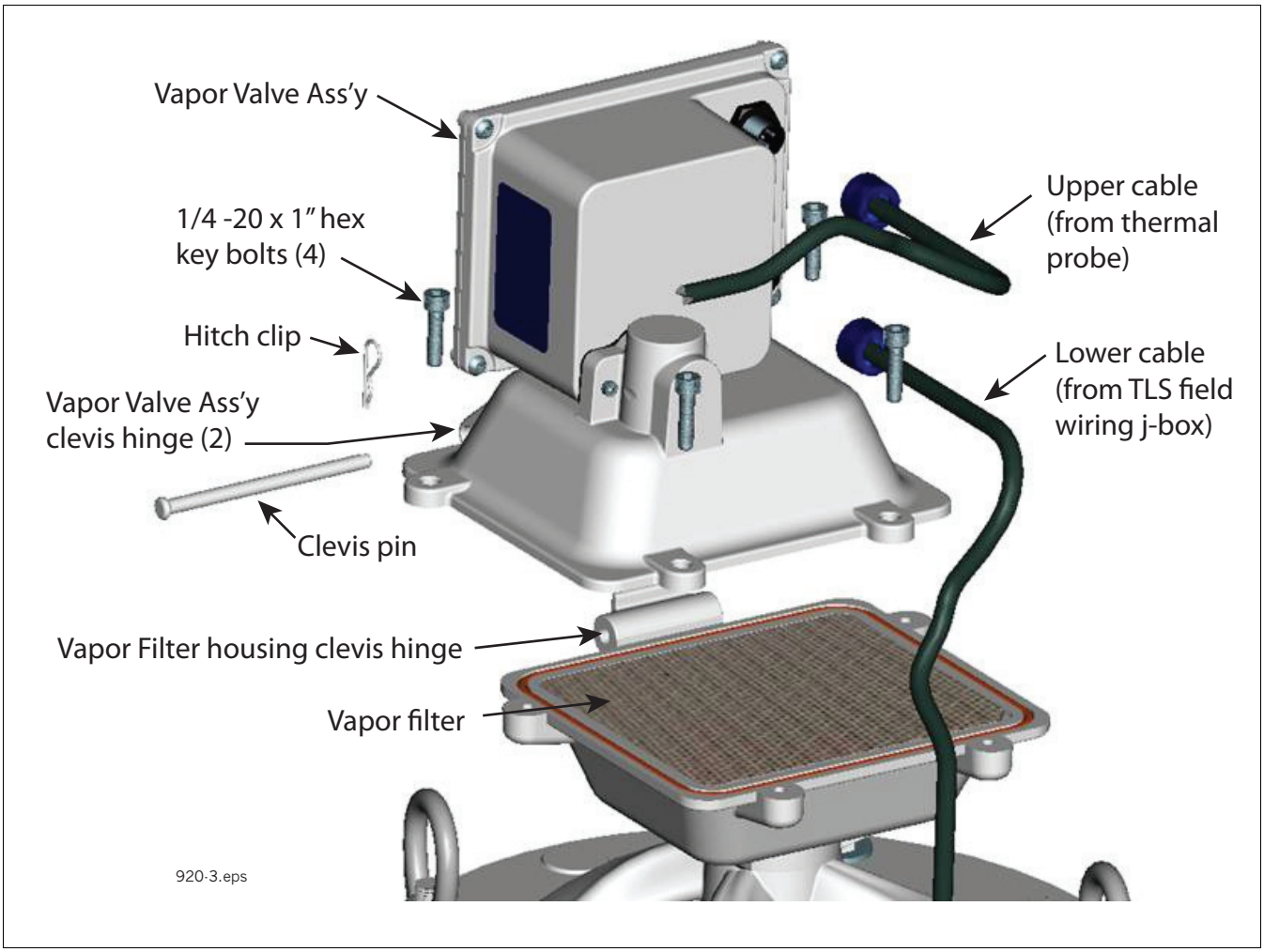

Figure 18. Replacing vapor valve assembly

Thermal Probe Kit (P/N 330020-653)

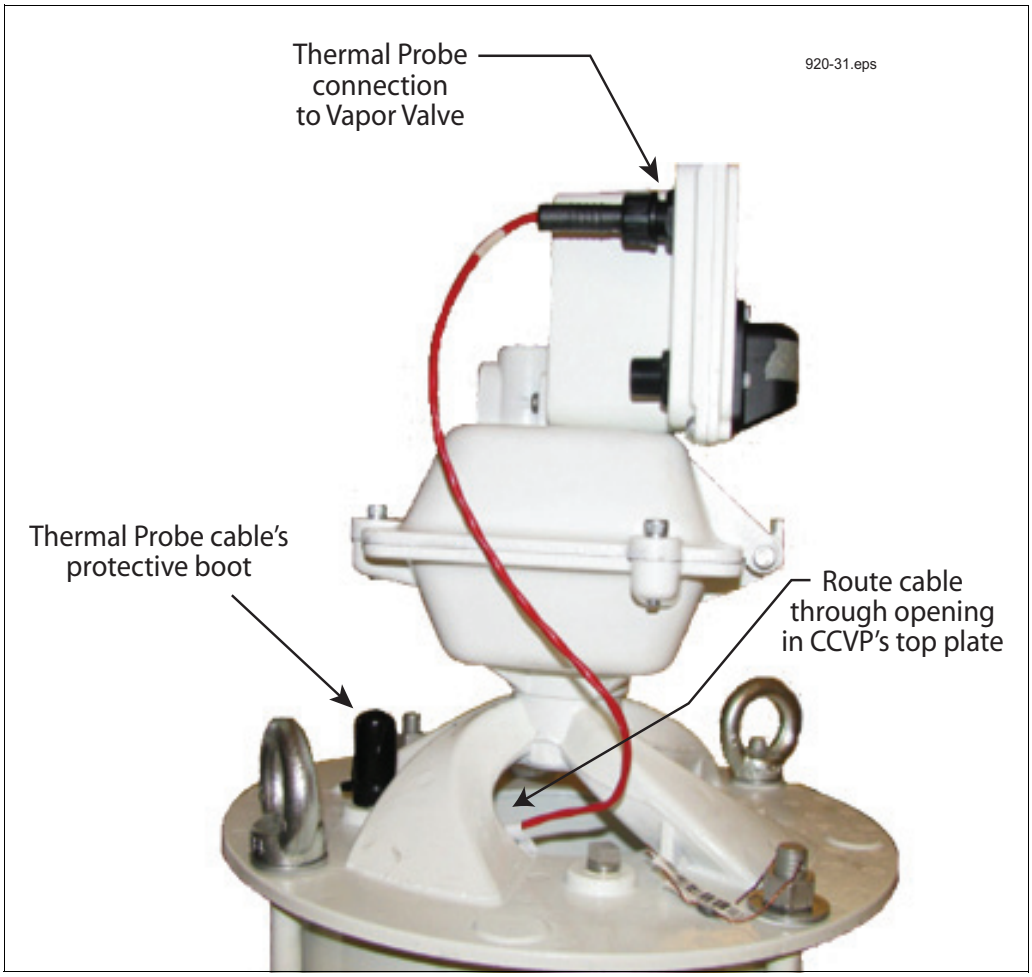

Figure 19. CCVP thermal probe

1. Cut the tie wrap around the thermal probe's protective boot and remove and set aside the boot. Remove the thermal probe cable connector from the back of the vapor valve assembly (see Figure 19).
2. Using a 9/16-inch open-end wrench, remove the thermal probe from the top of the CCVP.
3. Install and tighten the replacement thermal probe into its port in top of the CCVP.
4. Route the thermal probe connector cable through the opening in the top of the CCVP as shown in the above figure and attach the cable connector to the top port on the rear of the vapor valve assembly.
5. Make a small bend in the thermal probe cable no more than one inch above the probe hex nut (see Figure 20).
6. Slide the boot over the bend of the cable and push it down over the probe's hex nut until it rests on the top of the CCVP. Get a tie wrap from the kit and position it around the end of the boot just under the probe's hex nut and tighten it (see Figure 21).
7. Perform the CCVP integrity and flow test (VR-203 & VR-204 Exhibit 11).

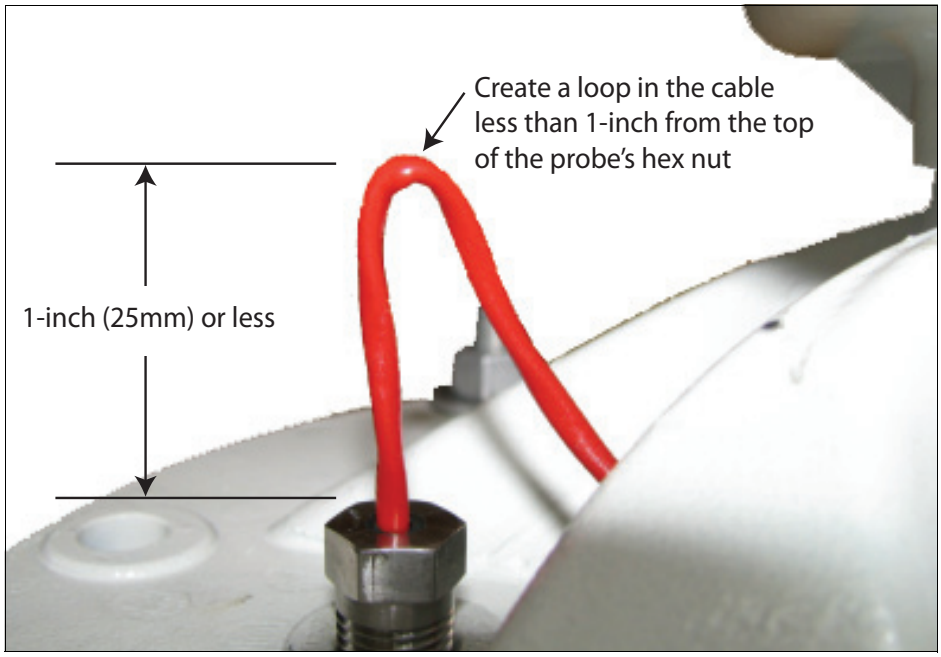

Figure 20. Preparing the thermal probe cable for the protective boot

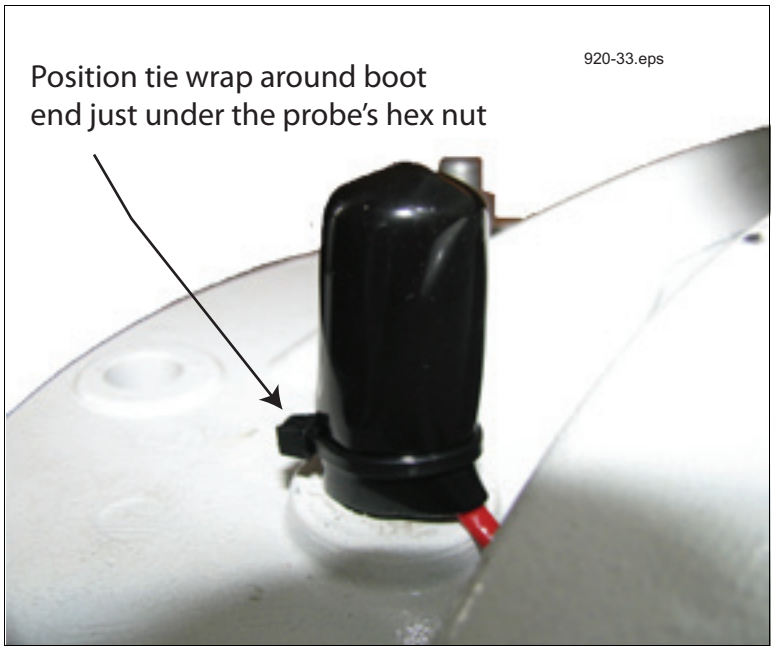

Figure 21. Positioning the tie wrap over the probe cable's protective boot

VEEDER-ROOT

For technical support, sales or other assistance, please visit:
www.veeder.com