Executive Order VR-204-G
VST Phase II EVR System Including Veeder-Root ISD

Exhibit 2
System Specifications

This exhibit contains the installation, maintenance and compliance standards and specifications that apply to the VST Phase II EVR System Including Veeder-Root ISD installed at a gasoline dispensing facility (GDF). All components must be installed, maintained, and operated in accordance with the specifications in the **ARB Approved Installation, Operation and Maintenance Manual** (IOM). Installation, maintenance and repair of system components, including removal and installation of such components in the course of any required tests, shall be performed by technicians certified by the appropriate manufacturer. Additional certifications may be required in accordance with local district requirements. Provided that there are no other local district requirements, a GDF owner/operator can remove and install nozzles, curb hoses, breakaways, and whip hoses without a manufacturer certification.

Nozzle

1. A vapor collection sleeve shall be installed on the nozzle at the base of the spout, as shown in **Figure 2B-1**.

2. The VST Model VST–EVR-NB nozzle has an integral vapor valve which prevents the loss of vapor from the underground storage tanks, ensures proper operation of the system and prevents the ingestion of air into the system. The performance of the nozzle vapor valve can be determined by items 2.1 or 2.2.

   2.1. The maximum allowable leak rate for the nozzle vapor path, as determined by TP-201.2B, shall not exceed 0.07 cubic feet per hour (CFH) at a pressure of two inches water column (2.00” WC)

   2.2. Verification of the integrity of the vapor valve can be performed on installed nozzles using the nozzle bag test procedure in Exhibit 10.

3. The gasoline flow rate of the nozzle shall be between six (6.0) and ten (10.0) gallons per minute as determined by the applicable provisions of section 6 or 7 of Exhibit 5 or by direct observation for 30 seconds minimum at the maximum hand held position.

Vapor Collection

1. The system pressure drop from the nozzle to the UST, as determined by TP-201.4 (Methodology 1) and Exhibit 14, shall not exceed the following:

   0.35 inches WC at a flow rate of 60 CFH of Nitrogen; and
   0.62 inches WC at a flow rate of 80 CFH of Nitrogen.

Coaxial Hoses

1. The maximum length of the curb hose, breakaway, and whip hose combined shall not exceed fifteen feet as measured from the base of the nozzle to the end of dispenser adapter or dispenser, as appropriate (Reference Exhibit 1, Figure 1A-2).

2. The liquid removal rate shall not be less than five milliliters per gallon (5 ml/gal) as determined by Exhibit 5 when tested with a gasoline flow rate between six (6.0) and ten (10.0) gallons per minute. Liquid removal requirement is applicable to all grade of gasoline.

3. All hoses shall have a permanent marking indicating the liquid pick-up location.

4. Any hose configuration is allowed when installed in accordance with IOM section 12.

Breakaway Couplings

1. The VST breakaway couplings are non-reconnecting and shall be replaced following a drive-off.

Flow Limiter

1. No flow limiter is allowed for this system.

VST ECS Membrane Processor

1. The processor vapor integrity shall demonstrate compliance with the static pressure decay criteria of TP-201.3 and Exhibit 4.

2. Unless there is maintenance or testing being conducted on the processor, the processor shall be on and in the automatic vapor processor mode and the three ball valves shall be locked in the open positions shown in **Figure 2B-2** for normal processor operation. The handles of the ball valves shall not be removed.

3. Piping to and from the processor shall be sloped 1/8” per foot minimum toward the vent line(s).

4. The hydrocarbon concentration of the ECS membrane processor taken from the Hydrocarbon Diagnostic Report shall be between ± one percent (±1%) for the zero and mid-range gas and ± two percent (±2%) for the high-range gas, when tested in accordance with Exhibit 6.

5. The Vapor Pressure Sensor shall be between +0.2 and –0.2 inches WC when tested in accordance with section 9 of Exhibit 8.

6. The processor shall activate when the pressure of the underground storage tank is less than or equal to 0.4 inches WC (≤0.4 inches WC) as determined by Exhibit 9.

7. The pressure reading from the TLS console shall be within ±0.2 inches WC of the measured ullage UST pressure as determined by section 8 of Exhibit 8.

8. The TLS-350 audible alarm shall be installed at a location that is most likely to be occupied by the station attendant during normal station operation (e.g., cash register).

9. The TLS console controlling the membrane shall have an RS232 port which shall be installed in a location that allows the RS232 port to be easily accessible, and if applicable per district requirements, for use at anytime. A vacant RS232 serial port shall always be available to electronically download reports.

10. The hydrocarbon concentration of the VST ECS Processor shall not exceed twelve percent (12%) as determined by accessing the Vapor Processor Status Report.

Veeder-Root Vapor Polisher

1. The carbon type shall be BAX G1500 manufactured by MeadWestvaco.

2. Unless there is maintenance or testing being conducted on the processor, the vapor polisher shall be on and in the automatic vapor processor mode and the inlet ball valve shall be locked in the open position shown in **Figure 2B-3** for normal polisher operation. The handle of the ball valve shall not be removed.

3. The pressure reading from the TLS console shall be within ±0.2 inches WC of the measured ullage UST pressure as determined by section 8 of Exhibit 8.

4. The Vapor Pressure Sensor shall be between +0.2 and –0.2 inches WC when tested in accordance with section 9 of Exhibit 8.

5. The Vapor Polisher pressure decrease between starting and ending pressures shall be less than 0.5 inches WC loss when tested in accordance with Exhibit 11. The ending pressure must be greater than 7.0 inches WC. Pressure drop across the Vapor Polisher at 18.0 standard cubic feet per hour flow shall be between 1.69 inches WC and 2.25 inches WC when tested in accordance with Exhibit 11. Differences in temperature readings shall not exceed 10 ºF when tested in accordance with Exhibit 11. The atmospheric pressure sensor reading shall be within 10% of the atmospheric pressure obtained from a local independent source when tested in accordance with Exhibit 11.

6. The hydrocarbon concentration from the vapor polisher outlet shall not exceed 9,000 ppm iso-butane (0.9% by volume iso-butane) when tested in accordance with Exhibit 12.

7. The TLS console controlling the vapor polisher shall have an RS232 port which shall be installed in a location that allows the RS232 port to be easily accessible, and if applicable per district requirements, for use at anytime. A vacant RS232 serial port shall always be available to electronically download reports.

8. Security seal tags must be installed on the vapor polisher. If for any reason the seal tags are damaged or missing, the district may require that Exhibit 11 and Exhibit 12 be conducted and pass prior to installing new security seal tags.

Pressure/Vacuum Vent Valves for Storage Tank Vents

1. All P/V vent valves shall be an ARB certified P/V valve for a Phase I system.

2. At least one pressure/vacuum (P/V) vent valve shall be installed on each tank vent. The maximum number of P/V vent valves allowed and P/V vent valve performance specifications are listed in the applicable Phase I EVR Executive Order. Vent lines may be manifold to minimize the number of P/V vent valves and potential leak sources, provided the manifold conforms to all applicable fire regulations. However, the vents connecting the vapor inlet and vapor outlet to the VST ECS Membrane Processor cannot be manifold together.

Vapor Recovery Piping Configurations

NOTE: Vapor Return Piping shall meet the requirements specified in section 4.11 of CP-201.

1. Vapor Return and Vent Lines

   For facilities installed on or after April 1, 2003, all vapor return and vent lines shall be a minimum nominal internal diameter of 2 inches from the dispensers or the vent stacks to the first manifold. All lines after the first manifold and back to the underground storage tank shall have a minimum nominal internal diameter of 3 inches.

   Note: Facilities permitted by a local district prior to April 1, 2003 shall be required to meet the three inch diameter standard only upon facility modification which involves the addition, replacement, or removal of 50 percent or more of the buried vapor piping.

2. All vapor return lines shall have a minimum slope of 1/8 inch per foot from the dispenser riser to the riser of the UST. A slope of 1/4 inch or more per foot is recommended wherever feasible.

3. The dispenser shall be connected to the riser with either flexible or rigid material that is listed for use with gasoline. The dispenser-to-riser connection shall be installed so that any liquid in the lines will drain toward the storage tank. The internal diameter of the connector, including all fittings, shall not be less than one inch (1").

   Note: The dispenser-to-riser connection is defined as the piping connection between the dispenser piping and the inlet of the dispenser riser. A vapor shear valve may also be part of the riser connection.

4. There is no length restriction for the vapor return piping of the system as long as the system complies with the maximum pressure drop requirement, item 1 of the Vapor Collection section.

5. No product shall be dispensed from any fueling point at a GDF installed with the VST Phase II EVR System if there is a vapor line that is disconnected and open to the atmosphere.

6. No liquid condensate traps or Bulk Plant Operations are allowed with this system.

Dispensers

1. The dispenser vapor piping must be sized adequately to meet the maximum pressure drop requirement, item 1 of the Vapor Collection section.

2. Dispenser vapor piping shall be installed so that any liquid in the lines will drain toward the dispenser riser.

In-Station Diagnostics (ISD)

1. The gasoline dispensing facility operator/owner shall comply with local district requirements, if any, following a warning by the Veeder-Root In-Station Diagnostics (ISD) system and shut down of the submersible pumps to all gasoline tanks by the ISD systems.

2. Suggested Troubleshooting, found in Table 16-3 of the Veeder-Root In-Station Diagnostics (ISD) Install, Setup, and Operation Manual (ARB Approved Installation, Operation, and Maintenance Manual), recommends that certain tests be conducted to verify the cause of the ISD warning or failure alarms. Districts may require that these tests or other tests specified by the districts be conducted in response to the ISD alarms.

3. For this certification, the baseline vapor collection performance value used was 1.0. This value will not be used for enforcement purposes.

Phase I System

1. The Phase I system shall be an ARB-certified system that demonstrates compliance with the static pressure decay test criteria contained in TP-201.3 and Exhibit 4.

Maintenance Records

1. Each GDF operator owner shall keep records of alarms and maintenance performed at the facility. Such records shall be maintained on site in accordance with district requirements or policies. The records shall include alarm date and time, nature of the alarm, troubleshooting, maintenance or repair performed to validate and/or correct alarms, component, or system failures, date when maintenance or repair was conducted, name and Certified Technician Identification Number of individual conducting maintenance or test, affiliation, and telephone number. Additional information may be required in accordance with local district requirements. An example of a GDF maintenance and alarm record is shown in Figure 2B-13.

2. Maintenance shall be conducted in accordance with the Scheduled Maintenance section of the ARB approved Installation, Operation, and Maintenance Manual.

Vapor Recovery Equipment Defects

The following is deemed a defect for the affected fueling point(s) or system.

Fueling Points

1. The fueling point shall be removed from service when more than 30% of a nozzle face seal is missing (e.g., a triangular or similar shape in which greater than 2.5 inches of the faceplate circumference is missing (accumulated).

2. The fueling point shall be removed from service when more than 0.375 square inches of a nozzle vapor collection sleeve is missing (e.g., a rectangular shape of greater than nine/sixteenth (9/16) inches or more on each side, a circular shape of eleven/sixteenth (11/16) inches or more in diameter, or a triangular shape of seven/eighth (7/8) inches on the side.

3. The fueling point shall be removed from service when the total slit length in the convolutions exceeds 18 inches as determined by direct measurements.

4. The fueling point shall be removed from service when a hose is found to have greater than 175 ml of gasoline in the vapor side as determined by sections 6.1 to 6.5 of Exhibit 5. Note: Prior to draining gasoline from the vapor side of the VST hose, use VST tool P/N VST-STP-100 and plug the fuel spout. **Do not activate dispenser when draining gasoline from the vapor side of the VST hose.**

5. The fueling point shall be removed from service when VST system pressure drops exceeding the following conditions as determined by Methodology 1 of TP-201.4:

   5.00 inches WC at a flow rate of 60 CFH of Nitrogen; and
   8.00 inches WC at a flow rate of 80 CFH of Nitrogen.

6. The fueling point shall be removed from service when the dispensing rate is greater than ten (10) gallons per minute (gpm) or less than five (5) gpm as determined by the applicable provisions of section 6 or 7 of Exhibit 5 or by direct observation for 30 seconds minimum at the maximum hand held position.

7. The fueling point shall be removed from service when any hose has a visible opening as determined by direct observation.

8. The fueling point shall be removed from service when the insertion interlock mechanism allows dispensing when the bellow is uncompressed as determined by direct observation or GDF-09 (see Vapor Recovery Defects List).

9. The fueling point shall be removed from service when the nozzle automatic liquid shut-off mechanisms malfunction in any manner as determined by EPO No. 26-F (See Vapor Recovery Defects List) or direct observation.

10. The fueling point shall be removed from service when any nozzle has a defective vapor valve as determined by Exhibit 10 or when the vapor valve has a leak rate that exceeds 0.07 cubic feet per minute at a pressure of two (2) inches WC as determined by TP-201.2B.

11. The fueling point or system shall be removed from service when any component required by this Executive Order is absent, installed improperly or disconnected as determined by direct observation.

System with VST ECS Processor

1. The system shall be removed from service when the three ball valves on the VST ECS processor are not locked in the proper operating configuration (Figure 2B-2) as determined by direct observation.

2. The system shall be removed from service when the ECS membrane processor is not on or in the automatic vapor processor mode as determined by the Diagnostic section of the Pressure Measurement Control (Section 16) of IOM.

3. The system shall be removed from service when the VST ECS Processor alarms for emission factor are activated for two consecutive 24 hour periods as determined by direct observation.

System with Veeder-Root Vapor Polisher

1. The system shall be removed from service when the ball valve on the Vapor Polisher is not locked in the proper operating configuration (Figure 2B-3) as determined by direct observation.

2. The system shall be removed from service when the Vapor Polisher is not in the automatic mode as determined by the Diagnostic section of the Pressure Measurement Control (Section 19) of IOM.

Veeder-Root ISD System Specifications

TLS Console & ISD Software Version Number

The ISD audible alarm shall be installed at a location that is most likely to be occupied by the station attendant during normal station operation (e.g. cash register) to hear the alarm. The TLS console shall be installed in a location that allows the RS232 port to be easily accessible, and if applicable, per district requirements, for use at anytime. A vacant RS232 serial port shall always be available to electronically download reports.

The presence of ISD and the ISD software version number can be verified on the TLS Console LCD screen by using the <STEP> key or by using the TLS Console <PRINT> key to print and review the latest ISD Daily Report. **See Figures 2B-4** and **2B-5** for TLS and ISD verification instructions.

The TLS Console must have a printer as well as an RS232 interface port.

If the TLS is equipped with security features which prohibit access to the TLS, instructions to override these security features shall be maintained on site in accordance with air district requirements and shall be available to the air district upon request.

Operability Test Procedure

The Veeder-Root ISD operability test procedure provided in Exhibit 8 and Exhibit 11, and in section 16 of the ***ARB Approved Installation, Operation and Maintenance Manual*** (IOM), shall be used at GDF sites to determine the operability of the Veeder-Root ISD system to comply with applicable performance standards and performance specification in CP-201. Testing the ISD equipment in accordance with this procedure will verify the proper selection, setup and operation of the TLS Console sensors and interface modules.

The Vapor Flow Meter

The Veeder-Root ISD system requires one Vapor Flow Meter per dispenser installed in accordance with Section 18 **of *ARB Approved IOM* (*Veeder-Root ISD Balance Vapor Flow Meter Manual Installation Guide (577013-916, Rev. B)) for the Veeder-Root ISD System***. The Vapor Flow Meter is an intrinsically safe sensor that is wired to the TLS Console Smart Sensor Module via a conduit dedicated to TLS Console low-voltage sensors. **Figure 2B-6** shows the ISD Vapor Flow Meter. **Figures 2B-10** and **2B-11** show the installation configuration.

The Vapor Pressure Sensor

The Veeder-Root ISD system requires one Vapor Pressure Sensor per GDF installed into one of the dispensers located closest to the tanks (If a row of dispensers are equal distance from the tank pad and within 10' of each other, any dispenser can be used) in accordance with Section 17 of the ***ARB Approved IOM Manual***. For vapor vent stack installation, determine which vapor vent stack line is closest to the tank being monitored. Select this line for the addition of the pressure sensor. The connection must be BELOW the Veeder-Root Carbon Canister if equipped in accordance with Section 17 of the **ARB Approved IOM Manual**. **Caution:** Installation ot the pressure sensor on the vapor vent stack is only allowed at facilities equipped with a Veeder-Root Vapor Polisher or Franklin Fueling/Healy Clean Air Separator. The Vapor Pressure Sensor is an intrinsically safe sensor that is wired to the TLS Console Smart Sensor

Module via a conduit dedicated to TLS Console low-voltage sensors. **Figure 2B-7** shows an ISD Vapor Pressure Sensor illustration. **Figures 2B-10** and **2B-11** show the dispenser installation configuration. **Figure 2B-12** shows the vapor vent stack installation configuration.

Dispenser Interface Module (DIM)

Existing Dispenser Interface Modules or DIM communication cards are used to interface to the dispenser Point Of Sale (POS) or controller system to gather fuel transaction data. The ISD Operability Test Procedure provided in Exhibit 8 and Exhibit 11 and in Section 4 of the Veeder-Root ISD Install, Setup and Operation Manual for VST ECS Membrane Processors can be used to verify the proper selection and setup of the Dispenser Interface Module. See **Figure 2B-8** for a typical Dispenser Interface Module Illustration.

Tank Inventory Probe Sensor

Existing Tank Inventory Probe sensors (one per tank) are used to measure the amount of vapor space in the Underground Storage Tanks (USTs). The ISD Operability Test Procedure can be used to verify the proper selection and setup of the Tank Inventory Probes. See **Figure 2B-9** for a typical Tank Inventory Probe Sensor.

Shutdown Control

The TLS Console must be wired per Section 16 of ***ARB Approved IOM Manual (Veeder-Root ISD Install, Setup and Operation Manual for VST ECS Membrane Processors (557013-937, Rev. A))*** such that it shall automatically prohibit the dispensing of fuel through shutdown of all the gasoline turbine pumps during a CP-201 ISD failure alarm or TLS Console ISD system power loss.

TLS Console Modules

The ISD Operability Test Procedure in Exhibit 8 and Exhibit 11 and in section 16 of ***ARB Approved IOM Manual*** (Section 4 of the Veeder-Root ISD Install, Setup, and Operation Manual for VST ECS Membrane Processors)shall be used to verify the proper selection and setup of the TLS Console Modules.

Training Program

All Veeder-Root contractors must successfully complete the applicable Veeder-Root training program before they can install, startup, and service TLS Console equipment. Contractors must have up-to-date Level 1 certification to install the TLS Console ISD system. Contractors must have an up-to-date Level 2, 3 or 4 certification and the ISD certification to startup and service the ISD system. The schedule, fee and registration information for the Authorized Service Contractor (ASC) training program can be found at http://www.veeder.com.

To confirm TLS or ISD training a regulator should send an email to technicaltraining@gilbarco.com with the name (and company) of the ASC to obtain verification of the ASC TLS/ISD training status or call 800-997-7725 and press “*” to get to the Veeder-Root menu and “*” again to speak to a representative.

Maintenance

The TLS console, including interface modules, does not require scheduled maintenance. ISD System Self-Test Monitoring algorithms are designed to verify proper selection, setup and operation of the TLS console and sensors.

There is no recommended maintenance, inspection nor calibration for the Vapor Flow Meter or the Vapor Pressure Sensor. Servicing should be performed in response to warning or alarm conditions.

Figure 2B-1
Model VST-EVR- NB Nozzle

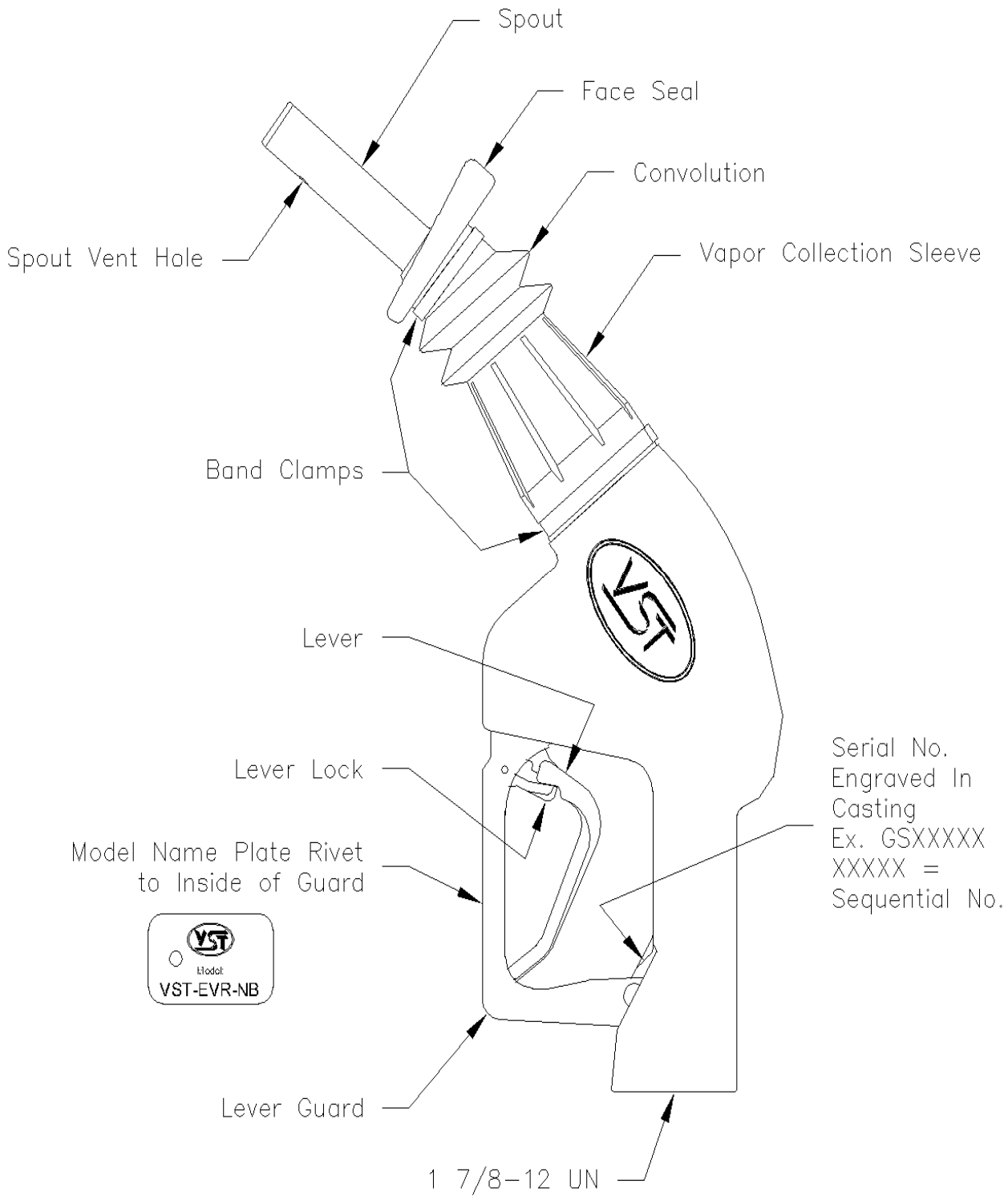

Figure 2B-2
Typical VST-ECS-CS3 Membrane Processor

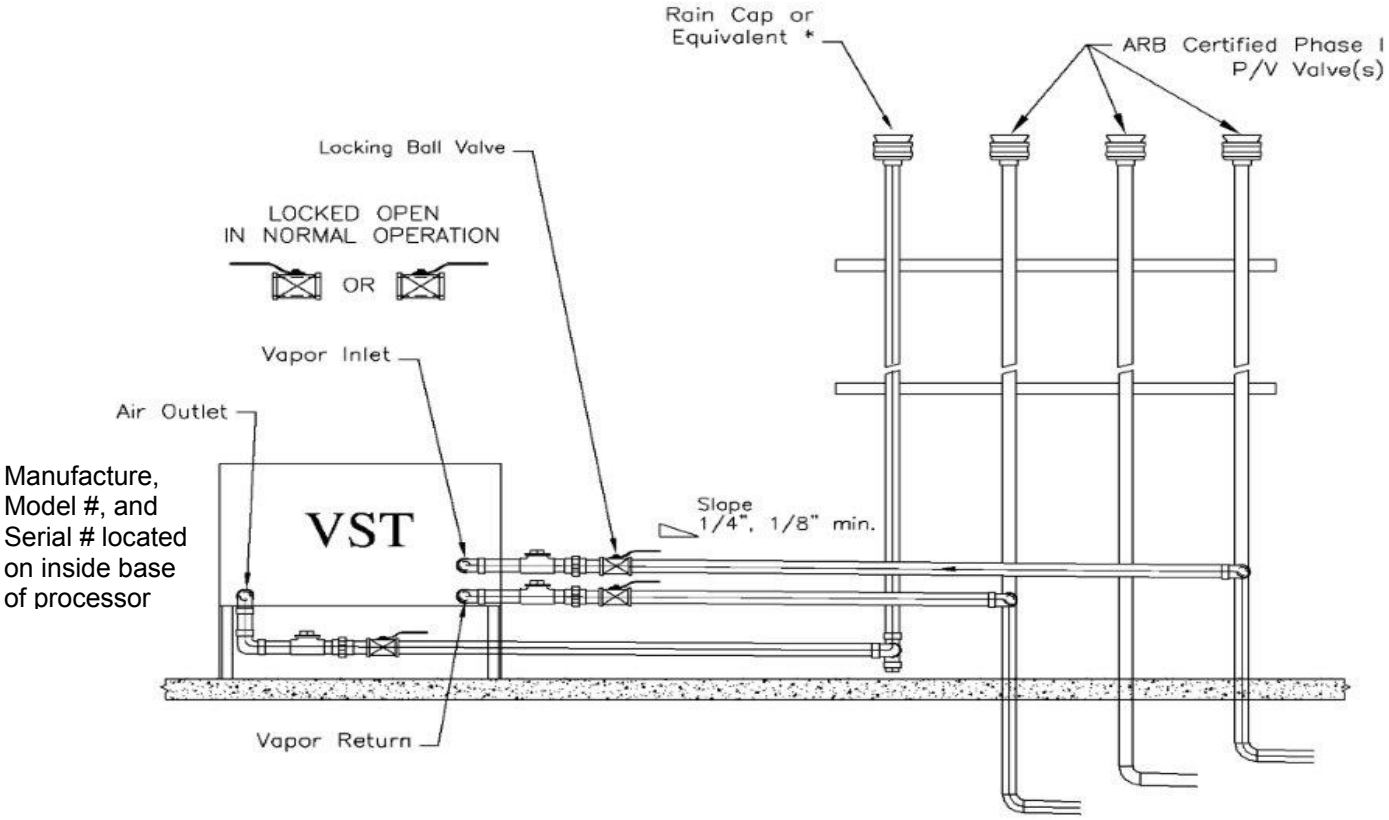

CAUTION: THE HANDLES ON THE LOCKING BALL VALVES MUST NOT BE REMOVED

* If a P/V valve is used, the internal components MUST be removed to allow open venting to the atmosphere.

Figure 2B-3
Typical Veeder-Root Vapor Polisher

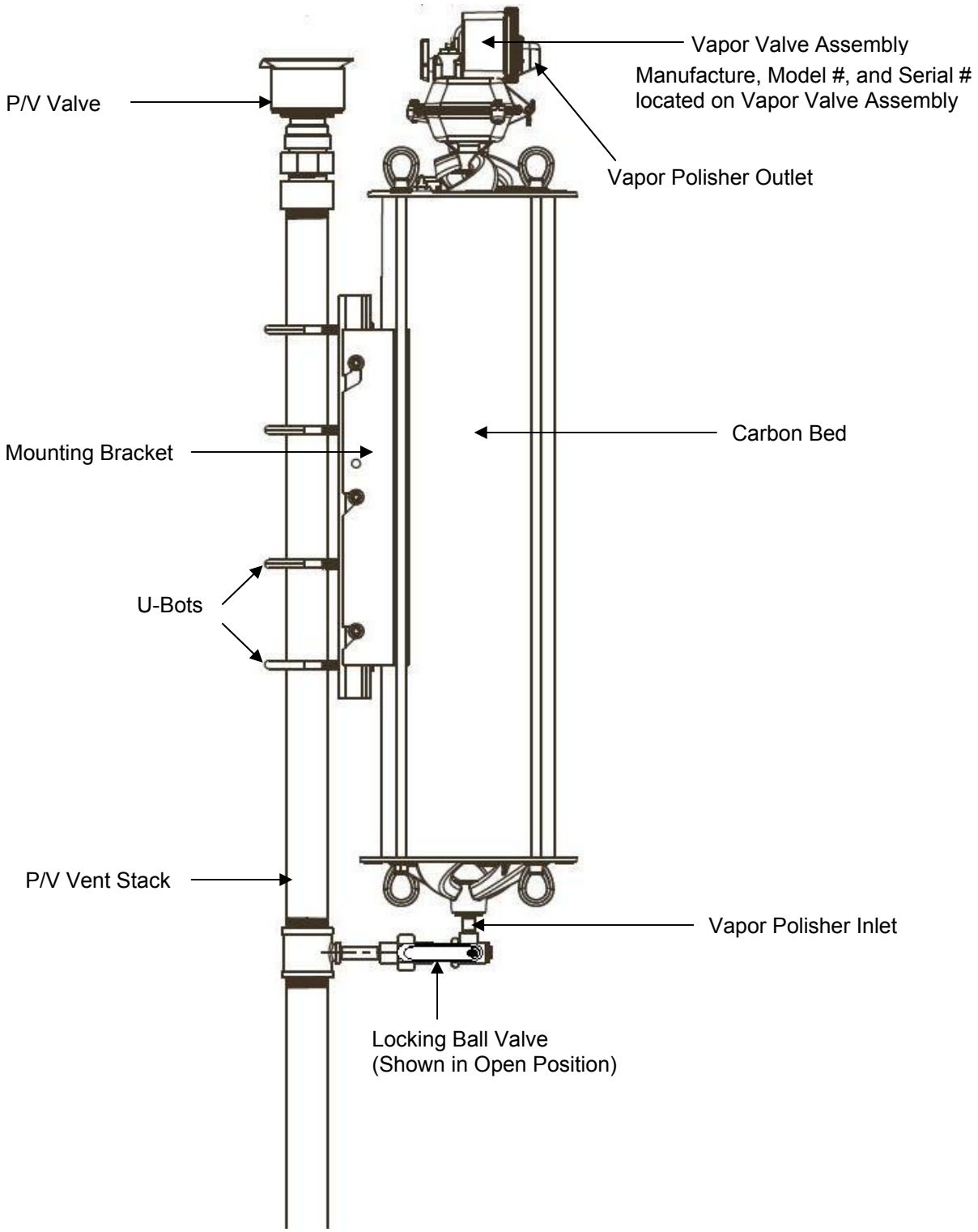

Figure 2B-4
Finding Veeder-Root ISD Version Number

Use the TLS Console <FUNCTION> key to find the ISD Daily Report menu:

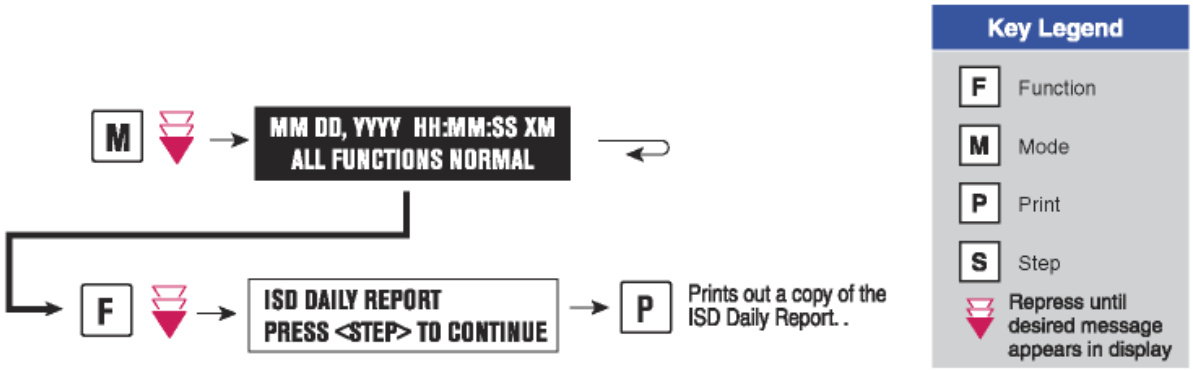

The ISD version number can be verified on the TLS Console LCD screen using the <STEP> key or by using the TLS Console <PRINT> key to print and review the latest ISD Daily Report:

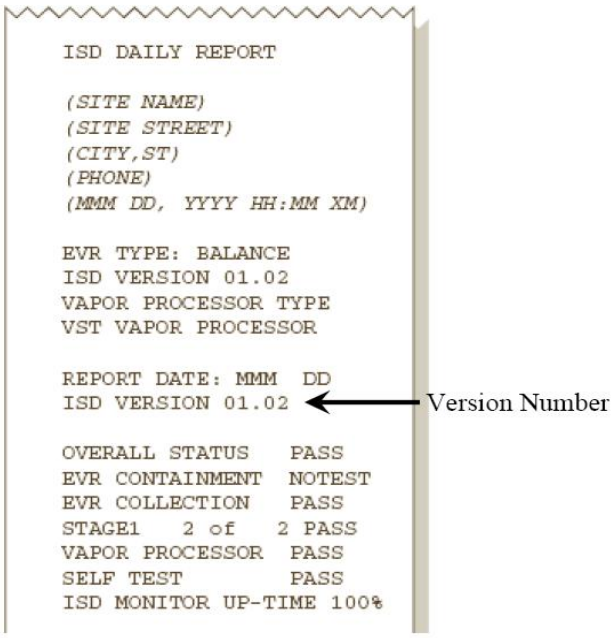

Presence of the ISD Daily Report menu and correct ISD software version number is evidence that ISD is installed and activated in the TLS Console.

Figure 2B-5
Standard TLS Console

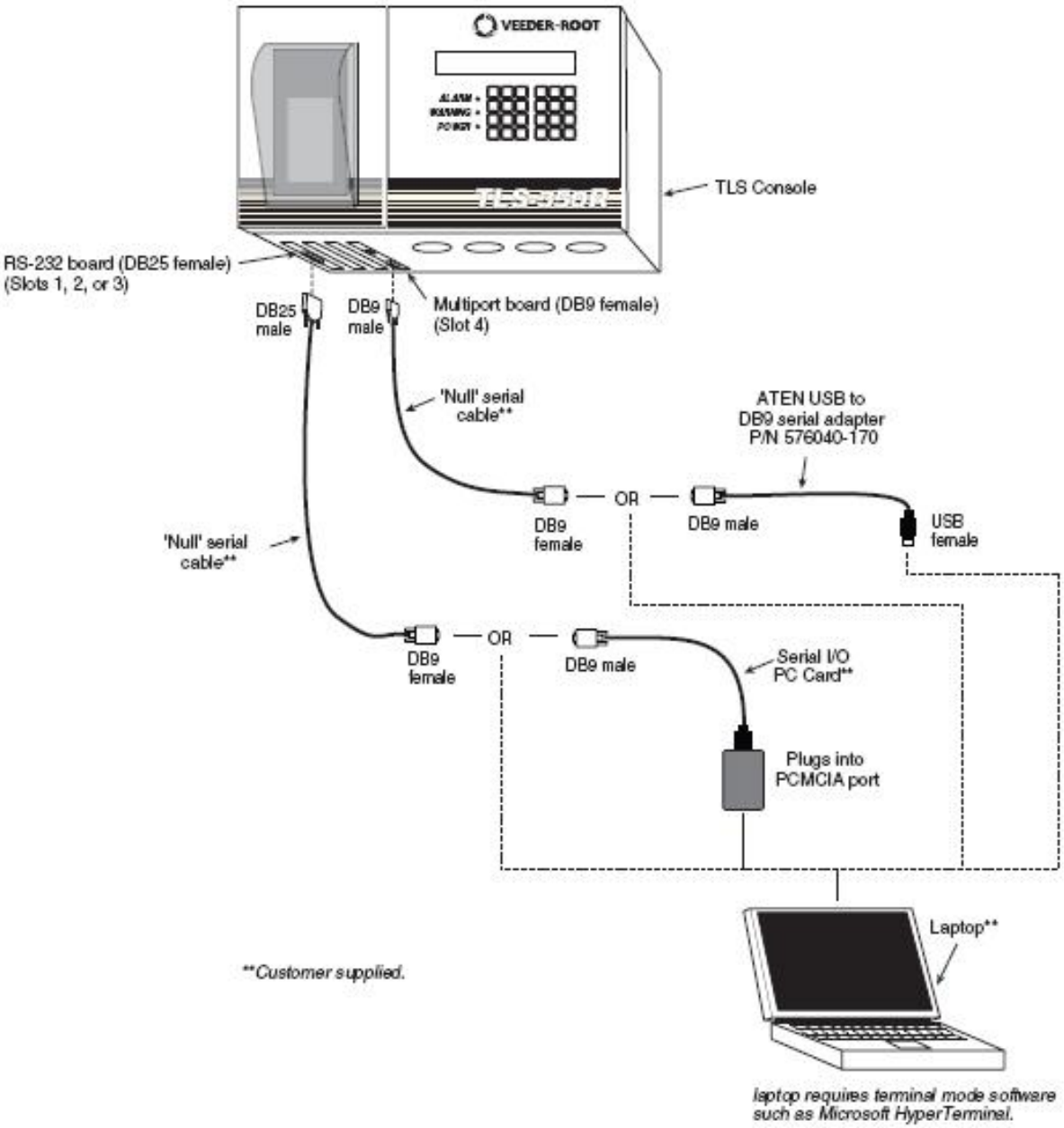

Figure 2B-6
Veeder-Root 332374-XXX
Vapor Flow Meter

Figure 2B-7
Veeder-Root 331946-001
Vapor Pressure Sensor

Figure 2B-8
Veeder-Root DIM Series
Dispenser Interface Module (DIM)

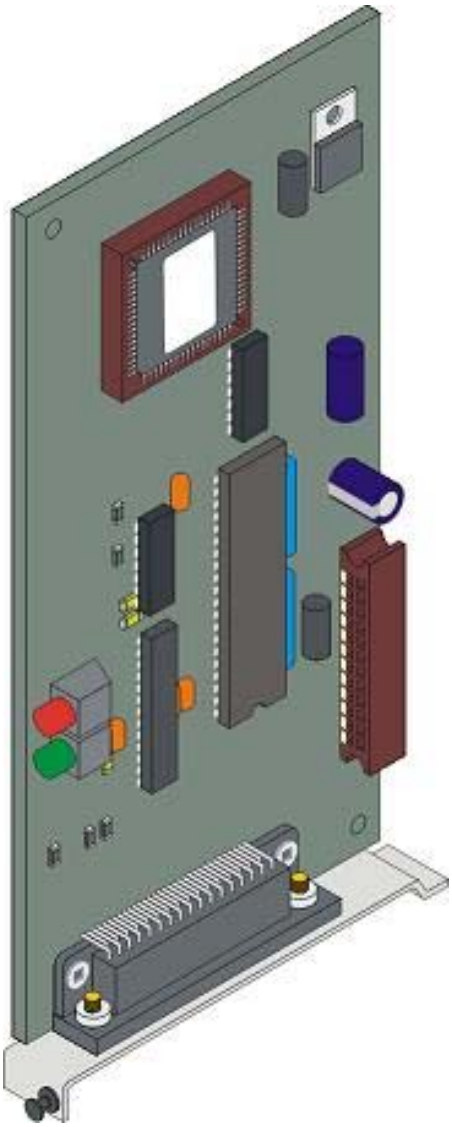

Figure 2B-9
Tank Inventory Probe Sensor

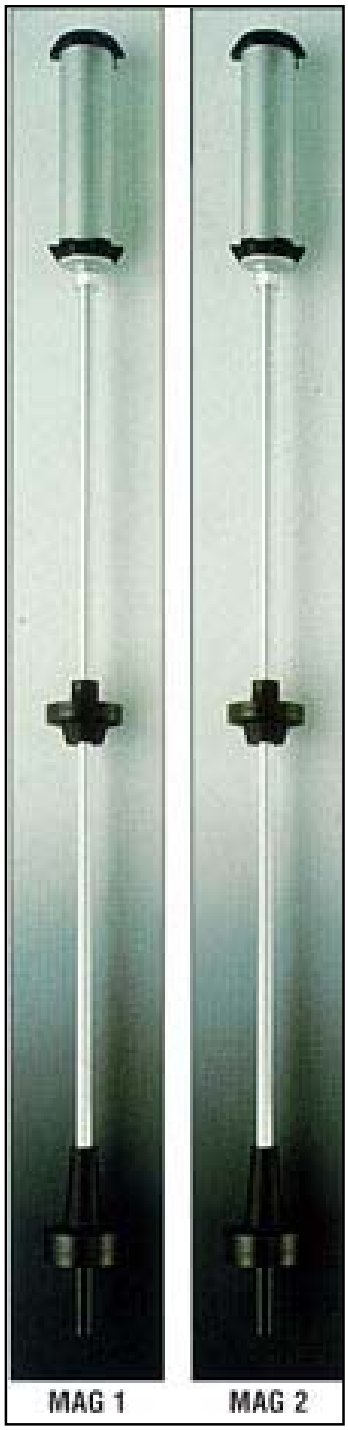

Figure 2B-10
Typical Installation of the Veeder-Root Vapor Pressure Sensor & Vapor Flow Sensor

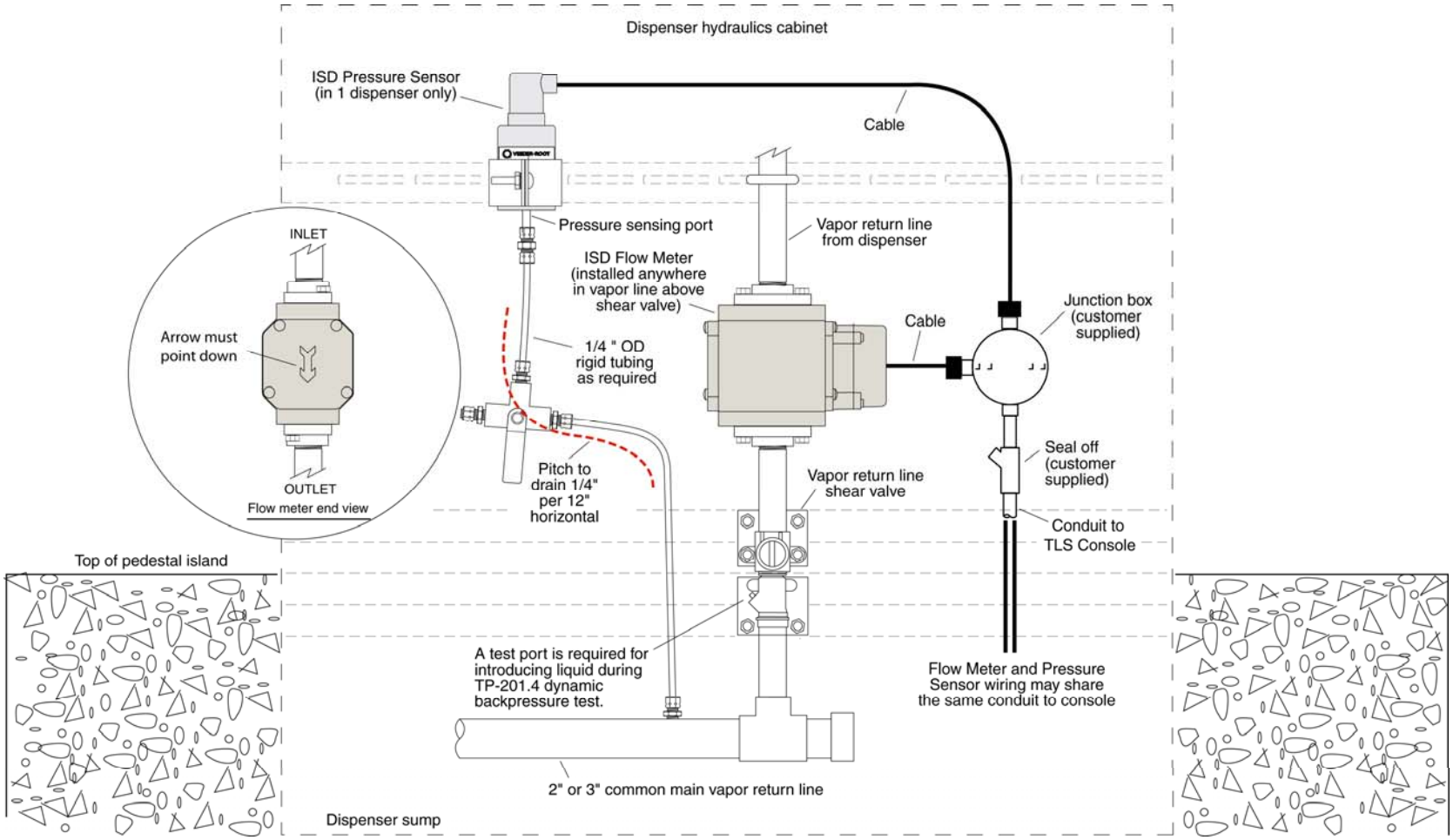

Figure 2B-11
Typical Installation of the Veeder-Root Vapor Pressure Sensor and Vapor Flow Sensor

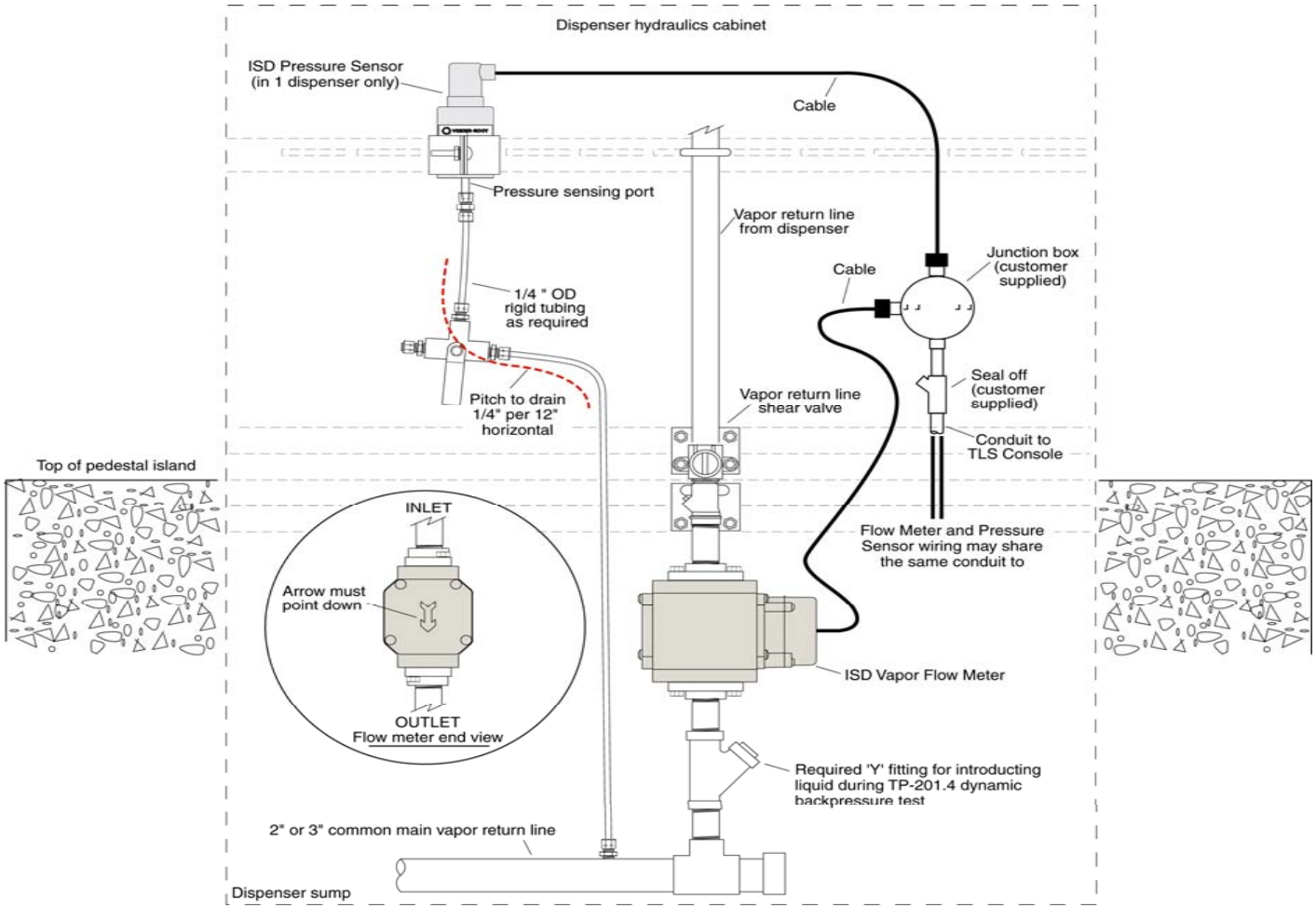

Figure 2B-12
Typical Installation of the Veeder-Root Vapor Pressure Sensor on a vapor vent stack

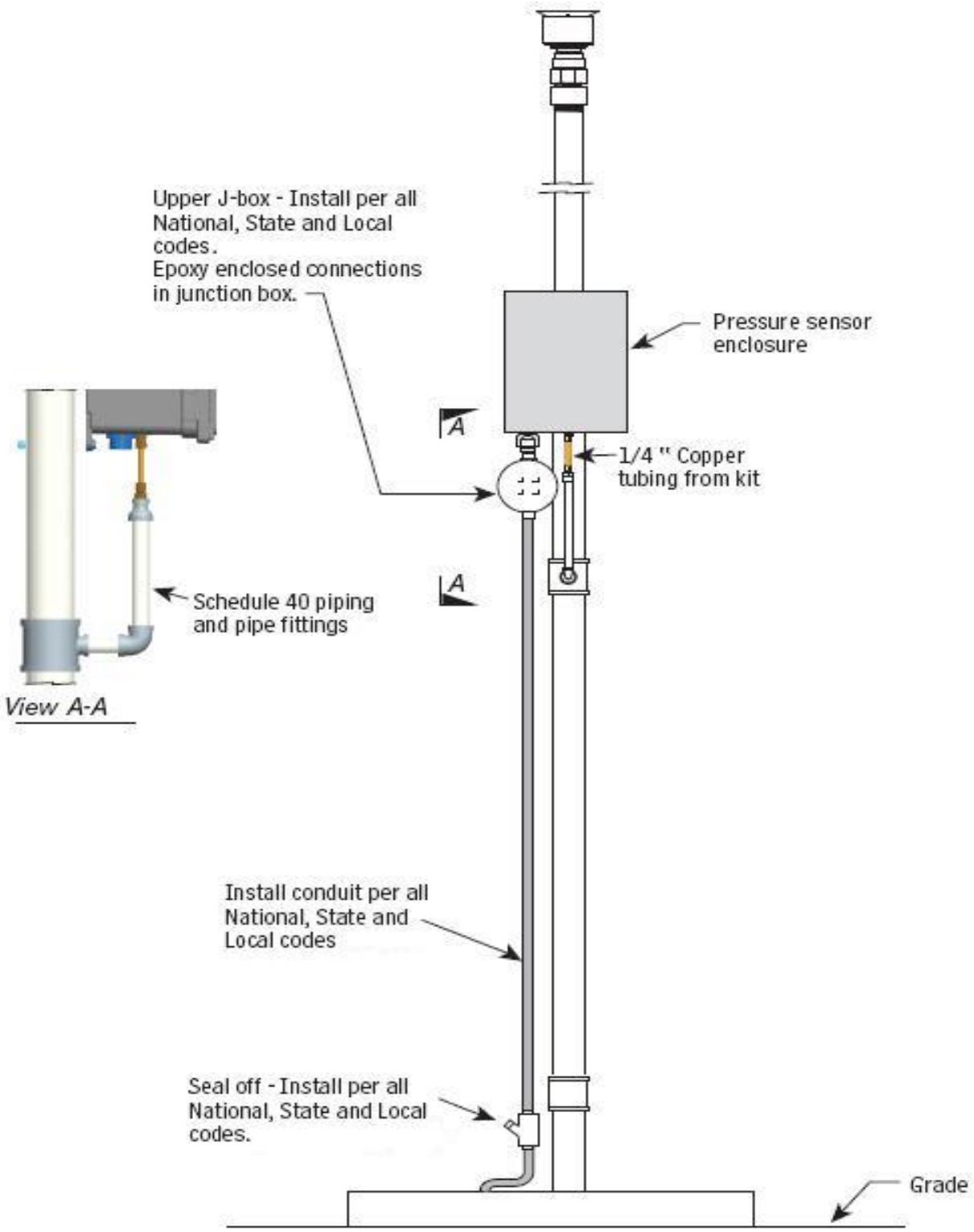

Figure 2B-13
Example of a GDF Maintenance and Alarm History Record

Date of Maintenance/ Test/Inspection/Failure/ alarm history (including date and time of maintenance call)	Repair Date To Correct Test Failure	Maintenance/Test/Inspection Performed and Outcome/Action Taken in Response to Alarm	Affiliation	Name and Technician ID Number of Individual Conducting Maintenance or Test	Telephone Number