# EXHIBIT 1[1]

## Equipment List
## Hanging Hardware

| *Component* | *Manufacturer / Model* |
|---|---|
| **Nozzle** | VST Model VST-EVR-NB, VST-EVR-NB (Rebuilt)<br>Or<br>VST Model VST-EVR-NB (G2), VST-EVR-NB (G2 Rebuilt)<br>Or EMCO Models A4005EVR, RA4005EVR (Rebuilt)<br>(Figure 1A-1) |
| **Coaxial Curb Hose** | VST Model VDV-EVR Series<br>Or<br>Veyance Model Maxxim Premier Plus<br>*("NV" stamped on nozzle end)*<br>(Figure 1A-2) |
| **Coaxial Whip Hose** | VST Model VSTA-EVR Series<br>Or<br>Veyance Model Maxxim Premier Plus<br>(Figure 1A-2) |
| **Breakaway Coupling** | VST Model VSTA-EVR-SBK, VSTA-EVR-SBK (Reattachable)[2]<br>Or<br>EMCO Model A4119EVR<br>Or<br>OPW Model 66CLP<br>(Figure 1A-2) |

### Allowable Hanging Hardware Combinations Including ISD Systems

| | Nozzle | | Hose | | Breakaway | | | ISD | |
|---|---|---|---|---|---|---|---|---|---|
| Processor | VST | EMCO | VST | Goodyear | VST | EMCO | OPW | Veeder-Root | INCON |
| VST Membrane | ● | | ● | ● | ● | ● | ● | ● | |
| Veeder Root Vapor Polisher | ● | ● | ● | ● | ● | ● | ● | ● | |
| FFS Clean Air Separator | ● | ●[3] | ● | ● | ● | ● | ● | ● | ●[3] |
| Hirt VCS 100 | ● | ● | ● | ● | ● | ● | ● | ● | |
| VST Green Machine | ● | | ● | ● | ● | ● | ● | ● | |

[1] The local air district may require a permit application when changing between alternate components.
[2] The lower half of the VST reattachable breakaway, identified with a VST logo, cannot be used on the VST non-reattachable or rebuilt breakaways (previously certified by Executive Orders VR-204-A to O).
[3] EMCO Nozzle for use with FFS Clean Air Separator is not allowed with INCON ISD System.

***ONLY ONE OF THE FOLLOWING <u>FIVE (5)</u> PROCESSOR GROUPS IS REQUIRED***

**VST Membrane**
**Processor Equipment List #1**

| *Component* | *Manufacturer / Model* |
|---|---|
| **Veeder-Root TLS-350 Series, including but not limited to TLS-350, TLS-350 Plus, TLS-350R, Red Jacket ProMax, Gilbarco EMC consoles (TLS Console)** | Veeder-Root 8482XX-XXX, 8470XX-XXX,<br>ProMax 847097-XXX<br>EMC PAO2620X000X<br>X = Any digit<br>(Figure 1A-3A) |
| **RS232 Interface Module** | Veeder-Root RS232 Interface Module Series<br>(Figure 1A-3B) |
| **VST Membrane Processor** | VST Model VST-ECS-CS3-XXX<br>(Figure 1A-4) where XXX represents motor phase and HC Sensor<br>110 =Single-Phase with HC Sensor<br>310=Three-Phase with HC Sensor |
| **Pressure Management Control (PMC) Software Version Number** | 1.04 |
| **Vapor Pressure Sensor [1]<br>(1 per GDF)** | Veeder-Root 331946-001 – Wired, approved for installation in the dispenser or on the vent stack<br>(Figure 1A-5)<br>or<br>Veeder Root 861190-201 - Low Powered Wireless, approved for installation on the vent stack only<br>(Figure 1A-5) |
| **Vapor Pressure Sensor Desiccant Tube - Optional<br>(1 per GDF)** | Veeder-Root 330020-717 – Dryer Tube<br>(Figure 1A-5) |
| **Multiport Card** | Veeder-Root 330586-018 |
| **Universal Enclosure Kit [2]** | Veeder-Root 330020-716<br>(Figure 1A-9) |

[1] Wireless sensors require additional components specified in Veeder-Root Optional Wireless Component Equipment List.
[2] Required for vapor pressure sensors installed on the vent line (wired or wireless).

**Veeder-Root Vapor Polisher**
**Processor Equipment List #2**

| *Component* | *Manufacturer / Model* |
|---|---|
| **Veeder-Root TLS-350 Series, including but not limited to TLS-350, TLS-350 Plus, TLS-350R, Red Jacket ProMax, Gilbarco EMC consoles (TLS Console)** | Veeder-Root 8482XX-XXX, 8470XX-XXX,<br>Promax 847097-XXX<br>EMC PAO2620X000X<br>X = Any digit<br>(Figure 1A-3A) |
| **RS232 Interface Module** | Veeder-Root RS232 Interface Module Series<br>(Figure 1A-3B) |
| **Veeder-Root Vapor Polisher** [1] | Veeder Root Vapor Polisher 332761-002 (Figure 1A-6) - Wired or Wireless |
| **PMC Software Version Number** | 1.04 |
| **Vapor Pressure Sensor** [1]<br>**(1 per GDF)** | Veeder-Root 331946-001 – Wired, approved for installation in the dispenser or on the vent stack<br>(Figure 1A-5)<br>or<br>Veeder Root 861190-201 - Low Powered Wireless, approved for installation on the vent stack only<br>(Figure 1A-5) |
| **Vapor Pressure Sensor Desiccant Tube - Optional**<br>**(1 per GDF)** | Veeder-Root 330020-717 – Dryer Tube<br>(Figure 1A-5) |
| **Smart Sensor Interface Module**<br>**(1 per GDF)**<br>With Atmospheric Sensor | Veeder-Root 329356-004<br>(Figure 1A-7)<br>Veeder-Root 332250-001 |
| **Universal Enclosure Kit** [2] | Veeder-Root 330020-716<br>(Figure 1A-9) |

[1] Wireless sensors require additional components specified in Veeder-Root Optional Wireless Component Equipment List.
[2] Required for the vapor valve wireless battery/transmitter and vapor pressure sensors installed on the vent line (wired or wireless).

**Franklin Fueling Systems - Healy Clean Air Separator**
**Processor Equipment List #3**

| *Component* | *Manufacturer / Model* |
|---|---|
| **Franklin Fueling Systems Clean Air Separator** | Healy Model 9961 Clean Air Separator<br>(Figures 1A-10 and 1A-11)<br>Healy Model 9961H Clean Air Separator<br>(Figures 1A-12 and 1A-13) |

**Hirt VCS 100**
**Processor Equipment List #4**

| Component | Manufacturer / Model |
|---|---|
| **Hirt Thermal Oxidizer With Indicator Panel** | Hirt Model VCS 100<br>(Figure 1A-15)<br>Leg Attachments:<br>5” – M39<br>48”- M40 |
| **Hirt 1/4" Check Valve (optional component)** | Hirt P65 |

**VST Green Machine**
**Processor Equipment List #5**

| Component | Manufacturer / Model |
|---|---|
| **Veeder-Root TLS-350 Series, including but not limited to TLS-350, TLS-350 Plus, TLS-350R, Red Jacket ProMax, Gilbarco EMC consoles (TLS Console)** | Veeder-Root 8482XX-XXX, 8470XX-XXX,<br>Promax 847097-XXX<br>EMC PAO2620X000X<br>X = Any digit<br>(Figure 1A-3A) |
| **RS232 Interface Module** | Veeder-Root RS232 Interface Module Series<br>(Figure 1A-3B) |
| **Green Machine Processor, including controller** | VST Model VST-GM-CS1-100<br>(Figure 1A-22) |
| **Pressure Management Control (PMC) Software Version Number** | 1.04 |
| **Vapor Pressure Sensor[1]**<br>**(1 per GDF)** | Veeder-Root 331946-001 – Wired, approved for installation in the dispenser or on the vent stack (Figure 1A-5)<br>or<br>Veeder Root 861190-201 - Low Powered Wireless, approved for installation on the vent stack only (Figure 1A-5) |
| **Vapor Pressure Sensor Desiccant Tube - Optional**<br>**(1 per GDF)** | Veeder-Root 330020-717 – Dryer Tube<br>(Figure 1A-5) |
| **Multiport Card** | Veeder-Root 330586-018 |
| **Universal Enclosure Kit [2]** | Veeder-Root 330020-716<br>(Figure 1A-9) |

[1] Wireless sensors require additional components specified in Veeder-Root Optional Wireless Component Equipment List.
[2] Required for vapor pressure sensors installed on the vent line (wired or wireless).

**Liquid Condensate Trap**
**Equipment List**

| Component | Manufacturer / Model |
|---|---|
| **Riser Adapter** | INCON model TSP-K2A<br>(Figure 1A-14) |
| **In-Line Filter** | 140 micron, Swagelok B-4F2-140 or SS-4F2-140, or equivalent<br>(Figure 1A-14) |
| **Screen** | Aluminum Insect screen (18X14 mesh), or<br>Stainless Steel Insect screen (18X18 mesh).<br>(Figure 1A-14) |
| **Stainless Steel Hose Clamp** | Sized to secure screen to suction tube.<br>(Figure 1A-14) |
| **Liquid Sensor**[1] | Must have an audible and visual alarm<br>(Figure 1A-14) |
| **Liquid Condensate Trap**[1] | Any capacity, manufacturer, make and model<br>(Figure 1A-14) |

[1] Must meet applicable State Water Resources Control Board requirements (e.g. LG 113, LG 167 and LG 169) and any local authority having jurisdiction which includes the Certified Unified Program Agency (CUPA).

***ONLY ONE OF THE FOLLOWING TWO (2) ISD SYSTEM GROUPS IS REQUIRED***

**Veeder-Root ISD System**
**Equipment List #1**

| Component | Manufacturer / Model |
|---|---|
| **Veeder-Root TLS-350 Series, including but not limited to TLS-350, TLS-350 Plus, TLS-350R, Red Jacket ProMax, Gilbarco EMC consoles (TLS Console)** | Veeder-Root 8482XX-XXX, 8470XX-XXX,<br>Promax 847097-XXX<br>EMC PAO2620X000X<br>X = Any digit<br>(Figure 1A-3A) |
| **Balance Low Pressure Drop Vapor Flow Meter** [1]<br>(1 per Dispenser) | Veeder-Root 332374-XXX - Wired or Wireless<br>(Figure 1A-8)<br>X = Any digit |
| **Vapor Pressure Sensor** [1]<br>(1 per GDF) | Veeder-Root 331946-001 –Wired, approved for installation in the dispenser or on the vent stack<br>(Figure 1A-5)<br>or<br>Veeder Root 861190-201 - Low Powered Wireless, approved for installation on the vent stack only<br>(Figure 1A-5) |
| **Vapor Pressure Sensor Desiccant Tube - Optional (1 per GDF)** | Veeder-Root 330020-717 – Dryer Tube<br>(Figure 1A-5) |
| **Smart Sensor Interface Module (1 per GDF)** | Veeder Root 329356-004, 332250-001<br>(Figure 1A-7) |
| **RS232 Interface Module** | Veeder-Root RS232 Interface Module Series<br>(Figure 1A-3B) |
| **ISD Software Version Number**[2] | Veeder-Root 1.05 |
| **Universal Enclosure Kit** [3] | Veeder-Root 330020-716<br>(Figure 1A-9) |
| **Dispenser Interface Module** | Veeder-Root DIM Series |

[1] Wireless sensors require additional components specified in Veeder-Root Optional Wireless Component Equipment List.
[2] For new installations ISD software version 1.05 is compatible with all processors listed in this EO. For existing installations, refer to the Veeder-Root ISD software version compatibility matrix listed in this Exhibit.
[3] Only required for vapor pressure sensors installed on the vent line.

**Veeder-Root**
**Optional Wireless Component Equipment List**

| Component | Manufacturer / Model |
|---|---|
| **TLS RF Console-2 Box**<br>(1 per GDF) | Veeder-Root 332242-002<br>(Figure 1A-9) |
| **RF Transmitter-2**[1]<br>(1 per Veeder-Root Sensor including Vapor Pressure Sensor, Low Pressure Drop Vapor Flow Meter, and Vapor Polisher Processor) | Veeder-Root 332235-016<br>(Figure 1A-9) |
| **RF Transmitter Battery Pack**[1]<br>**(**1 per Transmitter) | Veeder-Root 332425-011<br>(Figure 1A-9) |
| **RF Repeater-2**<br>(1 per GDF) | Veeder-Root 332440-030<br>(Figure 1A-9) |
| **RF Receiver-2**<br>(1 per GDF) | Veeder-Root 332440-029<br>(Figure 1A-9) |

[1]The RF Transmitter-2 and the RF Transmitter Battery Pack for the wireless vapor valve and wireless pressure sensor must be installed in the Universal Enclosure Kit.

**Veeder-Root**
**Optional Maintenance Tracker Security Feature**

| Component | Manufacturer/Model |
|---|---|
| **Maintenance Tracker Kit** | Veeder-Root 330020-546<br><br>Consists of the following components:<br>• Technician Key (Figure 1A-16)<br>• Interface Module RS232/485 Dual Module with DB9 Converter or Single Port Module with DB 25 converter (Figure 1A-17)<br>• Manual |

**INCON ISD System**
**Equipment List #2**

| *Component* | *Manufacturer/Model* |
|---|---|
| **ISD Console**<br>**TS-EMS**<br>**TS-550**<br>**TS-5000** | INCON / TEMSXXXX/YV<br>INCON / T550XXXX/YYYYV<br>INCON / T5000XXXX/YYYYV<br>Where:<br>X represents hardware option<br>(Example: X can be: 'D' for Display, 'P' for Printer)<br>Y represents software option<br>(Example: Y can be: 'S' for Secondary Containment Monitoring or T Tank Testing)<br>V represents Vapor Recovery Monitoring Application (Figure 1A-18)<br><br>Note: 1. All consoles come standard with RS-232 (COMM1) and Ethernet ports for data access. |
| **ISD Vapor Recovery Monitoring (VRM) Software** | INCON / TS-VRM Version 1.3.0<br><br>Note: INCON/TS-VRM software version 1.3.0 is approved for and shall be used or installed only with uni-hose dispensers. |
| **ISD Vapor Flow Meter**<br>(1 per Dispenser) | INCON TS-VFM<br>(Figure 1A-19) |
| **ISD Vapor Pressure Sensor**<br>(1 per GDF) | INCON TS-VPS<br>(Figure 1A-20) |
| **Data Transfer Unit (Optional)**<br>**(1 per dispenser and**<br>**1 per GDF)** | INCON TS-DTU / P<br>(Figure 1A-21)<br><br>Note: Optional installation method for the replacement of dedicated wires to VFM and VPS. Refer to the IOM for more information. |
| **Dispenser Retrofit Kit**<br>**(Optional)**<br>(1 per dispenser with DTU) | INCON TS-DRK/x<br>Where X represents Type of Installation Kit<br><br>W, Wayne Installation Kit<br>E, Gilbarco Encore Installation Kit<br>A, Gilbarco Advantage Installation Kit<br>T, Tokheim Installation Kit |

**Veeder-Root ISD**
**Software Version Compatibility Matrix**

| Software Version* | Processor | | | | | | Options | | |
|---|---|---|---|---|---|---|---|---|---|
| | VST | | Veeder- Root Vapor Polisher Standard Capacity | Veeder- Root Vapor Polisher Extended Capacity | Healy CAS | Hirt VCS 100 | Dispenser Shutdown*** and Collection Monitoring Update | Wireless Components | Maintenance Tracker |
| | Membrane | Green Machine | | | | | | | |
| 1.01 | ● | | | | ● | | | | ● |
| 1.02 | ● | | ● | | ● | | | | ● |
| 1.03 | ● | | ● | | ● | | ● | | ● |
| 1.04 | ● | | | ● | ● | | ● | ● | ● |
| 1.05** | ● | ● | | ● | ● | ● | ● | ● | ● |

*Software Version 1.01 has been revoked for GDF's equipped with multiproduct (six pack) dispensers with fuel blending. Subject GDFs must upgrade to higher version software (1.02, 1.03, 1.04, or 1.05) by 07/01/2012.

**For new installations ISD software version 1.05 is compatible with all processors listed in this EO. For existing installations, refer to the above software compatibility matrix.

With the exception of multiproduct (six pack) dispensers with fuel blending, software Versions 1.01, 1.02, 1.03, and 1.04 may remain in use at existing GDFs.

Software Version 1.05 must be installed at new GDFs or those undergoing a major modification as determined by date when the district issues the permit to construct.

***Dispenser shutdown can be achieved by alternate means for GDFs equipped with Software Version 1.01 and 1.02 as indicated in the ARB approved IOM for the Veeder-Root ISD System.

**Figure 1A-1**
**VST Model VST-EVR- NB Nozzle**

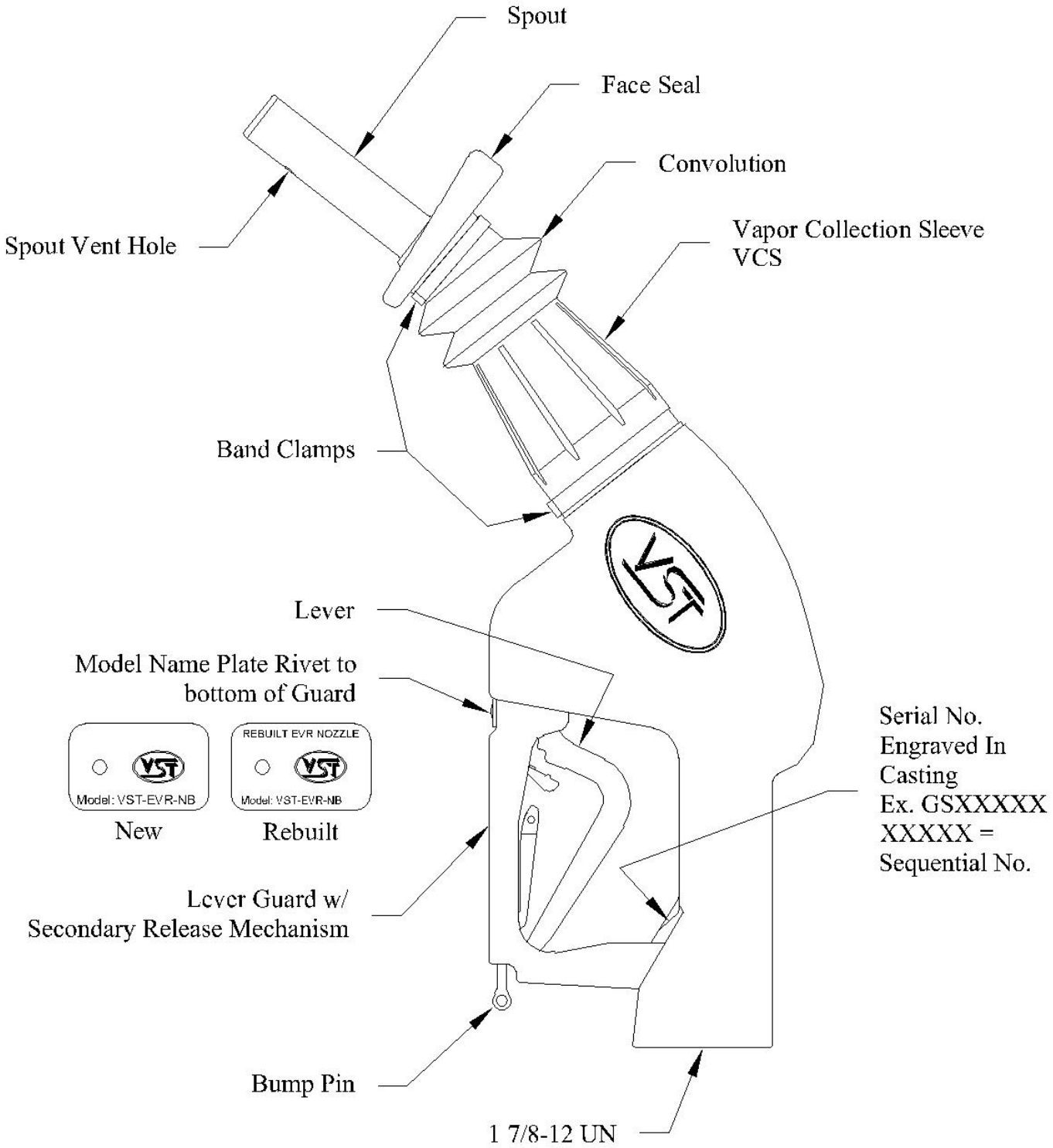

**Figure 1A-1 (continued)**
**VST Model VST-EVR-NB (G2) Nozzle**

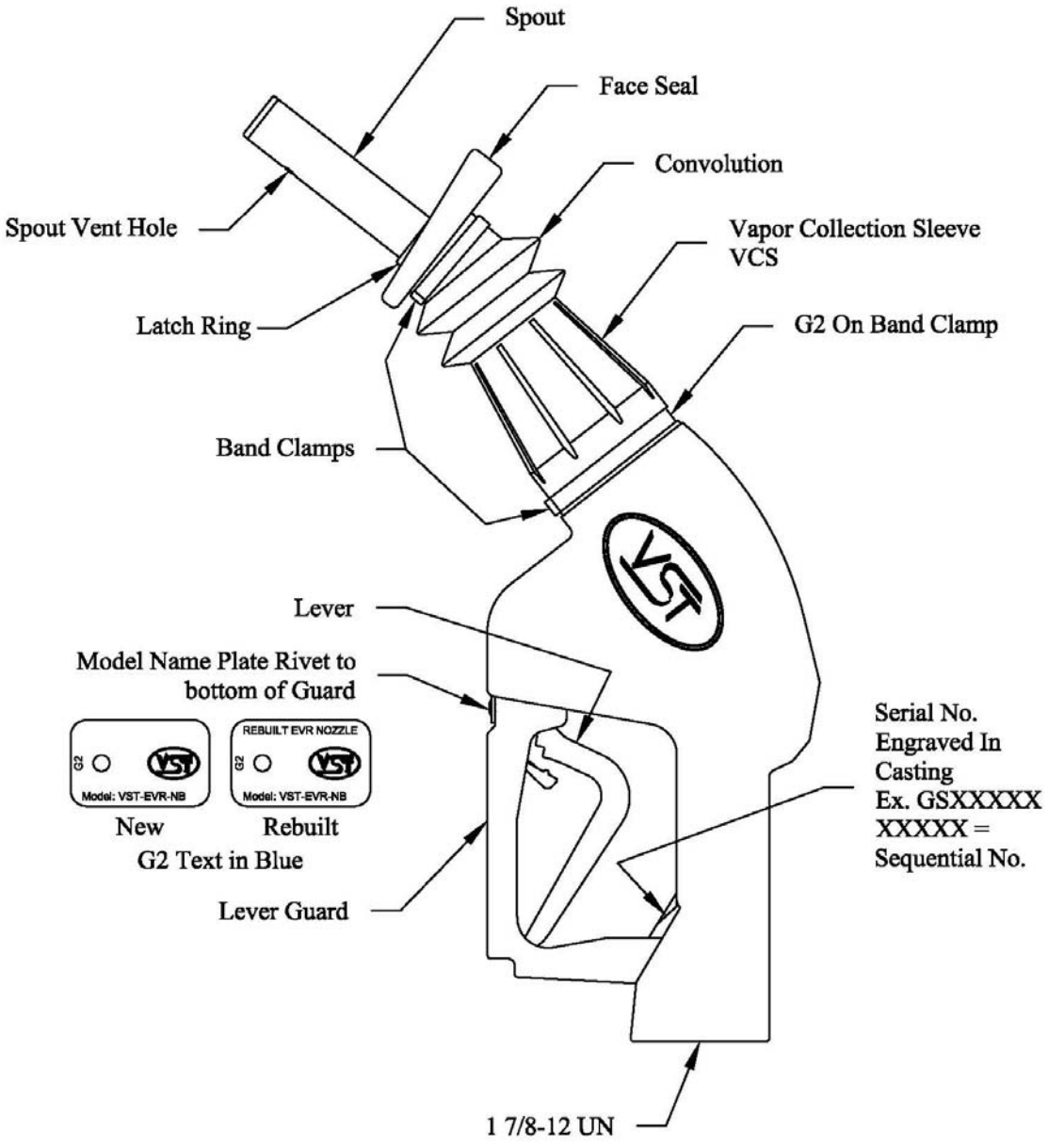

**Figure 1A-1 (continued)**
**EMCO Model A4005EVR Nozzle**

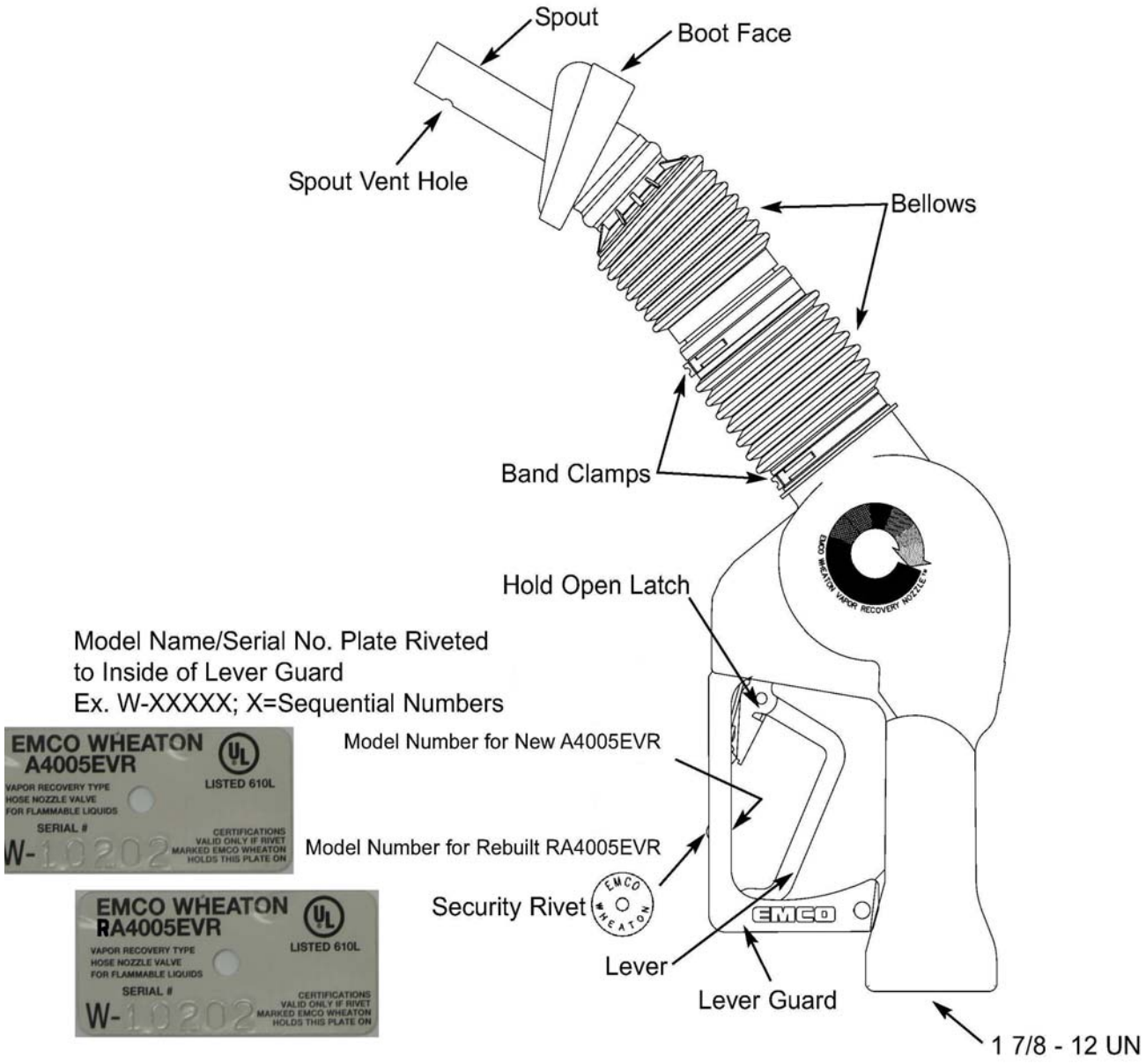

**Figure 1A-2**
**Hanging Hardware**
(Nozzle, Coaxial Curb Hose, Breakaway, and Coaxial Whip Hose)

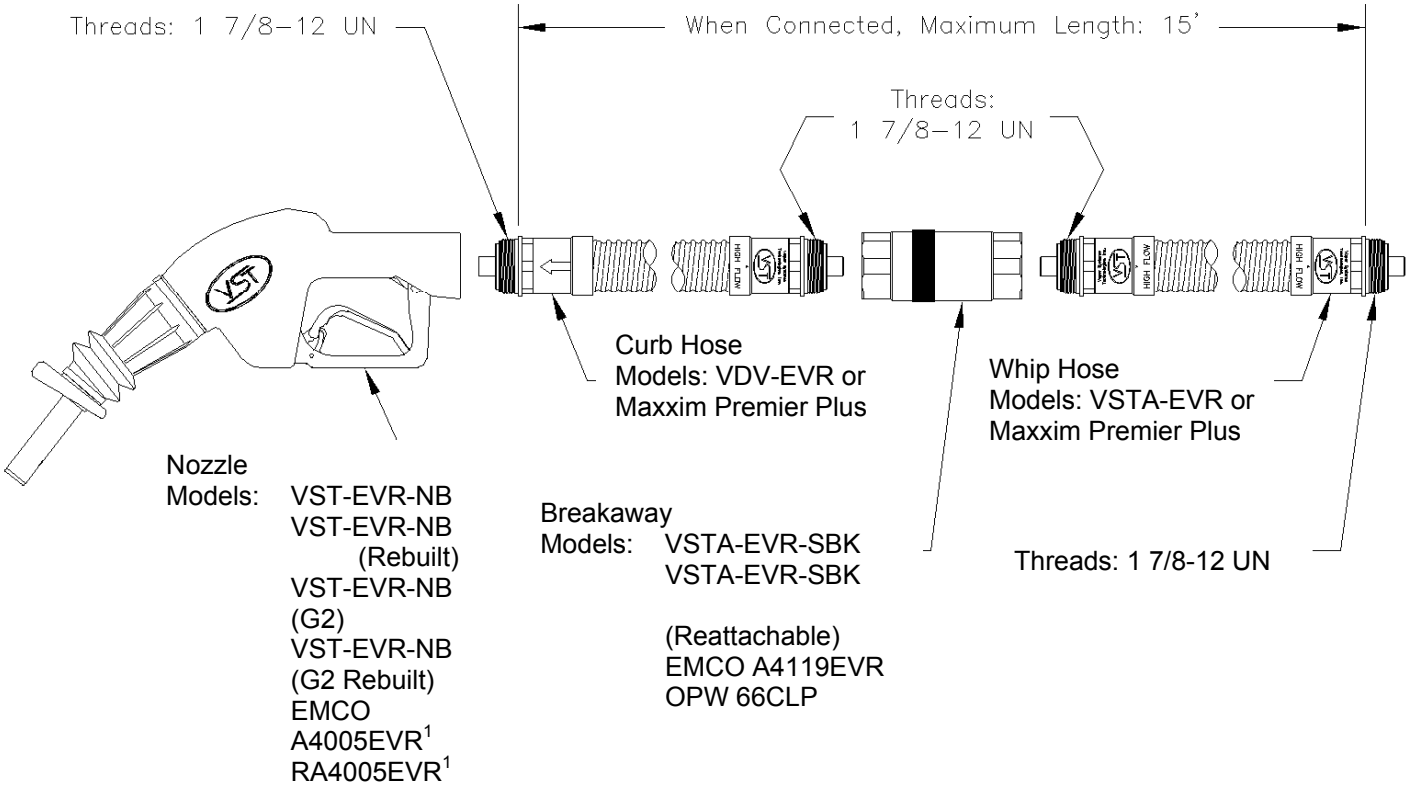


[1] Alternate component for use with the Veeder-Root Vapor Polisher or Hirt Thermal Oxidizer processors or Clean Air Separator

**Figure 1A-2 (continued)**
**VST Hanging Hardware**
(Nozzle)

Vapor Systems Technologies, Inc.

Nozzle
VST Model VST-EVR-NB,
VST Model VST-EVR-NB (Rebuilt)

Vapor Systems Technologies, Inc.

VST Model VST-EVR-NB (G2),
VST Model VST-EVR-NB
(G2 Rebuilt)

**Figure 1A-2 (continued)**
**VST Hanging Hardware**
(Breakaway)

**Figure 1A-2 (continued)**
**VST Hanging Hardware**
(Coaxial Curb Hose and Coaxial Whip Hose)

**Figure 1A-2 (continued)**
**EMCO Hanging Hardware**
(Nozzle and Safe Break Valve)

EMCO Wheaton Retail

Nozzle
EMCO Model A4005EVR

EMCO Wheaton Retail

Safe Break Valve
EMCO Model A4119EVR

**Figure 1A-2 (continued)**
**OPW Hanging Hardware**
(Breakaway)

**Figure 1A-2 (continued)**
**Veyance Technologies Inc. Hanging Hardware**
(Curb and Whip Hoses)

**Coaxial Whip Hose Model: Maxxim Premier Plus**

**Coaxial Curb Hose Model: Maxxim Premier Plus**

Serial Number Location

NOTE:
6 digit serial number shown for demonstration only – actual serial number will be different

**Figure 1A-3A**
**Veeder-Root TLS Console**

**Figure 1A-3B**
**Veeder-Root RS232 Interface Module Series**

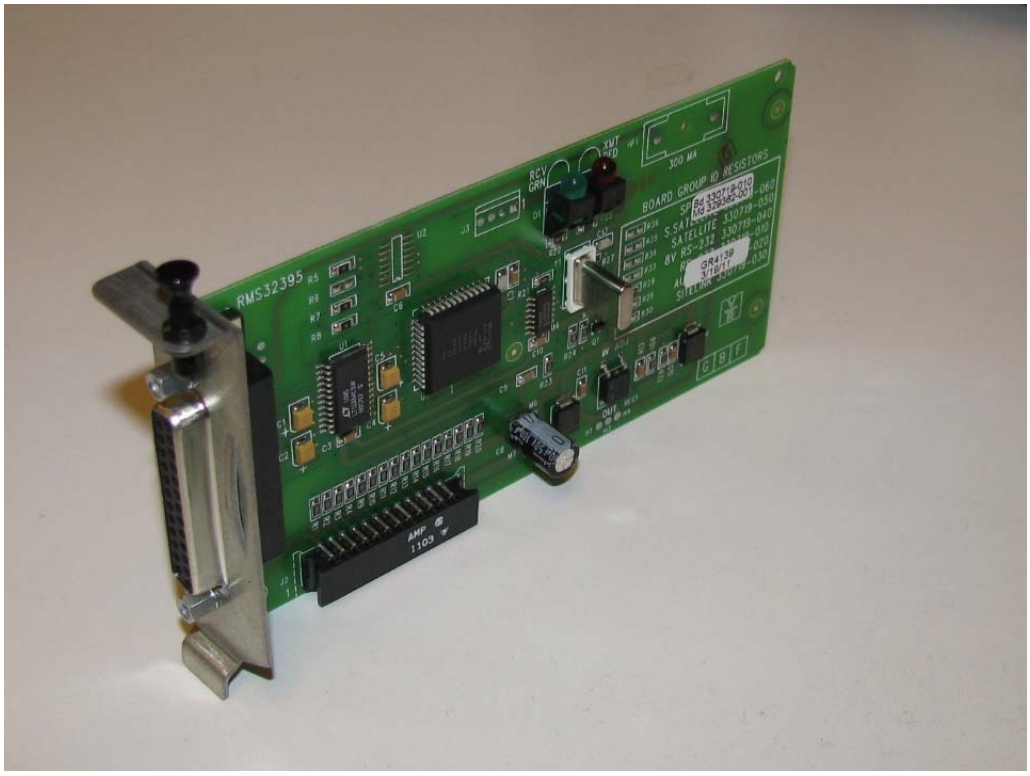

**Figure 1A-4**
**Typical VST-ECS-CS3 Membrane Processor**

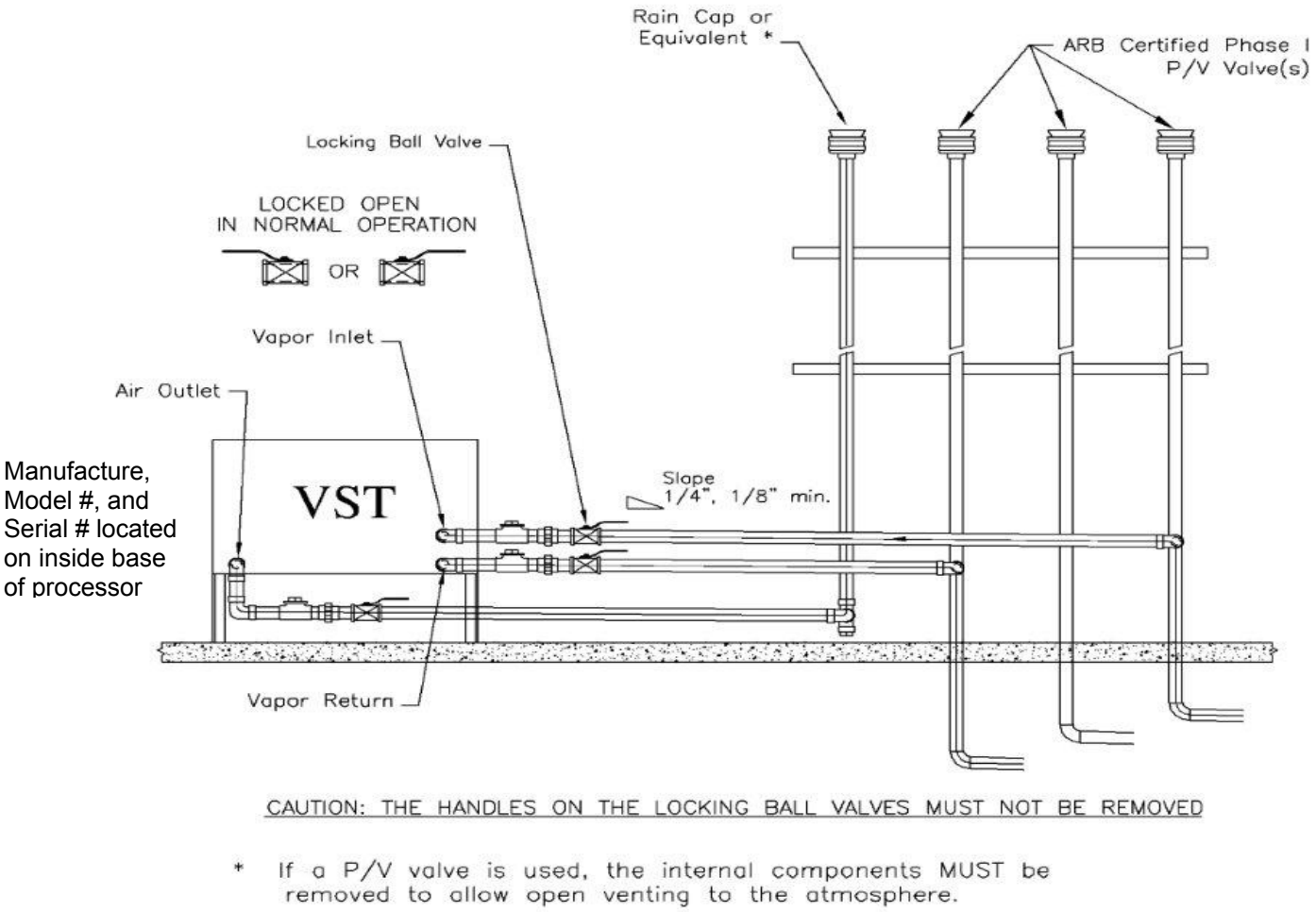

**Figure 1A-5**
**Veeder-Root Vapor Pressure Sensors**

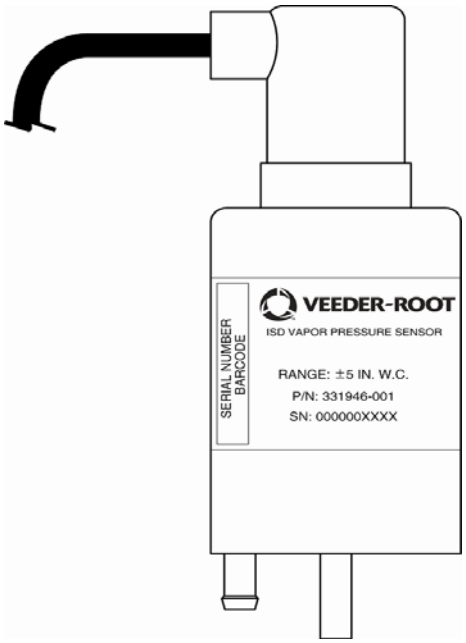


Veeder-Root Model # 331946-001
Wired Vapor Pressure Sensor

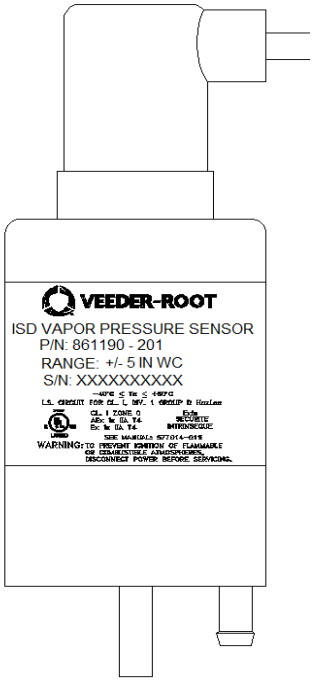


Veeder-Root Model # 861190-201
Low Powered Wireless Vapor Pressure Sensor

Veeder-Root Model # 330020-717
Dryer Tube (Optional)

**Figure 1A-6**
**Typical Veeder-Root Vapor Polisher**

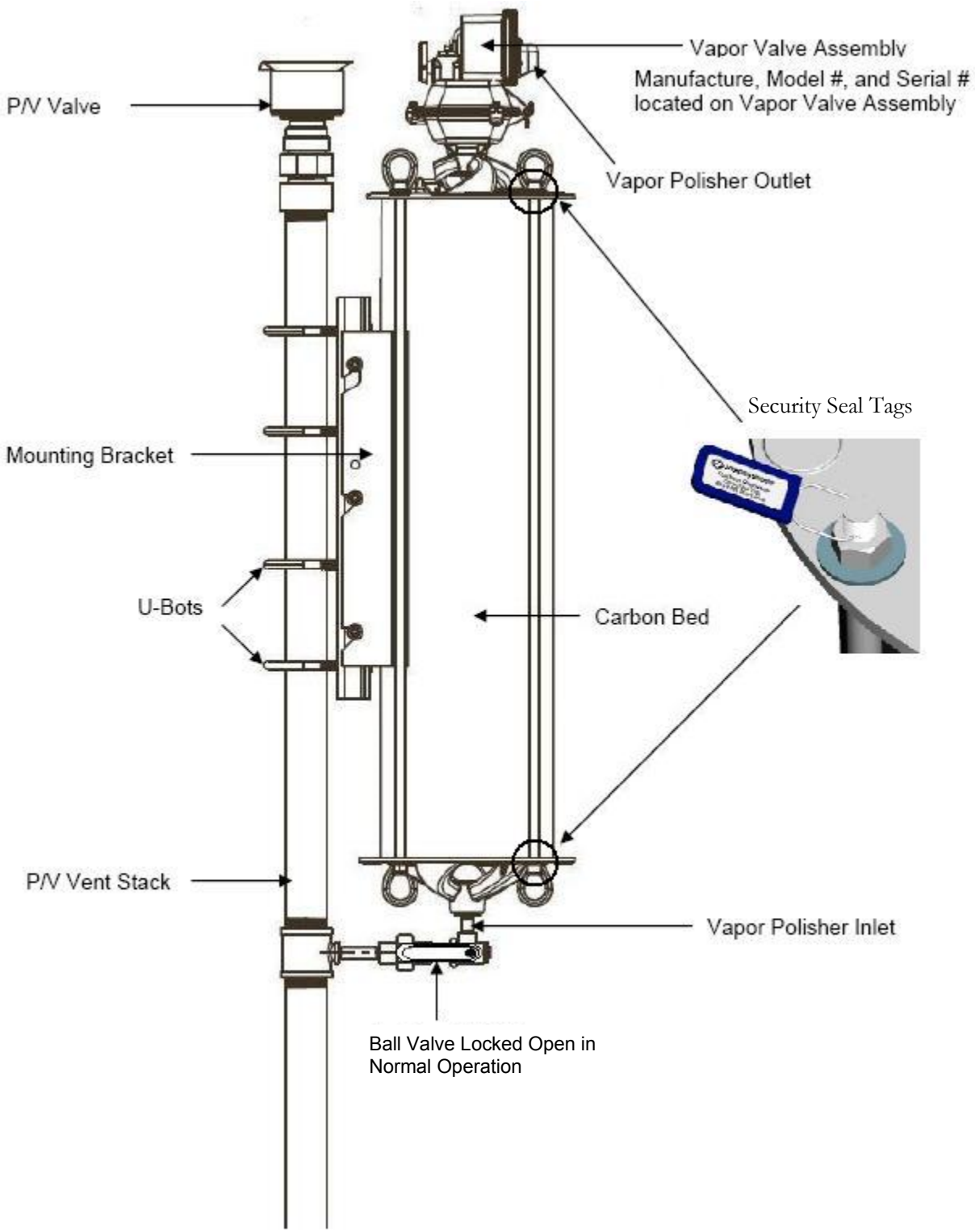

**Figure 1A-7**
**Veeder-Root 329356-004, 332250-001**
**Smart Sensor Interface Module**

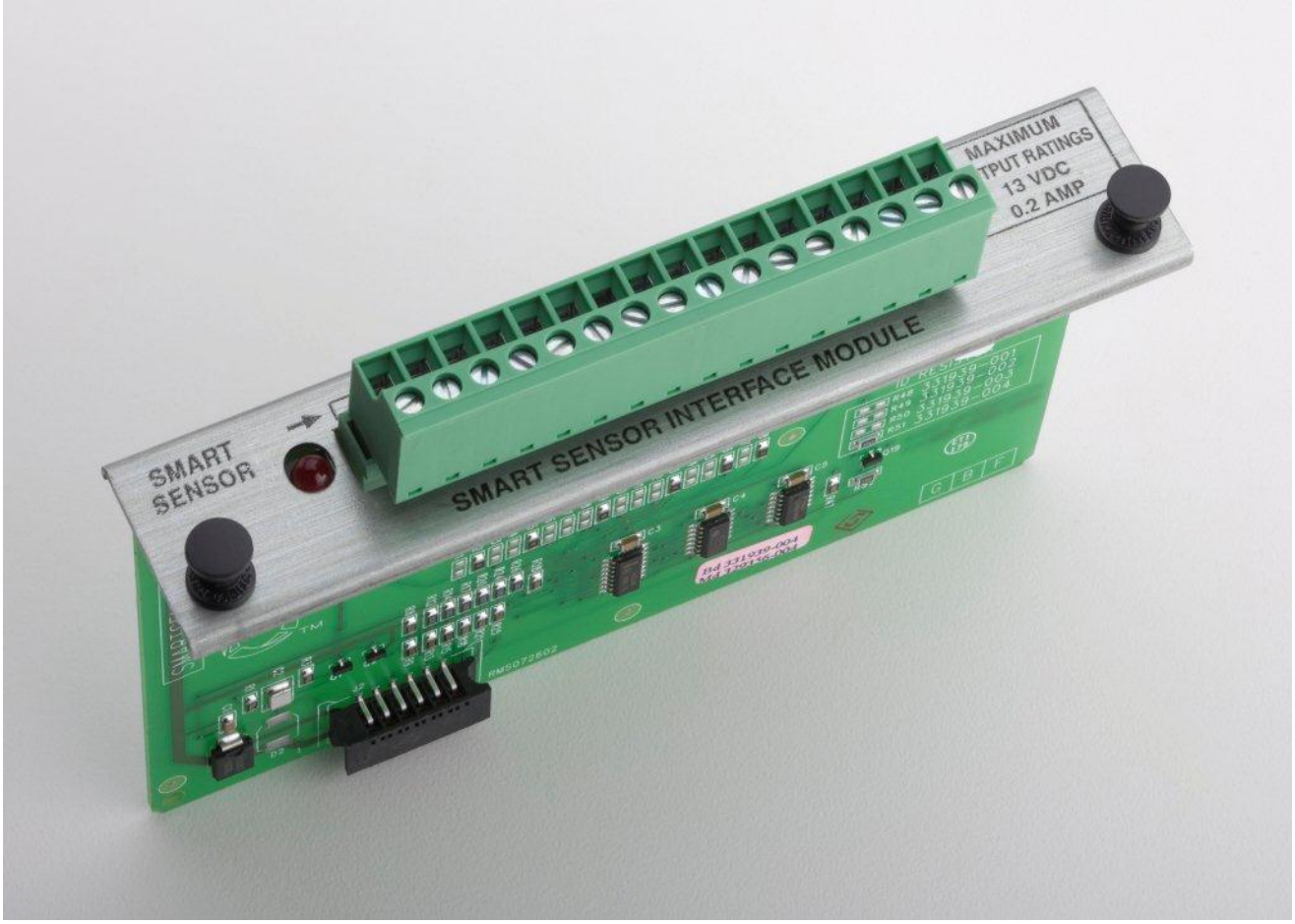

**Figure 1A-8**
**Veeder-Root 332374-XXX**
**Balance Low Pressure Drop Vapor Flow Meter**

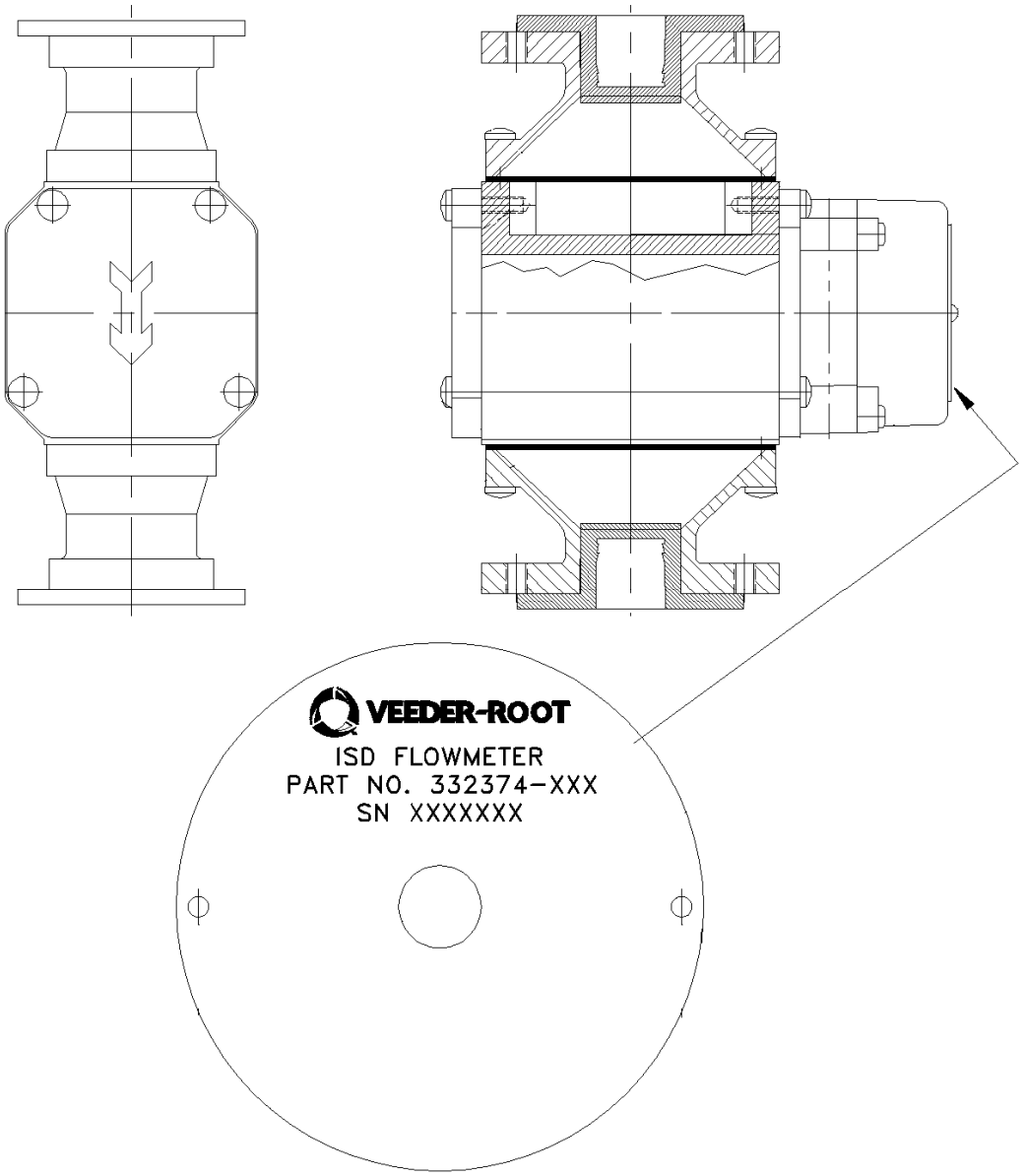

**Figure 1A-9**
**Veeder-Root Optional Wireless Components**

**Wireless TLS RF Console**

**Wireless Receiver**

**Wireless Repeater**

**Wireless Transmitter**

**Wireless Battery Pack**

**Wireless Enclosure**

**Figure 1A-9 (continued)**
**Typical Configuration for Veeder-Root Wireless Components**

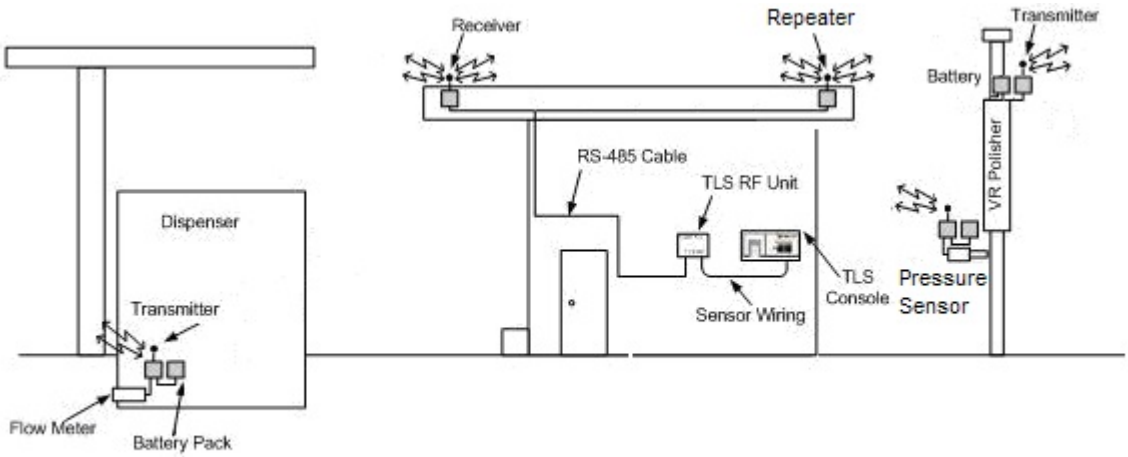


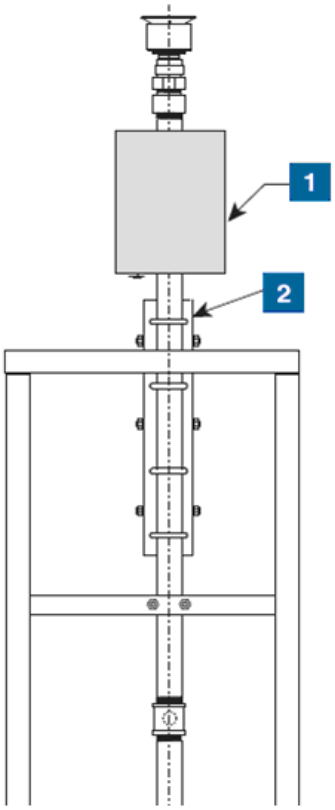


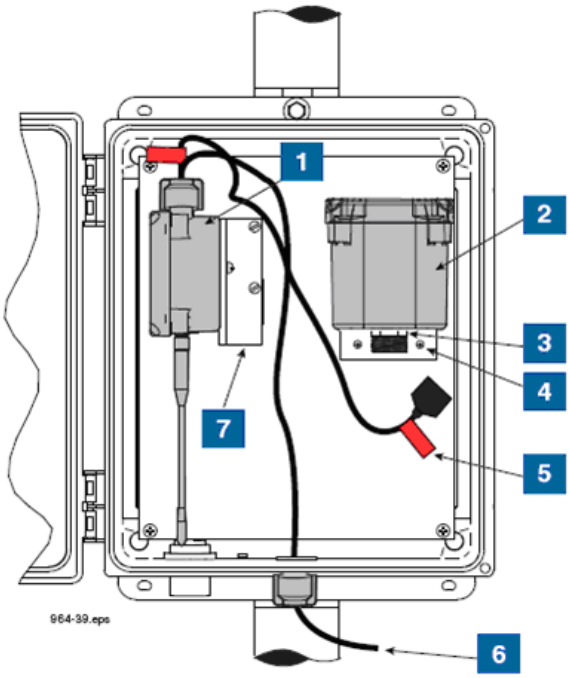


1. CCVP transmitter/battery enclosure on vent stack
2. CCVP support bracket

1. Transmitter
2. Battery pack
3. Thin hex nut
4. Attach Battery L bracket using two #10 taptite screws
5. Battery caution label attached to battery cable (2 places)
6. Cable from CCVP
7. Attached Transmitter L bracket using two #10 taptite screws

**Figure 1A-10**
**Healy Model 9961 Clean Air Separator**

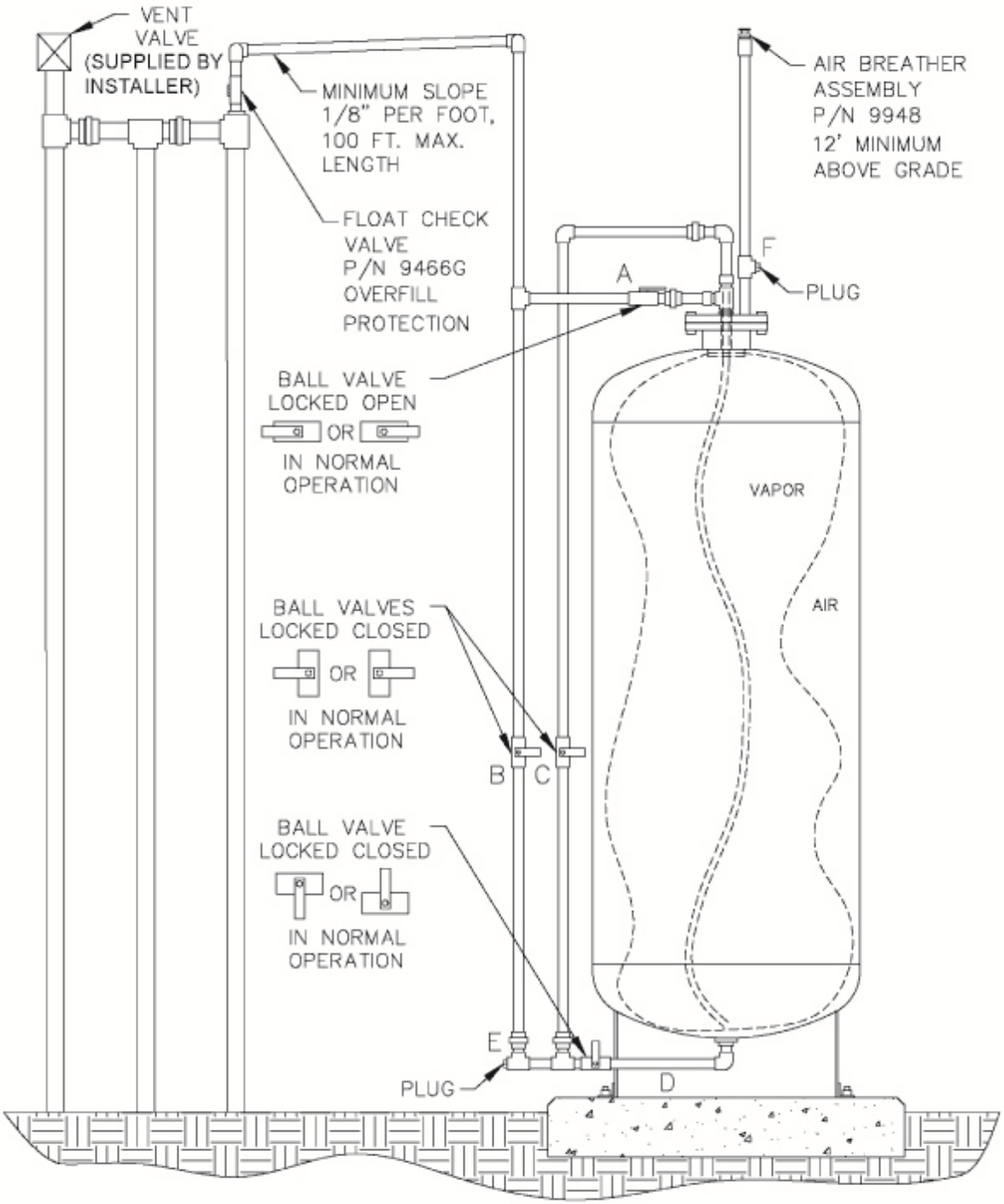

**Figure 1A-11**
**Healy Model 9961 Clean Air Separator**

**Figure 1A-12**
**Healy Model 9961H Clean Air Separator**

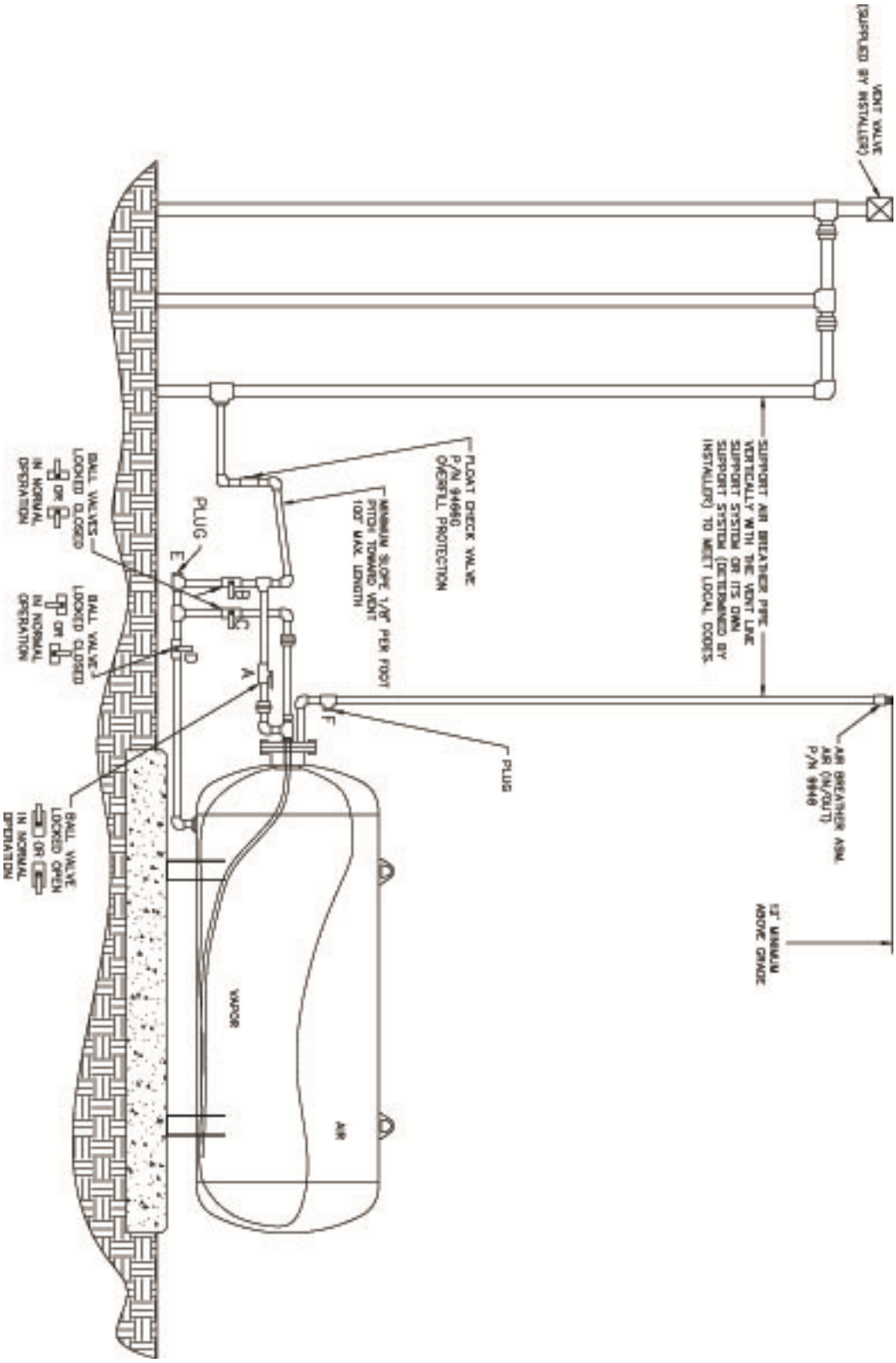

**Figure 1A-13**
**Healy Model 9961H Clean Air Separator**

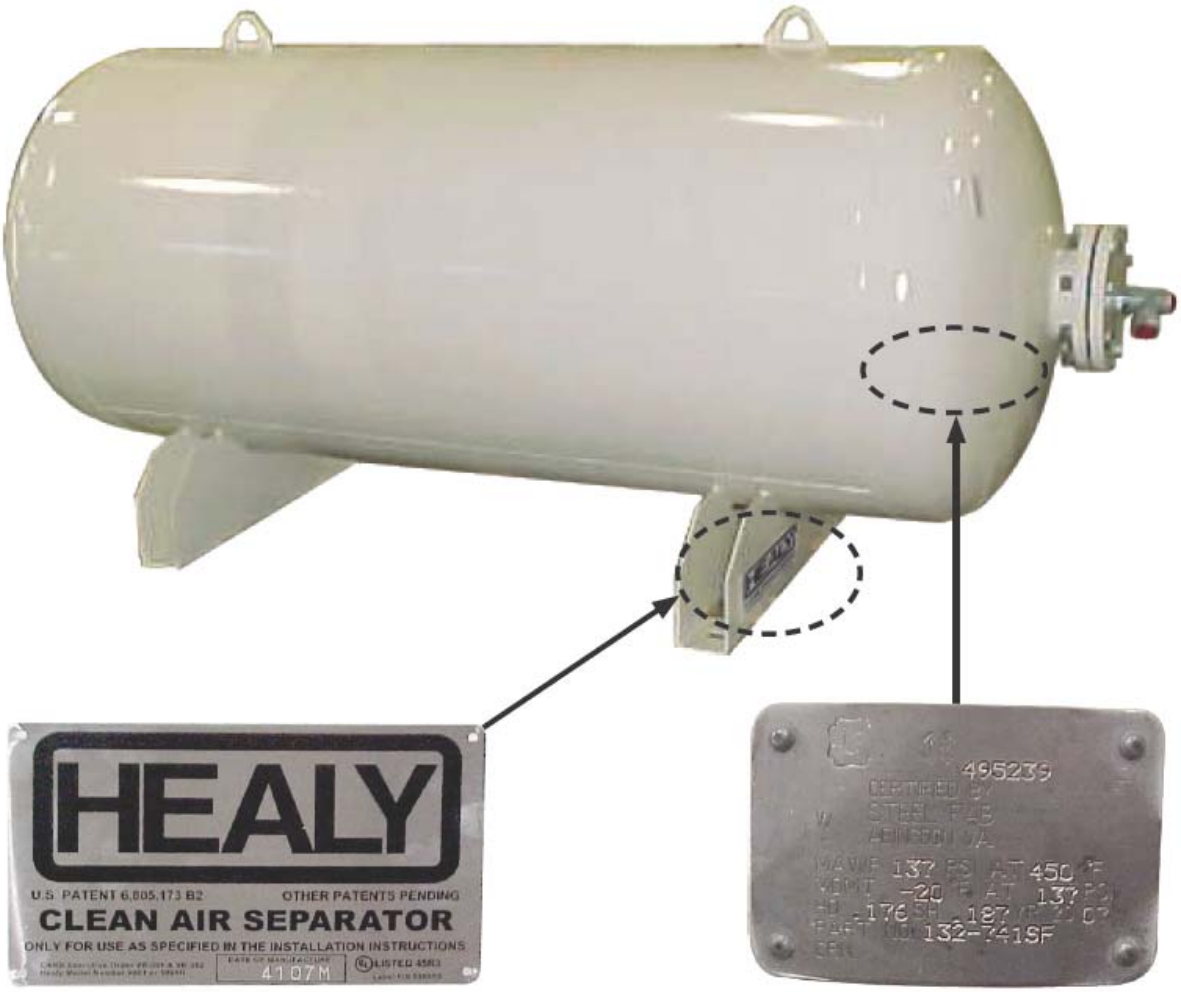


Clean Air Separator Name Plate

Clean Air Separator Data Plate
(not pictured on far side of base)

**Figure 1A-14**

**Typical Liquid Condensate Trap Installed Below the Transition Sump**

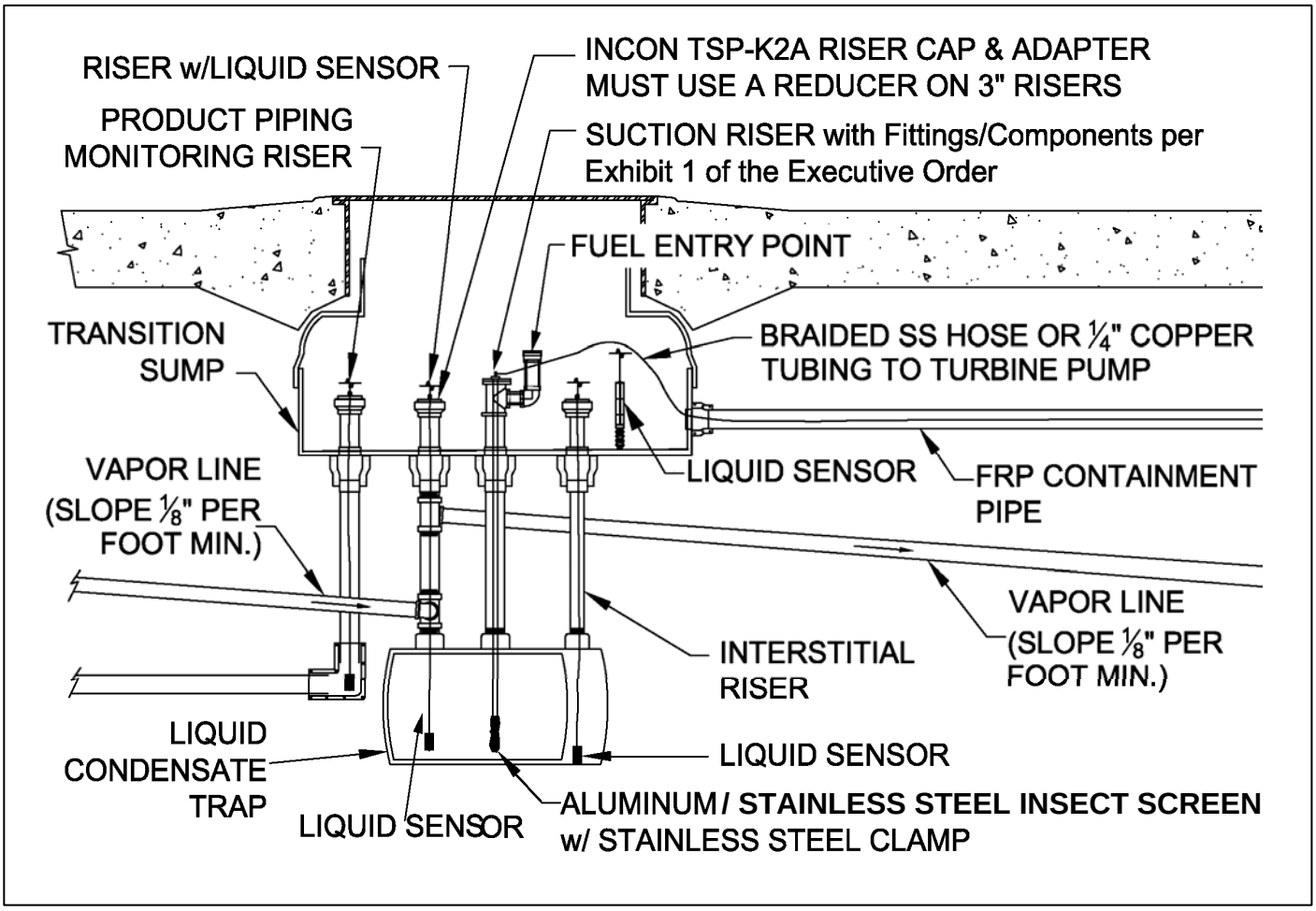

**Figure 1A-14 (continued)**
**Typical Liquid Condensate Trap Installed Inside the Transition Sump**

**Note:** A Liquid Condensate Trap installed inside a liquid AND vapor tight transition sump that is monitored with a liquid sensor can be single walled (if installed before July 1, 2004).

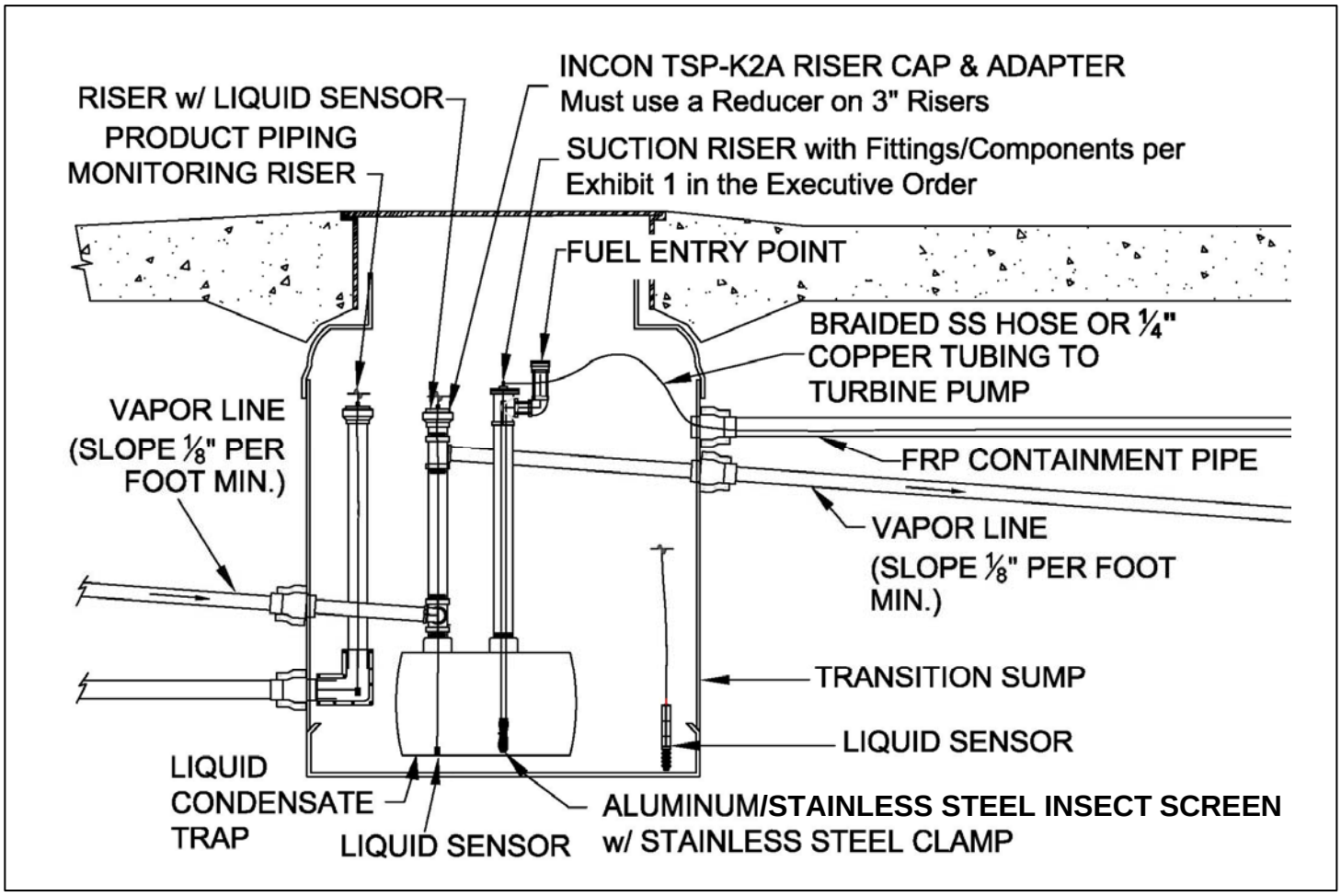

**Figure 1A-15**
**Hirt VCS 100 Thermal Oxidizer and Indicator Panel**

VCS 100 Identification Plate

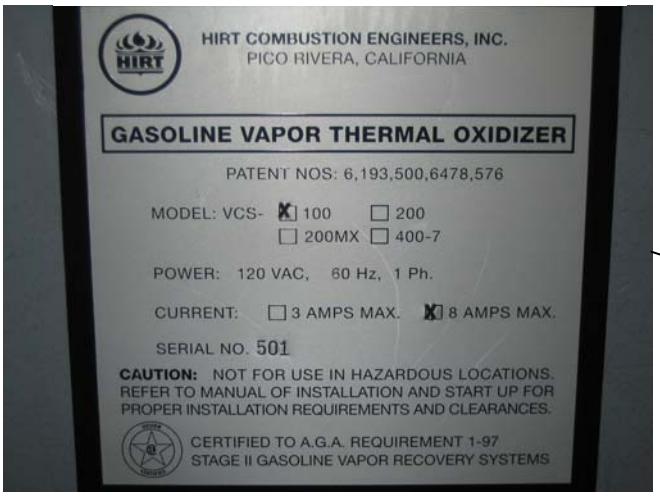


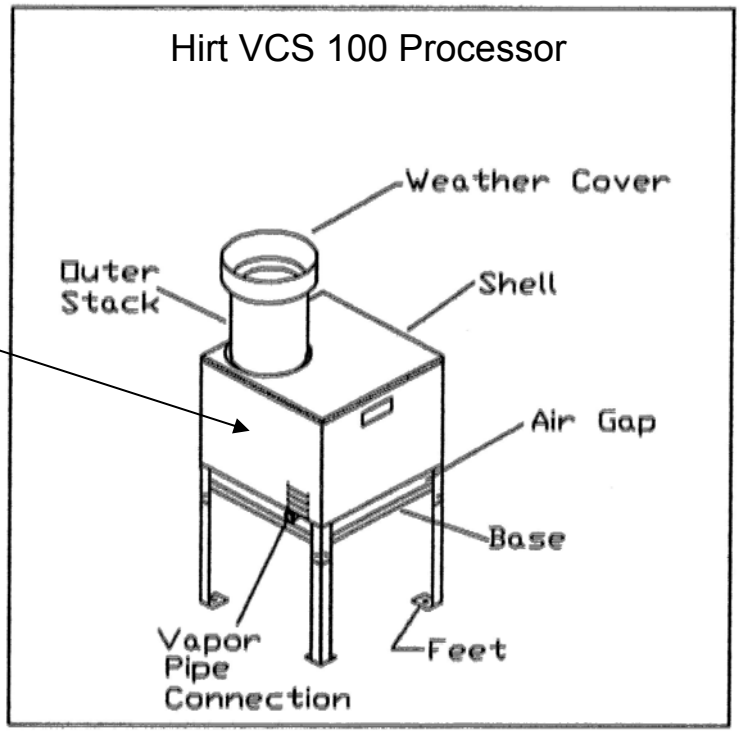


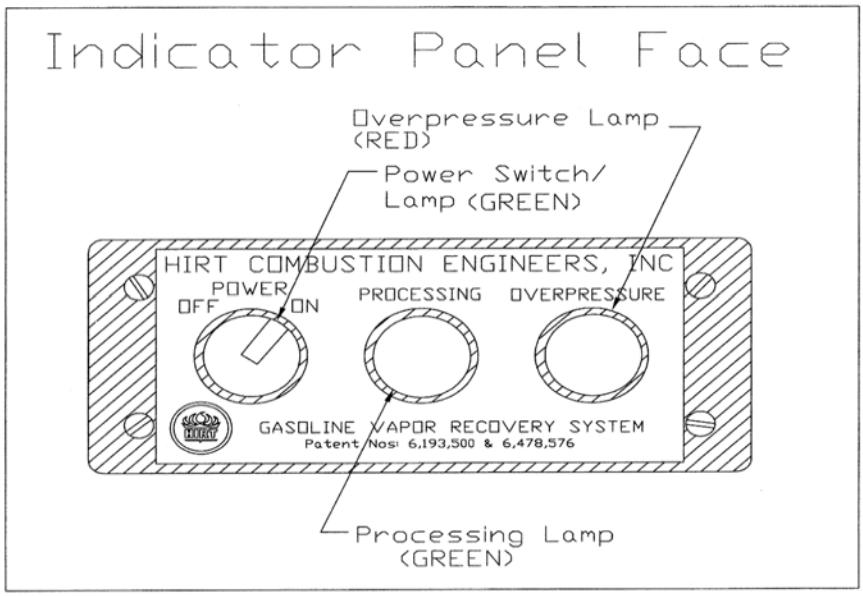

**Figure 1A-15 (continued)**
**Typical Hirt VCS100 Thermal Oxidizer Processor**

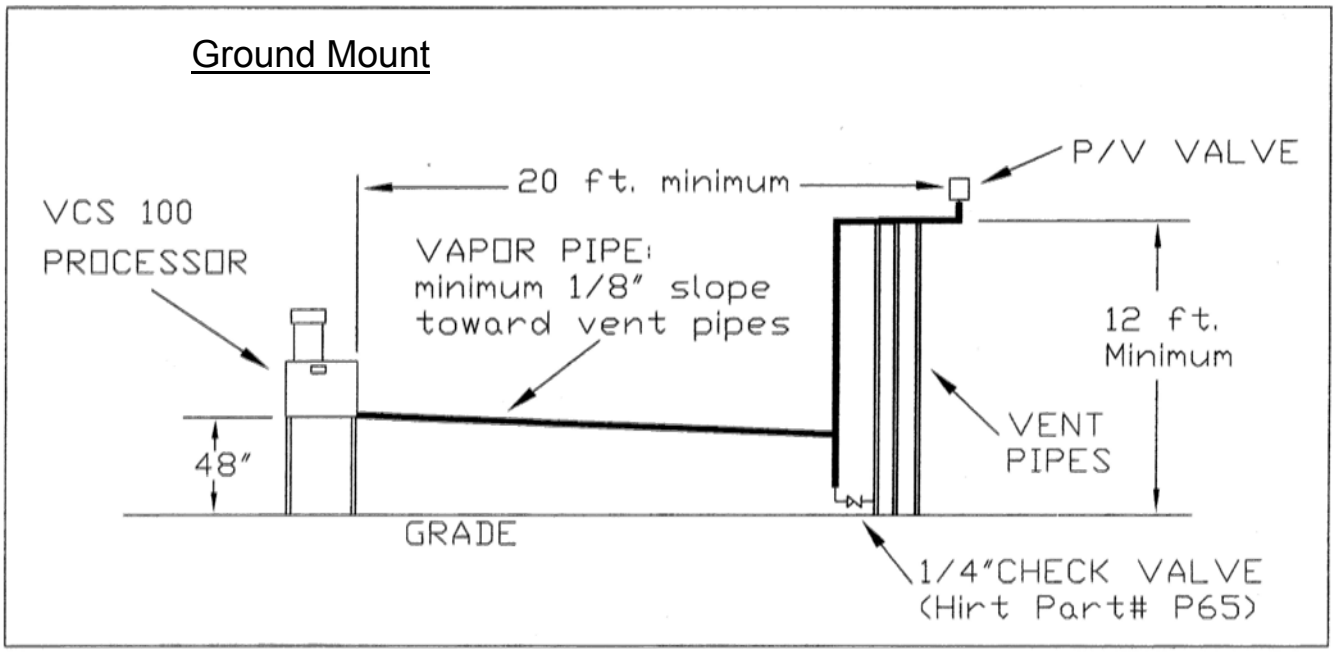


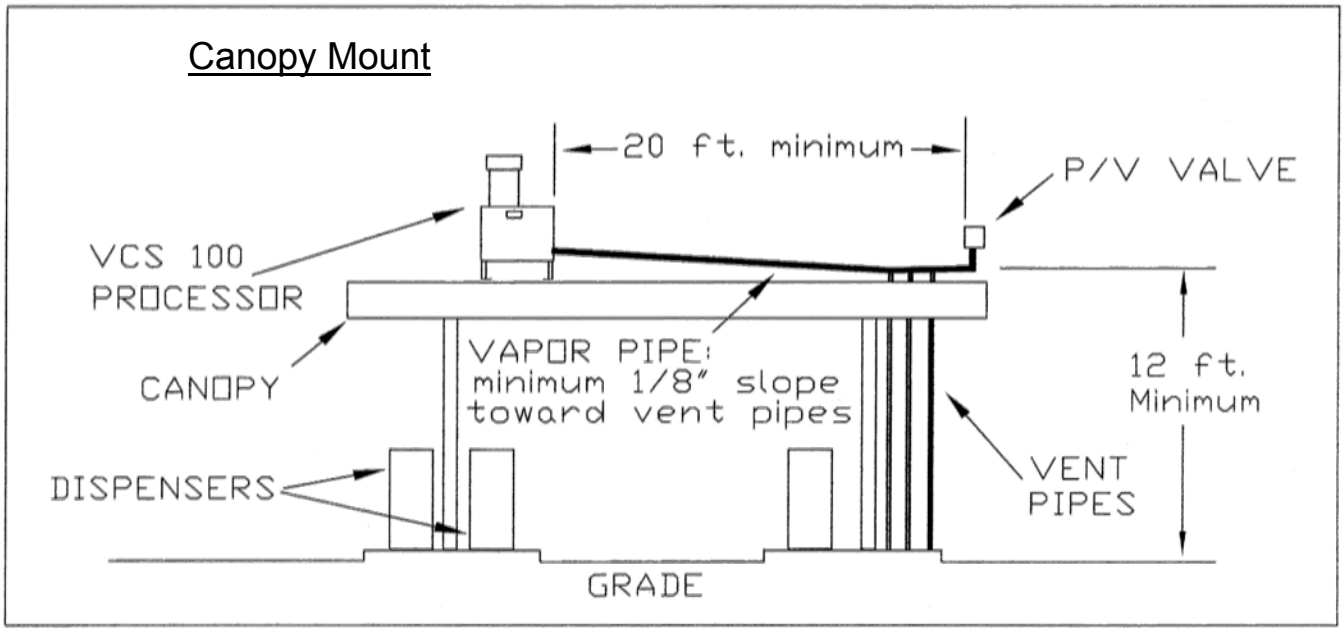

**Figure 1A-16**
**Veeder-Root**
**Maintenance Tracker Technician Key**

**Figure 1-A 17**
**Veeder-Root**
**RS232 Interface Modules**
**Required for Maintenance Tracker**

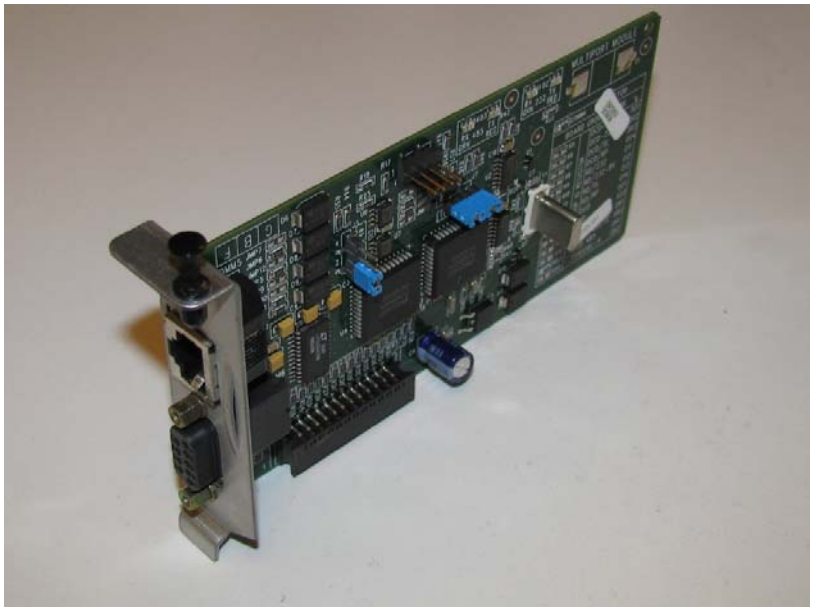

**Figure 1A-18**
**INCON TS-550**

**INCON TEMSXXXX/YV**
**INCON T550XXXX/YYYYV**
**INCON T5000XXXX/YYYYV**

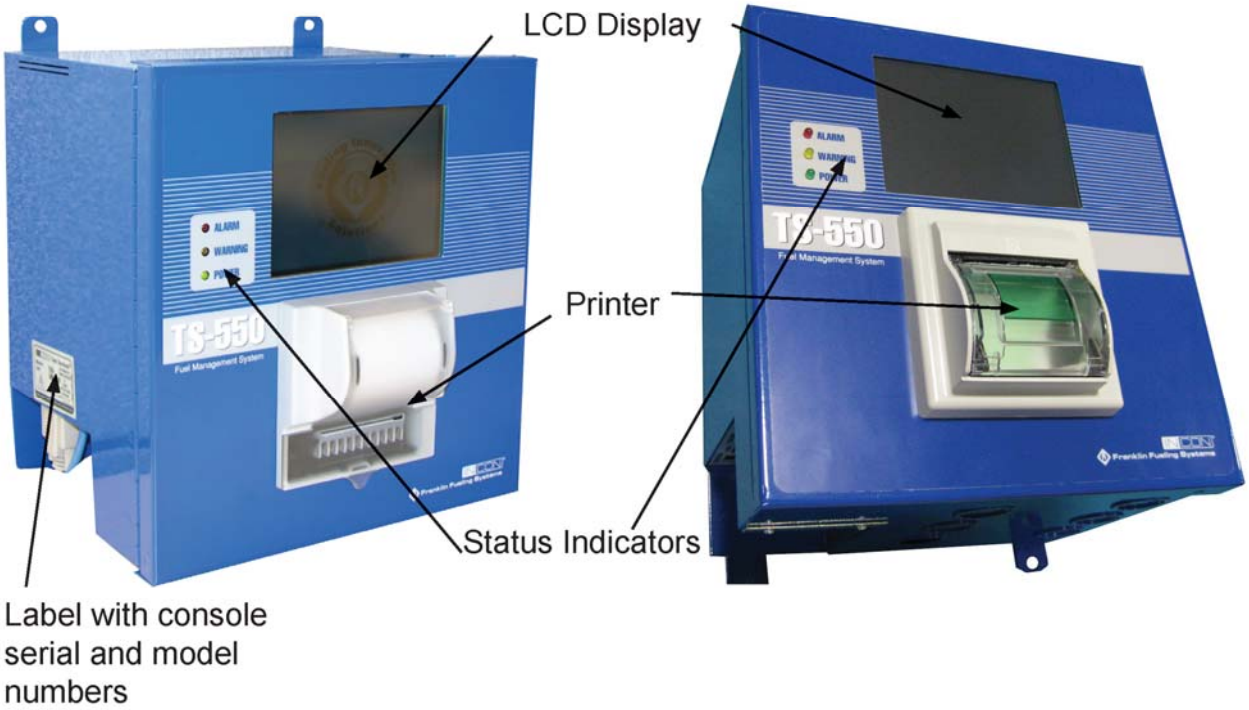


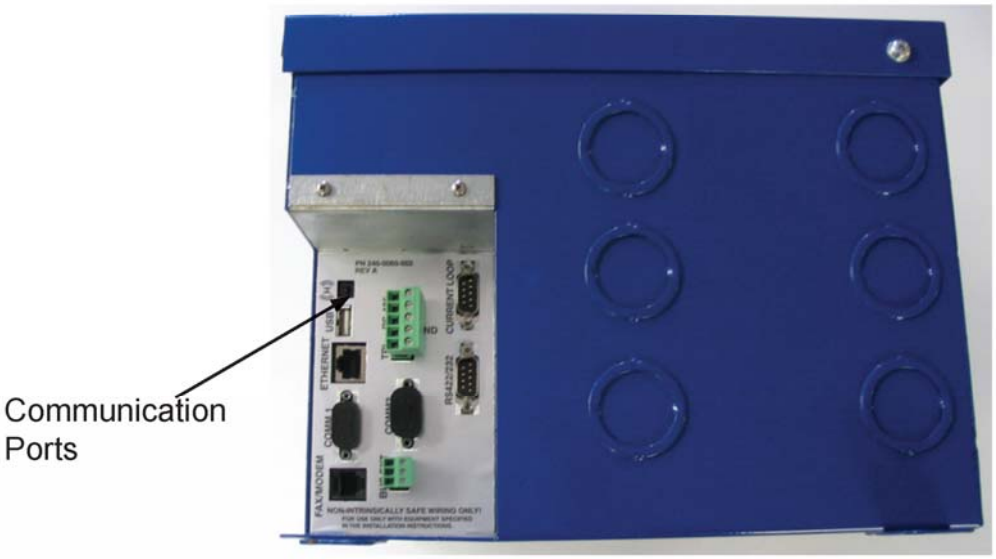

**Figure 1A-19**
**INCON TS-VFM**
**Vapor Flow Meter**

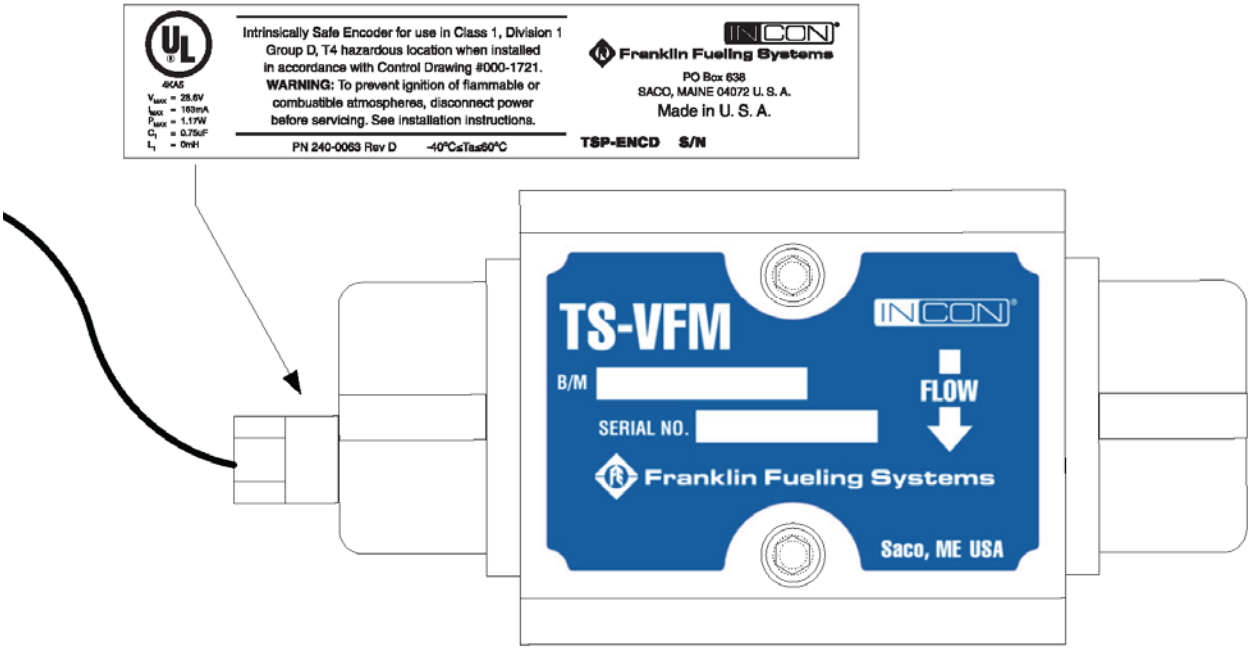


**Figure 1A-20**
**INCON TS-VPS**
**Vapor Pressure Sensor**

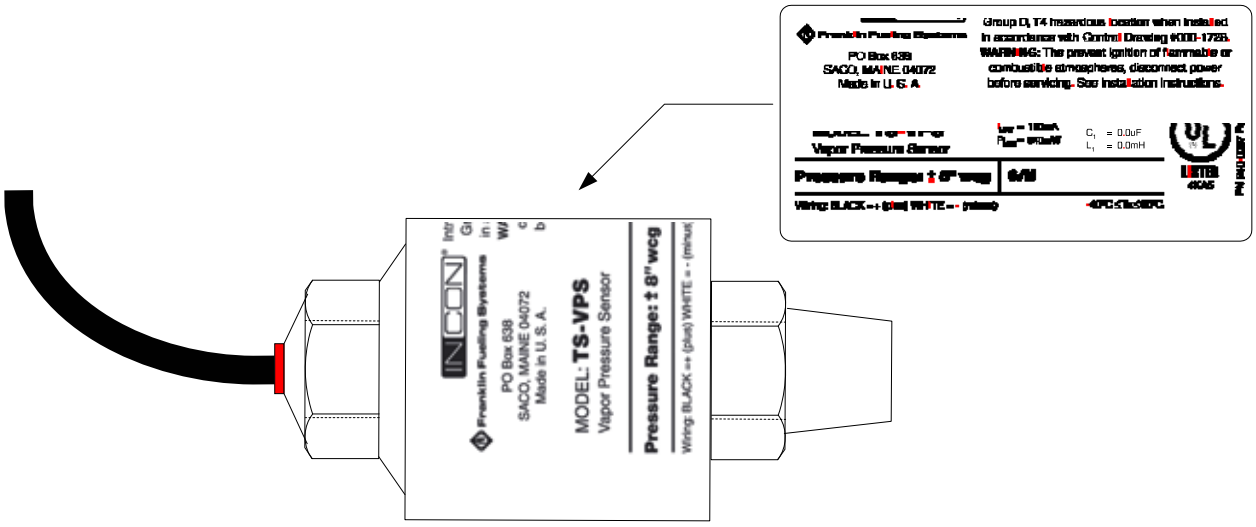

**Figure 1A-21**
**INCON TS-DTU / P**
**Data Transfer Unit**

Label with DTU Serial
Number and ID Number

**Figure 1A-22**
**VST Green Machine Processor**

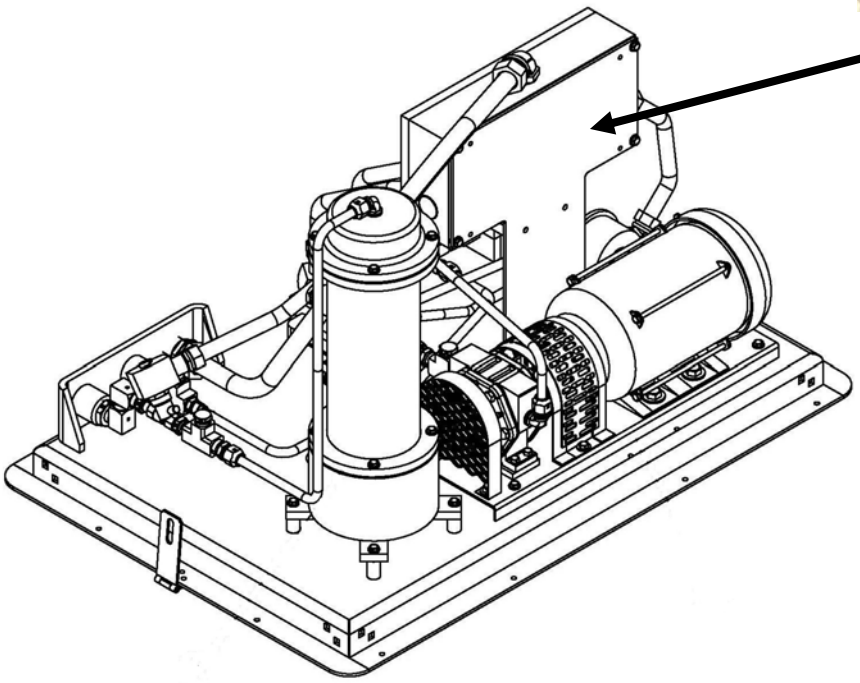

Label with serial number is located inside the Green Machine housing on the electrical junction box.

**Figure 1A-22 continued**
**VST Green Machine, Typical Ground Mounted Configuration**

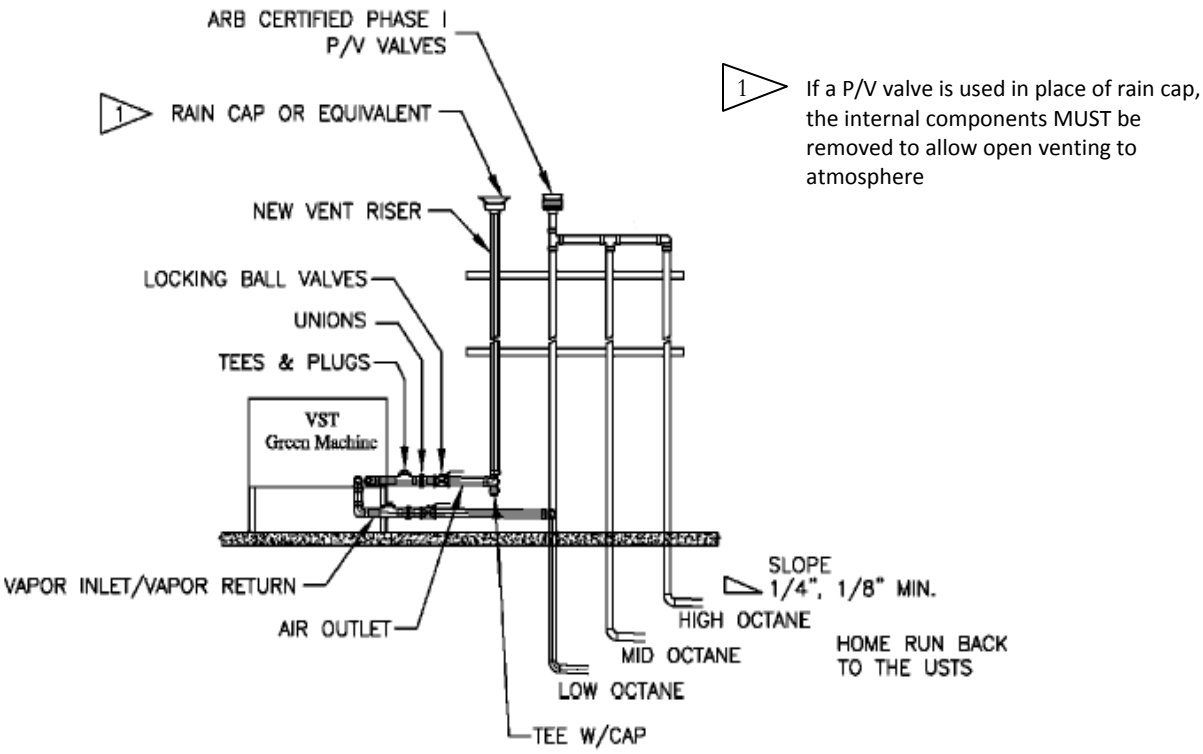


**VST Green Machine, Typical Vent Mounted Configuration**

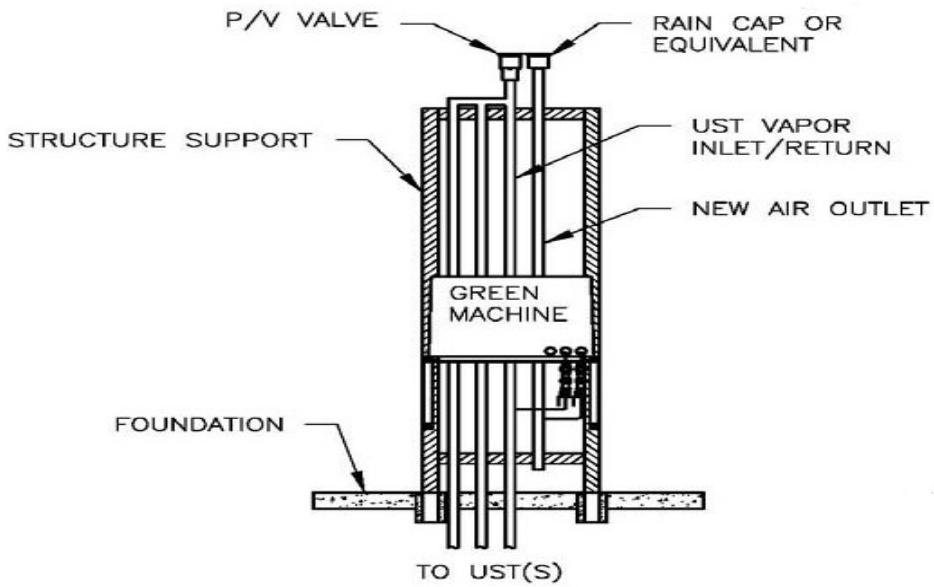

**Figure 1A-22 Continued**
**VST Green Machine Control Panel**

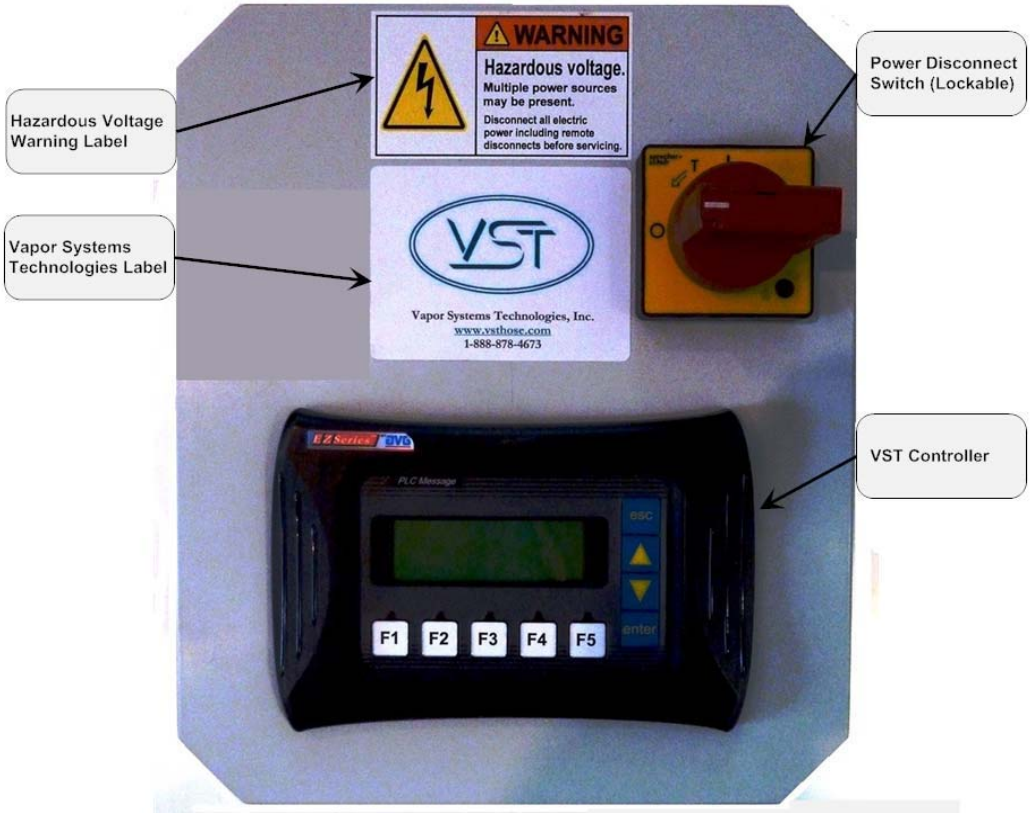


**VST Green Machine Port Combiner**