State of California
AIR RESOURCES BOARD

EXECUTIVE ORDER VR-205-A

Vapor Systems Technologies, Inc.
Phase II Enhanced Vapor Recovery (EVR) System
with Hirt VCS 100 Thermal Oxidizer
Not Including In-Station Diagnostics (ISD)

WHEREAS, the California Air Resources Board (ARB) has established, pursuant to California Health and Safety Code sections 25290.1.2, 39600, 39601 and 41954, certification procedures for systems designed for the control of gasoline vapor emissions during motor vehicle fueling operations (Phase II EVR vapor recovery systems) in its CP-201, ***Certification Procedure for Vapor Recovery Systems at Gasoline Dispensing Facilities*** (Certification Procedure) as last amended May 25, 2006, incorporated by reference in title 17, California Code of Regulations, section 94011;

WHEREAS, ARB has established, pursuant to California Health and Safety Code sections 39600, 39601, 39607, and 41954, test procedures for determining the compliance of Phase II vapor recovery systems with emission standards;

WHEREAS, Hirt Combustion Engineers, Inc. (Hirt) has applied for certification of the Hirt VCS 100 Thermal Oxidizer as an alternate component for tank pressure management on the VST Phase II Enhanced Vapor Recovery (EVR) System Not Including In-Station Diagnostics (ISD) previously certified in Executive Order VR-203;

WHEREAS, the Certification Procedure provides that the ARB Executive Officer shall issue an Executive Order if he or she determines that the vapor recovery system conforms to all of the applicable requirements set forth in the Certification Procedure;

WHEREAS, G-01-032 delegates to the Chief of the Monitoring and Laboratory Division the authority to certify or approve modifications to certified Phase I and Phase II vapor recovery systems for gasoline dispensing facilities;

WHEREAS, I, William V. Loscutoff, Chief of the Monitoring and Laboratory Division, find that the VST Phase II EVR System conforms with all requirements set forth in the Certification Procedure, including compatibility when fueling vehicles equipped with onboard refueling vapor recovery systems, and results in a vapor recovery system which is at least 95 percent efficient and shall not exceed 0.38 pounds of hydrocarbons per 1,000 gallons of gasoline transferred when tested pursuant to TP-201.2, ***Efficiency and Emission Factor for Phase II Systems*** (May 2, 2008);

NOW, THEREFORE, IT IS HEREBY ORDERED that the VST Phase II EVR System with Hirt VCS 100 Thermal Oxidizer is certified to be at least 95 percent efficient and does not exceed 0.38 pounds of hydrocarbon per 1,000 gallons of gasoline transferred in attended and/or self-service mode when used with an ARB-certified Phase I vapor recovery system

and installed, operated, and maintained as specified herein and in the following exhibits. Exhibit 1 contains a list of the equipment certified for use with the VST Phase II EVR System with Hirt VCS 100 Thermal Oxidizer. Exhibit 2 contains the performance standards, specifications, and typical installation drawings applicable to the VST Phase II EVR System with Hirt VCS 100 Thermal Oxidizer as installed in a gasoline dispensing facility (GDF). Exhibit 3 contains the manufacturing performance standards and specifications. Exhibit 4 provides items required in conducting TP-201.3. Exhibit 5 is the liquid removal test procedure. Exhibit 6 provides items required in conducting TP-201.4. Exhibit 7 is the nozzle bag test procedure. Exhibit 8 is the Hirt VCS 100 Processor Operability Test Procedure. Exhibit 9 is the VST and Hirt Warranties.

IT IS FURTHER ORDERED that compliance with the applicable certification requirements, rules and regulations of the Division of Measurement Standards of the Department of Food and Agriculture, the Office of the State Fire Marshal of the Department of Forestry and Fire Protection, the Division of Occupational Safety and Health of the Department of Industrial Relations, and the Division of Water Quality of the State Water Resources Control Board are made conditions of this certification.

IT IS FURTHER ORDERED that VST and Hirt shall provide a warranty for the vapor recovery system and components to the initial purchaser. The warranty shall be passed on to each subsequent purchaser within the warranty period. The manufacturer of components listed in Exhibit 1 not manufactured by VST or Hirt shall provide a warranty to each of their components certified herein. The warranty shall include the ongoing compliance with all applicable performance standards and specifications and shall comply with all warranty requirements in Section 16.5 of the Certification Procedure. VST, Hirt, or other manufacturers may specify that the warranty is contingent upon the use of trained installers.

IT IS FURTHER ORDERED that every certified component manufactured by VST and Hirt shall be performance tested by the manufacturer as provided in Exhibit 3.

IT IS FURTHER ORDERED that the certified VST Phase II EVR System with Hirt VCS 100 Thermal Oxidizer shall be installed, operated, and maintained in accordance with the ***ARB Approved Installation, Operation, and Maintenance Manual***. A copy of this Executive Order and the ***ARB Approved Installation, Operation and Maintenance Manual*** shall be maintained at each GDF where the certified VST Phase II EVR System and Hirt VCS 100 Thermal Oxidizer are installed.

IT IS FURTHER ORDERED that equipment listed in Exhibit 1, unless exempted, shall be clearly identified by a permanent identification showing the manufacturer's name, model number, and serial number.

IT IS FURTHER ORDERED that any alteration in the equipment parts, design, installation, or operation of the system certified hereby is prohibited and deemed inconsistent with this certification, unless the alteration has been submitted in writing and approved in writing by the Executive Officer or Executive Officer delegate.

IT IS FURTHER ORDERED that the following requirements are made a condition of certification. The owner or operator of the VST Phase II EVR System with Hirt VCS 100 Thermal Oxidizer shall conduct and pass the following tests no later than 60 days after startup and at least once in each twelve month period, using the following test procedures:

- TP-201.3, ***Determination of 2 Inch WC Static Pressure Performance of Vapor Recovery Systems of Dispensing Facilities*** (March 17, 1999);
- TP-201.4, ***Dynamic Back Pressure*** (July 3, 2002) in accordance with the condition listed in item 1 of the Vapor Collection section of Exhibit 2;
- Exhibit 4, ***Required Items in Conducting TP-201.3***;
- Exhibit 5, ***Liquid Removal Test Procedure***;
- Exhibit 6, ***Required Items in Conducting TP-201.4***; and
- Exhibit 8, **Hirt VCS 100 Processor with Indicator Panel Operability Test Procedure**;

Local district at their option may specify the testing frequency and related sequencing of the above tests. Notification of testing, and submittal of test results, shall be done in accordance with local district requirements and pursuant to policies established by that district. Alternative test procedures, including most recent versions of the test procedures listed above, may be used if determined by the ARB Executive Officer or Executive Officer delegate, in writing, to yield equivalent results.

IT IS FURTHER ORDERED that the following requirements are made a condition of certification. The owner or operator of the VST Phase II EVR System shall conduct, and pass, the following test no later than 60 days after startup using the following test procedure: Exhibit 7, ***Nozzle Bag Test Procedure***. Notification of testing, and submittal of test results, shall be done in accordance with local district requirements and pursuant to the policies established by that district. Alternative test procedures, including most recent versions of the test procedures listed above, may be used if determined by the ARB Executive Officer or Executive Officer delegate, in writing, to yield equivalent results.

IT IS FURTHER ORDERED that, except as provided above, local districts at their option will specify the testing, related sequencing, and testing frequency of the nozzle vapor valves. If the district requires the nozzle vapor valve be tested, the test shall be conducted in accordance with Exhibit 7, ***Nozzle Bag Test Procedure***.

IT IS FURTHER ORDERED that the VST Phase II EVR System shall be compatible with gasoline in common use in California at the time of certification. The VST Phase II EVR System is not compatible with gasoline that has a methanol content greater than 5 percent, an ethanol content greater than 10 percent, or a methyl tert butyl ether (MTBE) content greater than 15 percent. Any modifications to comply with future California gasoline requirements shall be approved in writing by the Executive Officer or Executive Officer delegate.

IT IS FURTHER ORDERED that the certification of the VST Phase II EVR System with Hirt VCS 100 Thermal Oxidizer is valid through April 1, 2012.

IT IS FURTHER ORDERED that this Executive Order shall apply to new installations or major modification of Phase II Systems with a throughput of less than or equal to 600,000 gallons per year. Use of this Executive Order for new installations or major modifications at a GDF with a throughput of more than 600,000 gallons per year is not authorized.

Executed at Sacramento, California, this 6th day of May 2009.

William V. Loscutoff, Chief
Monitoring and Laboratory Division

Attachments:

Exhibit 1	Equipment List
Exhibit 2	System Specifications
Exhibit 3	Performance Standards and Specifications
Exhibit 4	Required Items in Conducting TP-201.3
Exhibit 5	Liquid Removal Test Procedure
Exhibit 6	Required Items in Conducting TP-201.4
Exhibit 7	Nozzle Bag Test Procedure
Exhibit 8	Hirt VCS 100 Processor with Indicator Panel Operability Test Procedure
Exhibit 9	Warranty

Executive Order VR-205-A
VST Phase II EVR System with Hirt Thermal Oxidizer

Exhibit 1
Equipment List

Component	Manufacturer/ Model
Nozzle	VST Model VST-EVR-NB (Figure 1A-1) VST Model VST-EVR-NB-R (Rebuilt)
Coaxial Curb Hose	VST Model VDV-EVR Series (Figure 1A-2)
Coaxial Whip Hose	VST Model VSTA-EVR Series (Figure 1A-2)
Breakaway Coupling	VST Model VSTA-EVR-SBK (Figure 1A-2)
Hanging Hardware with Liquid Removal Device	(Figure 1A-3)
Hirt Thermal Oxidizer With Indicator Panel	Hirt Model VCS 100 (Figure 1A-4) Leg Attachments: 5” – M39 48”- M40
Hirt 1/4" Check Valve[1]	Hirt P65

[1] Optional component used with Hirt Thermal Oxidizer System.

Figure 1A-1
Model VST-EVR- NB Nozzle

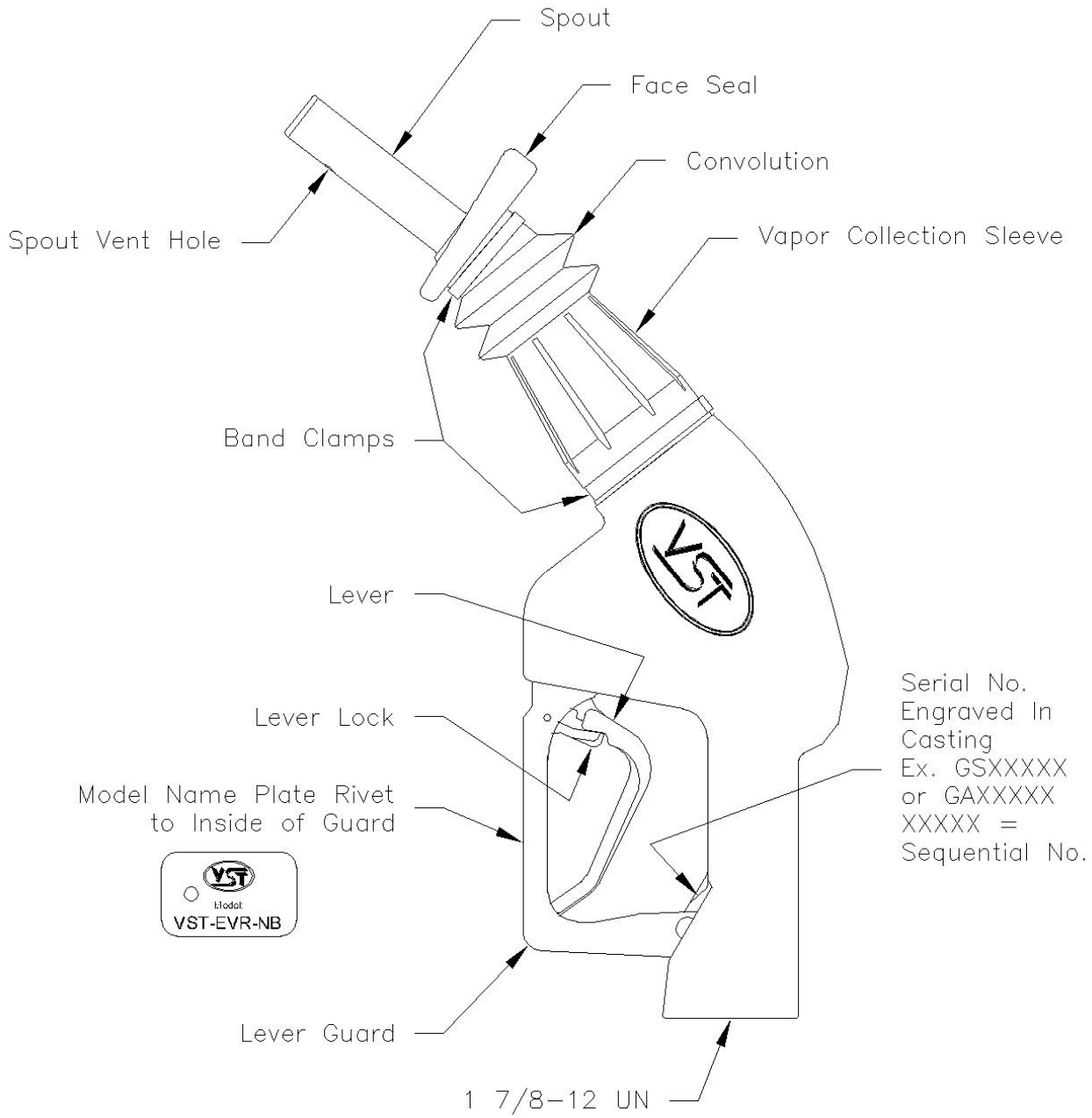

Figure 1A-2
VST Hanging Hardware
(Nozzle, Coaxial Curb Hose, Breakaway, and Coaxial Whip Hose)

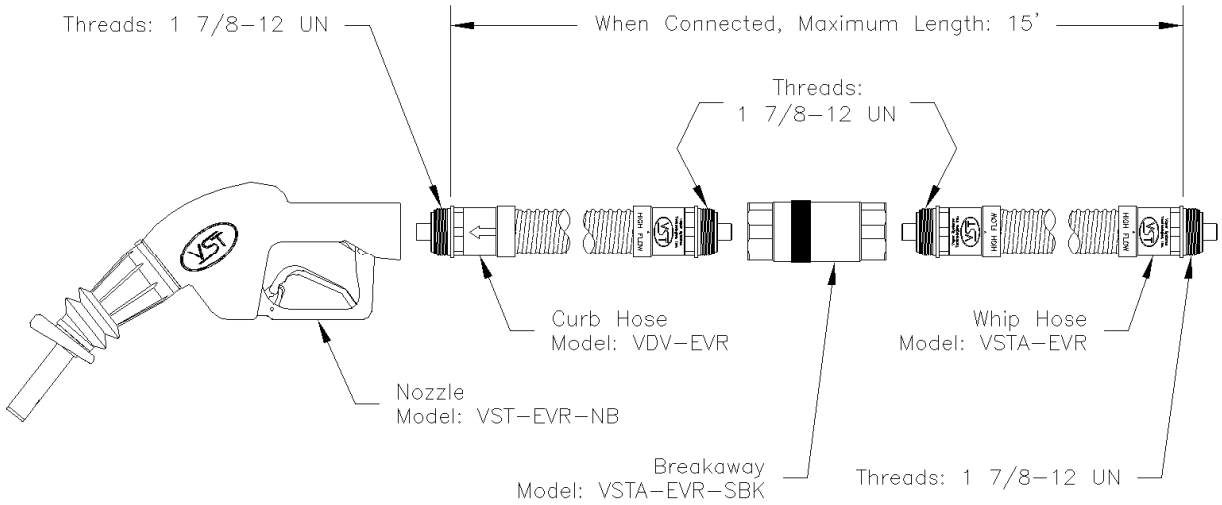

Figure 1A-2 (continued)
VST Hanging Hardware
(Nozzle, Coaxial Curb Hose, Breakaway, and Coaxial Whip Hose)

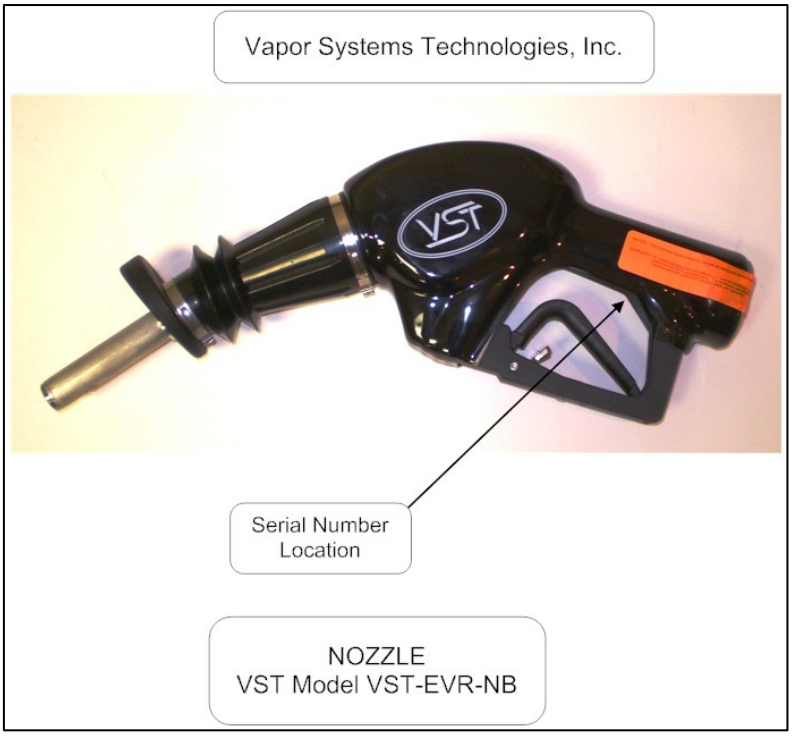

Figure 1A-3
Typical VST Hanging Hardware with Liquid Removal Device

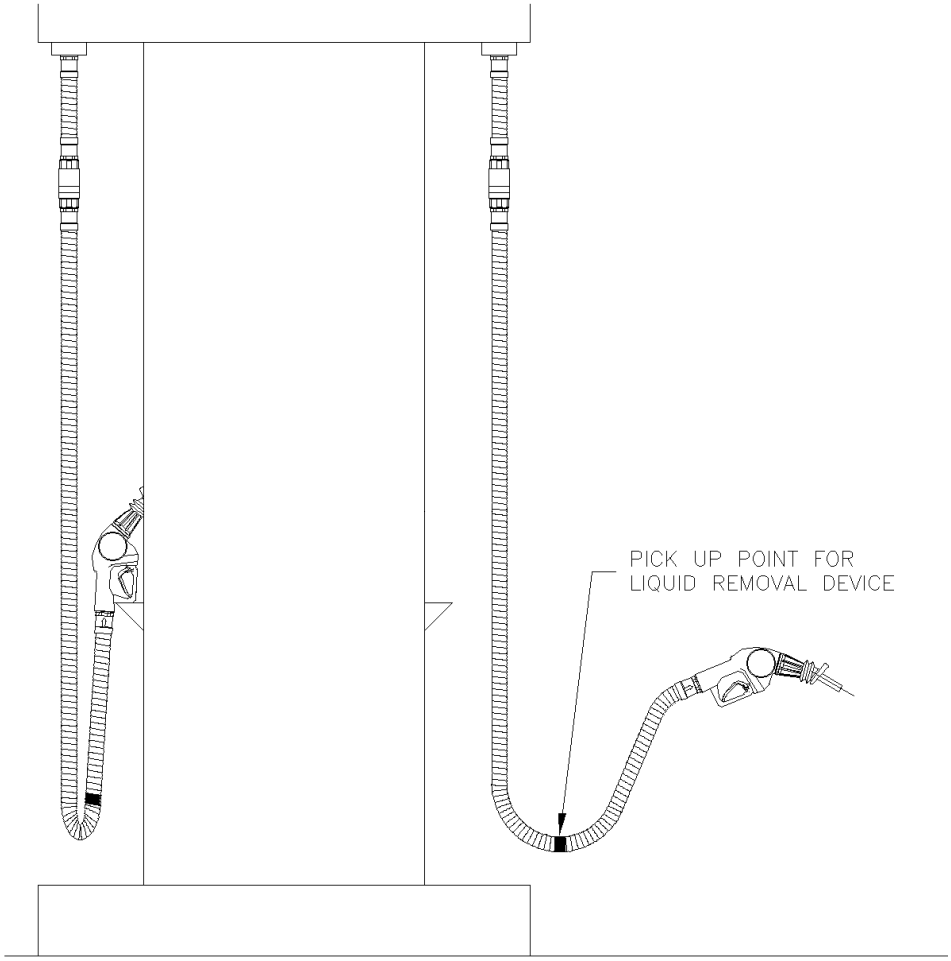

Figure 1A-4
Hirt VCS 100 Thermal Oxidizer and Indicator Panel

VCS 100 Identification Plate

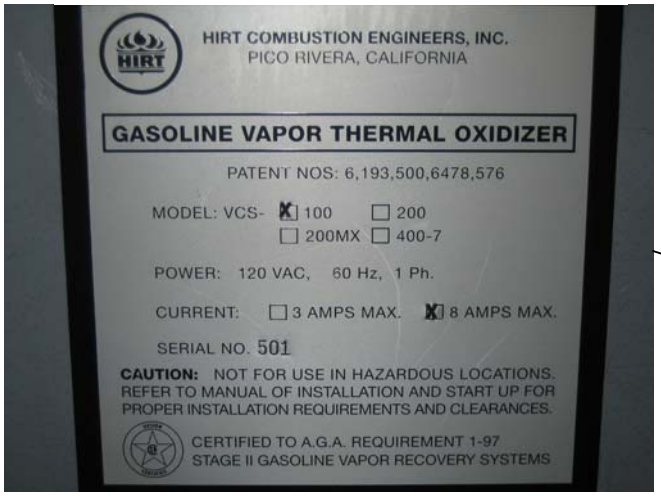

Hirt VCS 100 Processor

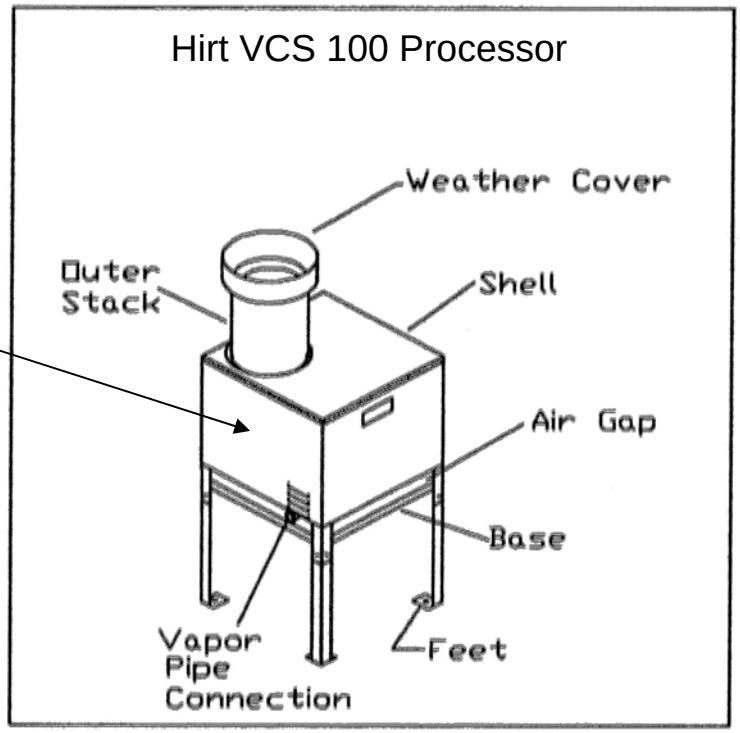

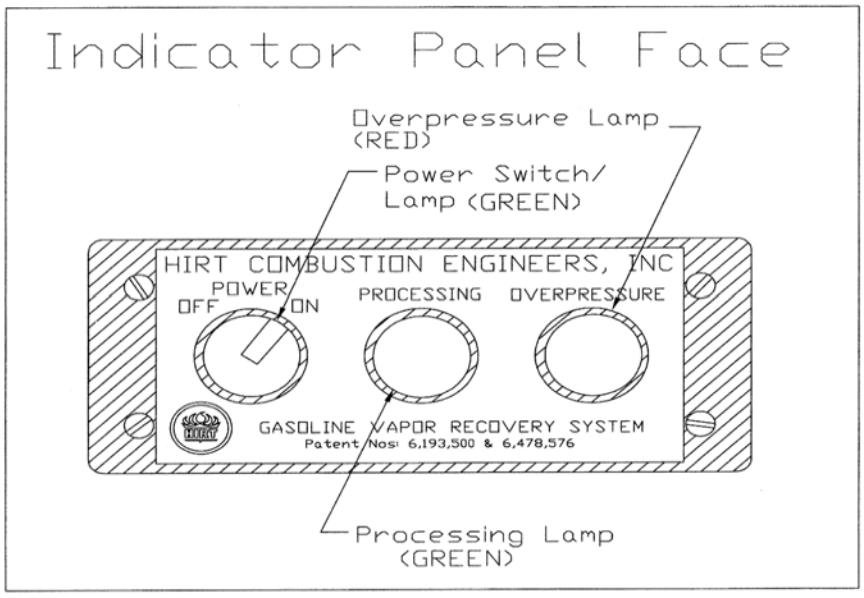

Figure 1A-4 (continued)
Typical Hirt VCS100 Thermal Oxidizer Processor

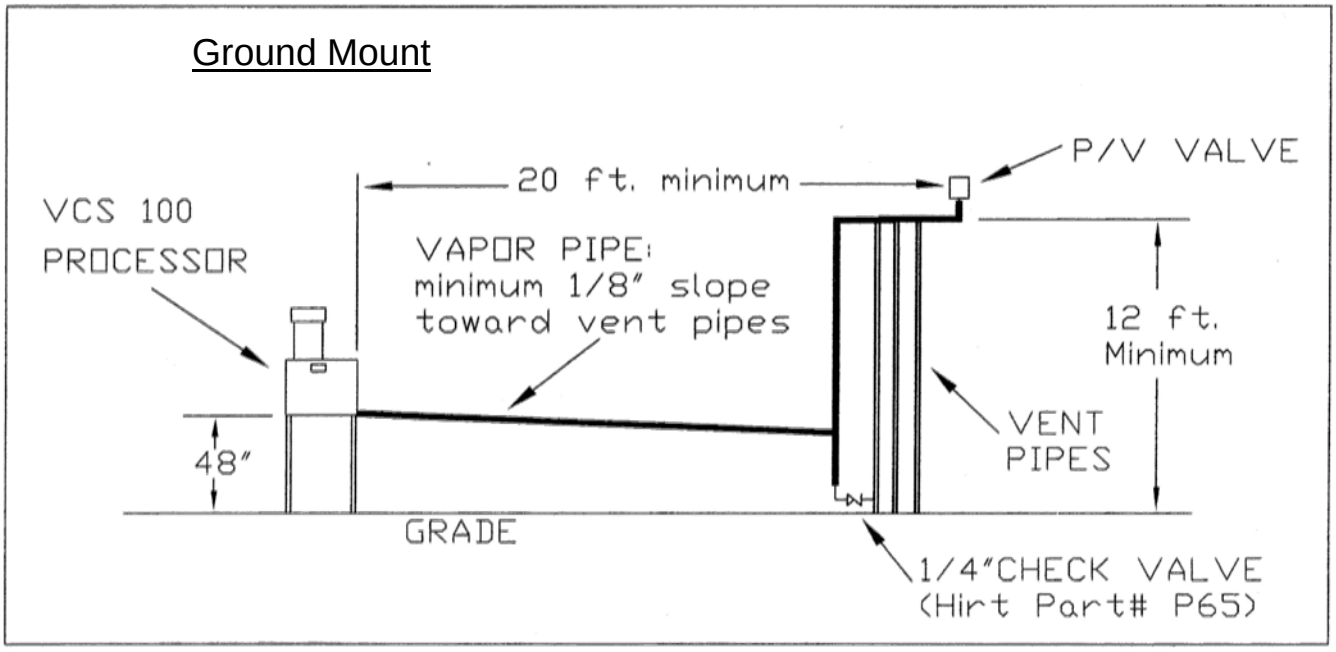

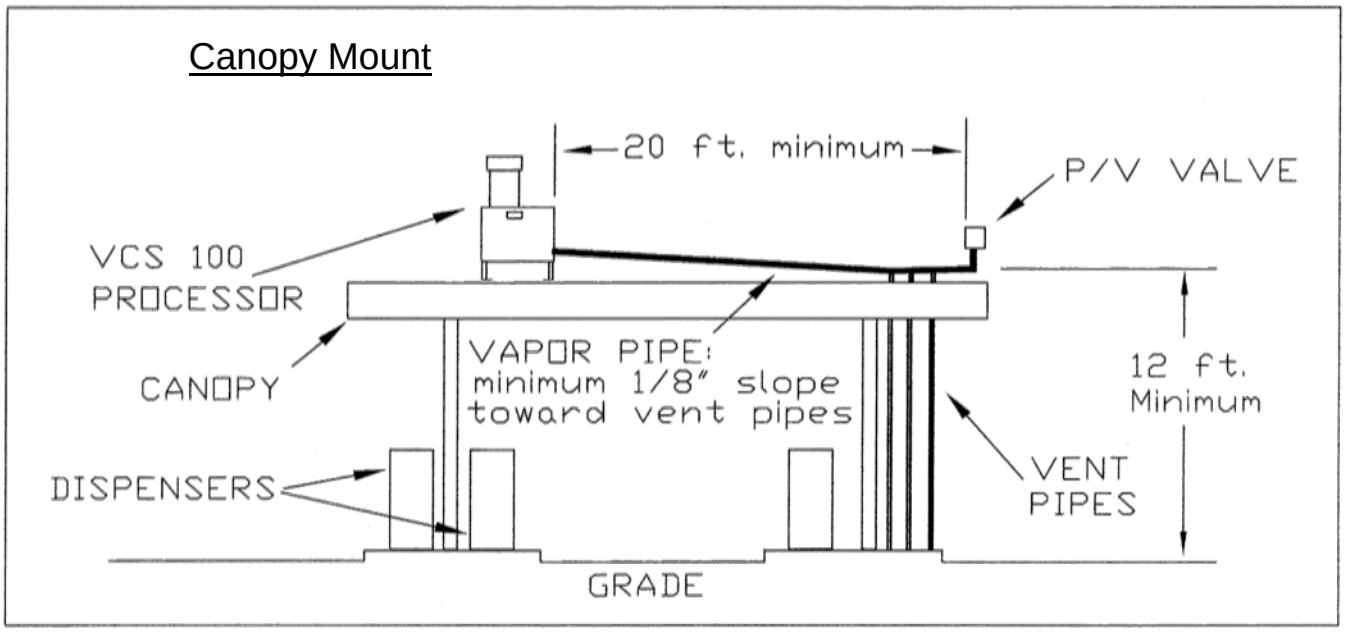

Executive Order VR-205-A
VST Phase II EVR System with Hirt Thermal Oxidizer

Exhibit 2
System Specifications

This exhibit contains the installation, maintenance and compliance standards and specifications that apply to the VST Phase II EVR System installed at a gasoline dispensing facility (GDF). All components must be installed, maintained, and operated in accordance with the specifications in the **ARB Approved Installation, Operation and Maintenance Manual** (IOM). Installation, maintenance and repair of system components, including removal and installation of such components in the course of any required tests, shall be performed by technicians certified by the appropriate manufacturer. Additional certifications may be required in accordance with local district requirements. Provided that there are no other local district requirements, a GDF owner/operator can remove and install nozzles, curb hoses, breakaways, and whip hoses without a manufacturer certification.

Nozzle

1. A vapor collection sleeve shall be installed on the nozzle at the base of the spout, as shown in **Figure 2B-1**.

2. The VST Model VST–EVR-NB nozzle has an integral vapor valve which prevents the loss of vapor from the underground storage tanks, ensures proper operation of the system and prevents the ingestion of air into the system. The performance of the nozzle vapor valve can be determined by items 2.1 or 2.2.

   2.1. The maximum allowable leak rate for the nozzle vapor path, as determined by TP-201.2B, shall not exceed 0.07 cubic feet per hour (CFH) at a pressure of two inches water column (2.00” WC)

   2.2. Verification of the integrity of the vapor valve can be performed on installed nozzles using the nozzle bag test procedure in Exhibit 7.

3. The gasoline flow rate of the nozzle shall be between six (6.0) and ten (10.0) gallons per minute as determined by the applicable provisions of section 6 or 7 of Exhibit 5 or by direct observation for 30 seconds minimum at the maximum hand held position.

Vapor Collection

1. The system pressure drop from the nozzle to the UST, as determined by TP-201.4 (Methodology 1) and Exhibit 6, shall not exceed the following:

   0.35 inches WC at a flow rate of 60 CFH of Nitrogen; and
   0.62 inches WC at a flow rate of 80 CFH of Nitrogen.

Coaxial Hoses

1. The maximum length of the curb hose, breakaway, and whip hose combined shall not exceed fifteen feet as measured from the base of the nozzle to the end of dispenser adapter or dispenser, as appropriate.

2. The liquid removal rate shall not be less than five milliliters per gallon (5 ml/gal) as determined by Exhibit 5 when tested with a gasoline flow rate between six (6.0) and ten (10.0) gallons per minute. Liquid removal requirement is applicable to all grade of gasoline.

3. Any hose configuration is allowed when installed in accordance with the IOM section titled "Hoses".

Breakaway Couplings

1. The VST breakaway couplings are non-reconnecting and shall be replaced following a drive-off. If reusing hanging hardware other than the breakaway following a drive-off, testing is required to ensure proper operation and no observed leaks of the hanging hardware prior to returning the fueling point to operation. The procedure for testing the hanging hardware following a drive-off is referenced in the IOM section titled "Drive-offs and Other Customer Abuse."

Flow Limiter

1. No flow limiter is allowed for this system.

Hirt VCS 100 Thermal Oxidizer

1. The processor vapor integrity shall demonstrate compliance with the static pressure decay criteria of TP-201.3 and Exhibit 4.

2. Unless there is maintenance or testing being conducted on the processor, the processor shall be on (power lamp is lit) and in the automatic vapor processor mode. The ball valve on the inlet of the processor shall be locked in the open position shown in **Figure 2B-2** and the 3-Way Valve handle shall be pointing down in the Normal Operating Position (Opened to UST Ullage) shown in Figure 2B-3 during normal processor operation. The handles of the ball valves shall not be removed.

3. Piping to and from the processor shall be sloped 1/8" per foot minimum toward the vent line(s).

4. The VCS 100 Indicator Panel shall be installed at a location that is most likely to be occupied by the station attendant during normal station operation (i.e., cash register).

5. The processor shall activate when the processor is exposed to an atmospheric pressure input and the Processing lamp at the Indicator Panel shall light within three (3) minutes as determined by Exhibit 8.

6. When the processor is exposed to an atmospheric pressure input, the OVERPRESSURE lamp at the Indicator Panel shall light within sixty two (62) minutes as determined by Exhibit 8.

7. If the OVERPRESSURE lamp lights, the system is not in proper working order. The GDF owner/operator shall immediately take the following actions:

   a. record the date and time the OVERPRESSURE lamp lit in the station's maintenance and alarm records;
   b. investigate the cause of the OVERPRESSURE light as provided by section 8 of the Installation, Operations, and Maintenance Manual. Record results of inspections, maintenance, and/or testing conducted in the station's maintenance and alarm records; and if necessary,
   c. record the date and time when the GDF owner/operator called the maintenance contractor for service.

Pressure/Vacuum Vent Valves for Storage Tank Vents

1. All P/V vent valves shall be an ARB certified P/V valve for a Phase I system.

2. At least one pressure/vacuum (P/V) vent valve shall be installed on each tank vent. The maximum number of P/V vent valves allowed and P/V vent valve performance specifications are listed in the applicable Phase I EVR Executive Order. Vent lines may be manifold to minimize the number of P/V vent valves and potential leak sources, provided the manifold conforms to all applicable fire regulations.

Vapor Recovery Piping Configurations

NOTE: Vapor Return Piping shall meet the requirements specified in section 4.11 of CP-201.

1. Vapor Return and Vent Lines

   For facilities installed on or after April 1, 2003, all vapor return and vent lines shall be a minimum nominal internal diameter of 2 inches from the dispensers or the vent stacks to the first manifold. All lines after the first manifold and back to the underground storage tank shall have a minimum nominal internal diameter of 3 inches.

   Note: Facilities permitted by a local district prior to April 1, 2003 shall be required to meet the three inch diameter standard only upon facility modification which involves the addition, replacement, or removal of 50 percent or more of the buried vapor piping.

2. All vapor return lines shall have a minimum slope of 1/8 inch per foot from the dispenser riser to the riser of the UST. A slope of 1/4 inch or more per foot is recommended wherever feasible.

3. The dispenser shall be connected to the riser with either flexible or rigid material that is listed for use with gasoline. The dispenser-to-riser connection shall be installed so that any liquid in the lines will drain toward the storage tank. The internal diameter of the connector, including all fittings, shall not be less than one inch (1").

   Note: The dispenser-to-riser connection is defined as the piping connection between the dispenser piping and the inlet of the dispenser riser. A vapor shear valve may also be part of the riser connection.

4. There is no length restriction for the vapor return piping of the system as long as the system complies with the maximum pressure drop requirement, item 1 of the Vapor Collection section.

5. No product shall be dispensed from any fueling point at a GDF installed with the VST Phase II EVR System if there is a vapor line that is disconnected and open to the atmosphere.

6. No liquid condensate traps are allowed with this system.

Dispensers

1. For new installations and existing installations replacing dispensers or dispenser vapor piping, the minimum nominal internal diameter of dispenser vapor piping shall be one inch (1" ID). For existing installations, installed dispenser vapor piping may remain in use as long as the system complies with the maximum pressure drop requirement, item 1 of the Vapor Collection section.

2. Dispenser vapor piping shall be installed so that any liquid in the lines will drain toward the dispenser riser.

Phase I System

1. The Phase I system shall be an ARB-certified system that demonstrates compliance with the static pressure decay test criteria contained in TP-201.3 and Exhibit 4.

Maintenance Records

1. Each GDF operator owner shall keep records of alarms and maintenance performed at the facility. Such records shall be maintained on site in accordance with district requirements or policies. The records shall include alarm date and time, nature of the alarm, troubleshooting, maintenance or repair performed to validate and/or correct alarms, component, or system failures, date when maintenance or repair was conducted, name and Certified Technician Identification Number of individual conducting maintenance or test, affiliation, and telephone number. Additional information may be

required in accordance with local district requirements. An example of a GDF maintenance and alarm record is shown in Figure 2B-4.

2. Maintenance shall be conducted in accordance with the Scheduled Maintenance section of the ARB Approved Installation, Operation, and Maintenance Manual.

Vapor Recovery Equipment Defects

The following is deemed a defect for the affected fueling point(s) or system.

1. The fueling point shall be removed from service when more than 30% of a nozzle face seal is missing (e.g., a triangular or similar shape in which greater than 2.5 inches of the faceplate circumference is missing (accumulated)).

2. The fueling point shall be removed from service when more than 0.375 square inches of a nozzle vapor collection sleeve is missing (e.g., a rectangular shape of greater than nine/sixteenth (9/16) inches or more on each side, a circular shape of eleven/sixteenth (11/16) inches or more in diameter, or a triangular shape of seven/eighth (7/8) inches on the side.

3. The fueling point shall be removed from service when the total slit length in the convolutions exceeds 18 inches as determined by direct measurements.

4. The fueling point shall be removed from service when a hose is found to have greater than 175 ml of gasoline in the vapor side as determined by sections 6.1 to 6.5 of Exhibit 5. Note: Prior to draining gasoline from the vapor side of the VST hose, use VST tool P/N VST-STP-100 and plug the fuel spout. **Do not activate dispenser when draining gasoline from the vapor side of the VST hose.**

5. The fueling point shall be removed from service when VST system pressure drops exceeding the following conditions as determined by Methodology 1 of TP-201.4 and Exhibit 6:

   5.00 inches WC at a flow rate of 60 CFH of Nitrogen; and
   8.00 inches WC at a flow rate of 80 CFH of Nitrogen.

6. The fueling point shall be removed from service when the dispensing rate is greater than ten (10) gallons per minute (gpm) or less than five (5) gpm as determined by the applicable provisions of section 6 or 7 of Exhibit 5 or by direct observation for 30 seconds minimum at the maximum hand held position.

7. The fueling point shall be removed from service when any hose has a visible opening as determined by direct observation.

8. The fueling point shall be removed from service when the insertion interlock mechanism allows dispensing when the bellow is uncompressed as determined by direct observation or GDF-09 (see Vapor Recovery Defects List).

9. The fueling point shall be removed from service when the nozzle automatic liquid shut-off mechanisms malfunction in any manner as determined by EPO No. 26-F (See Vapor Recovery Defects List) or direct observation.

10. The fueling point shall be removed from service when any nozzle has a defective vapor valve as determined by Exhibit 7 or when the vapor valve has a leak rate that exceeds 0.07 cubic feet per minute at a pressure of two (2) inches WC as determined by TP-201.2B.

11. The fueling point or system shall be removed from service when any component required by this Executive Order is absent, installed improperly or disconnected as determined by direct observation.

Figure 2B-1
Model VST-EVR- NB Nozzle

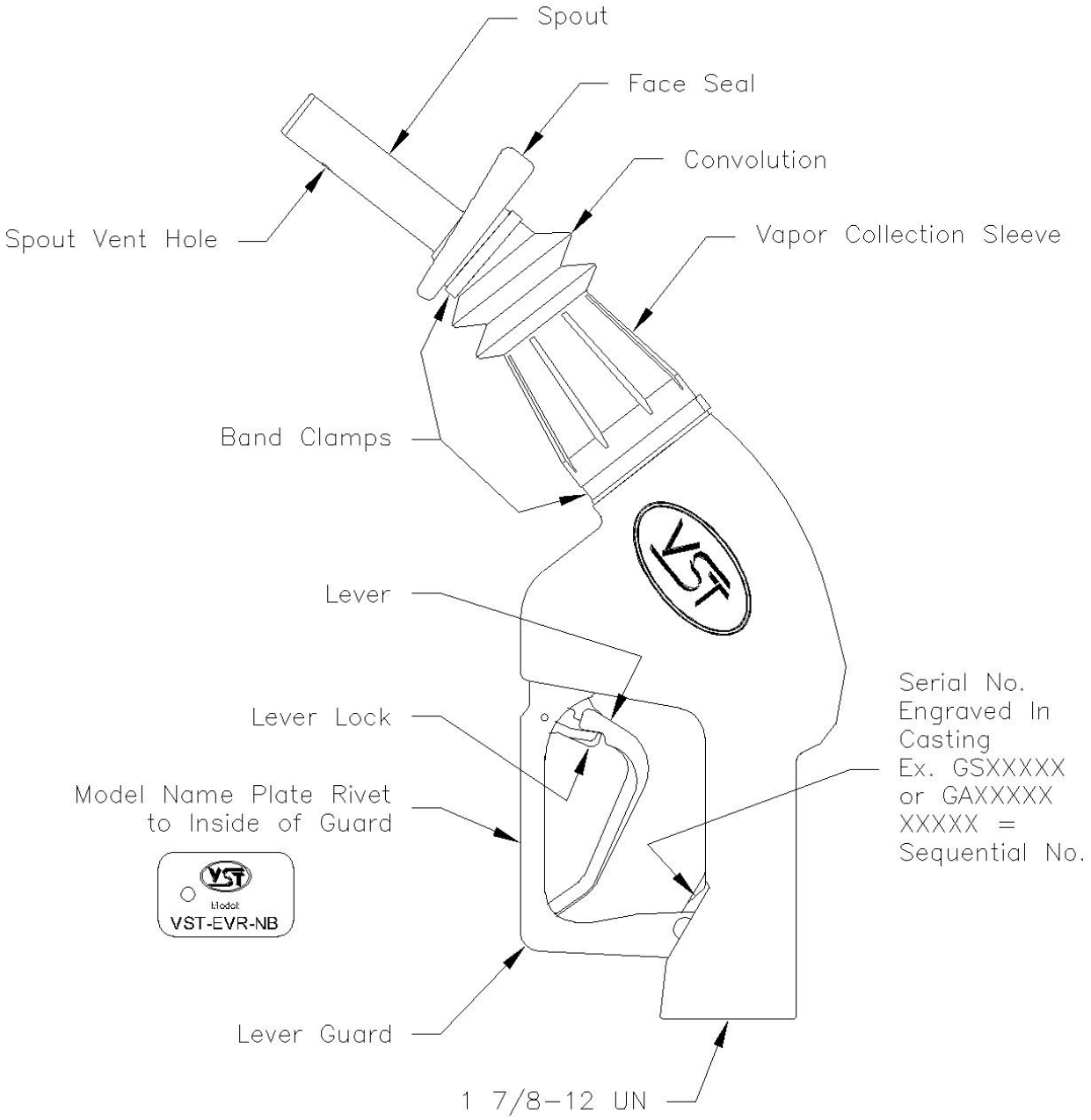

Figure 2B-2
Hirt VCS 100 Thermal Oxidizer
(shown in normal operation)

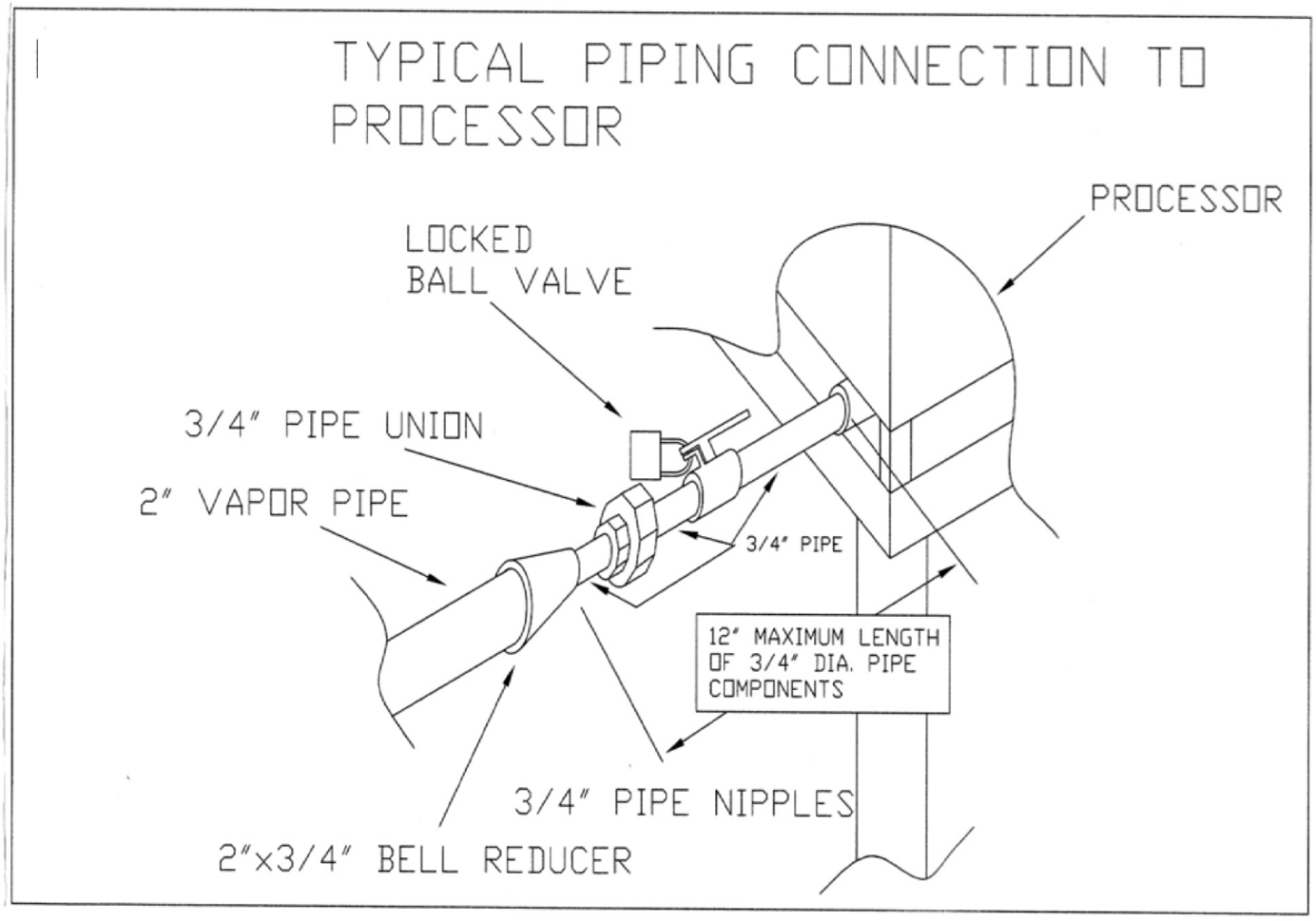

Figure 2B-3
Hirt VCS 100 Thermal Oxidizer
(3-Way Valve shown in normal operation)

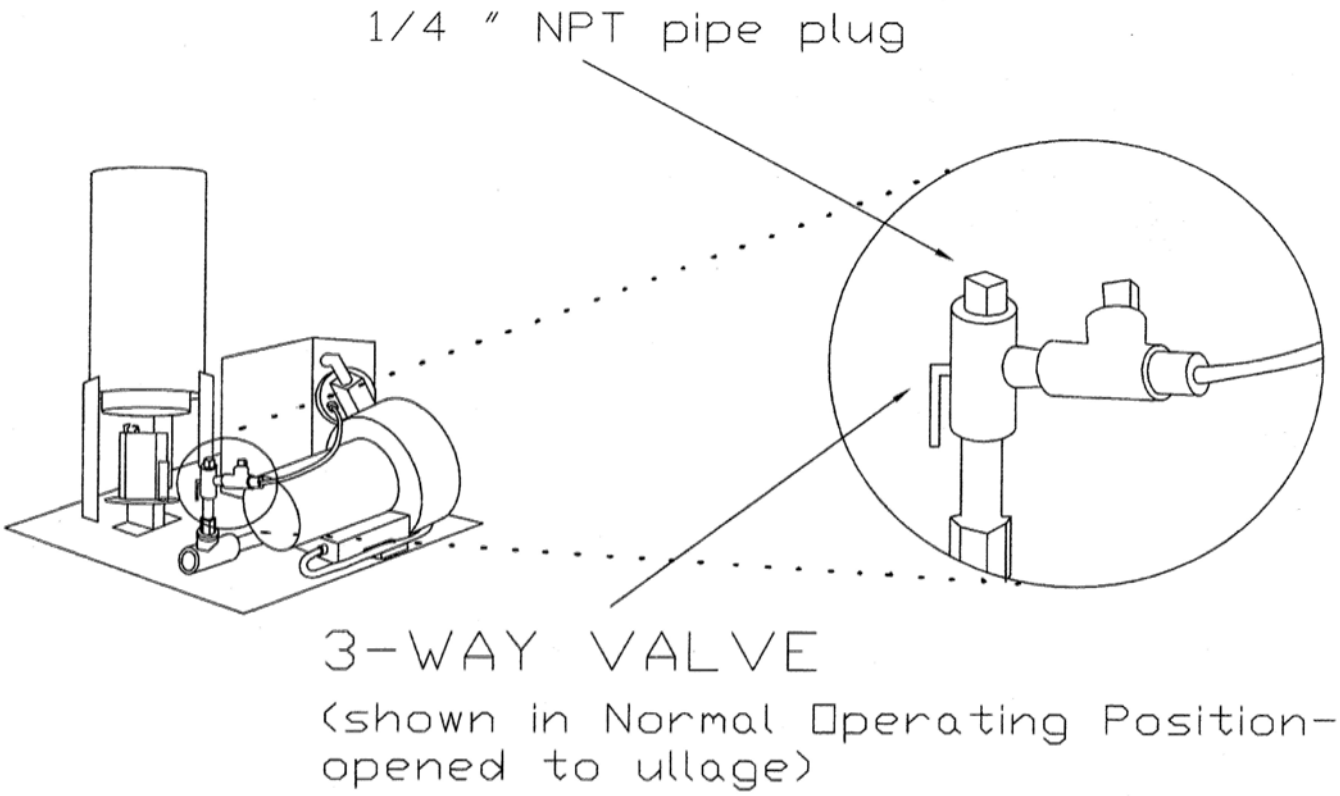

Figure 2B-4
Example of a GDF Maintenance Record and Alarm History Record

Date of Maintenance/ Test/Inspection/Failure/ alarm history (including date and time of maintenance call)	Repair Date To Correct Test Failure	Maintenance/Test/Inspection Performed and Outcome/Action Taken in Response to Alarm	Affiliation	Name and Technician ID Number of Individual Conducting Maintenance or Test	Telephone Number

Executive Order VR-205-A
VST Phase II EVR System with Hirt Thermal Oxidizer

Exhibit 3
Performance Standards and Specifications

Part I - VST Manufacturing Performance Standards and Specifications

The VST Phase II EVR System and all components shall be manufactured in compliance with the performance standards and specifications in CP-201 (amended May 25, 2006), as well as the requirements specified in this Executive Order. All components (Exhibit 1) shall be manufactured as certified; no change to the equipment, parts, design, materials or manufacturing process shall be made unless approved in writing by the Executive Officer or Executive Officer delegate. Unless specified in Exhibit 2 or in the ***ARB Approved Installation, Operation and Maintenance Manual***, the requirements of this section apply to the manufacturing process and are not appropriate for determining the compliance status of a gasoline dispensing facility.

1. NOZZLES

Every nozzle shall be tested at the factory. Every nozzle shall have affixed to it a card or label stating the performance specifications listed below, and a statement that the nozzle was tested to, and met, the following specifications.

a. The nozzle vapor valve leak rate shall not exceed 0.07 cubic feet per hour (CFH) at a pressure of +2 inches water column (WC) when tested in accordance with the latest version of TP-201.2B.

b. The nozzle automatic shut off feature is tested at all service clip settings as well as handheld in accordance with Underwriters Laboratories (UL) Standard 842.

c. The nozzle's primary and secondary shut-off mechanism shall be identical to the design that passed the California Department of Food and Agriculture Division of Measurement Standards Article 2 (DMS 6-6-97).

d. The nozzle is manufactured to the specifications that passed all tests conducted during the ARB certification for the following:

TP-201.2C	- Spillage from Phase II Systems
TP-201.2D	- Post Fueling Drips from Nozzles
TP-201.2E	- Gasoline Liquid Retention and Spitting in Nozzles and Hoses
TP-201.2J	- Nozzle Pressure Drop

e. The nozzle vapor collection boot is manufactured such that the force necessary to compress the nozzle bellows 0.5 inches is in the range of 10-16 pounds force.

f. The terminal end of each nozzle shall be manufactured in accordance with the specifications referenced in Section 4.7.3 of CP-201.

2. COAXIAL HOSES

a. Every coaxial hose is tested for continuity and pressure tests in accordance with UL Standard 330.

b. Every coaxial hose is manufactured to the standards and specifications that passed all tests conducted during the ARB certification for the following:

Exhibit 5 - Liquid Removal Test Procedure (for curb hoses)
TP-201.2J - Hose Pressure Drop (for curb and whip hoses)

3. BREAKAWAY COUPLINGS

a. Every breakaway coupling is tested for continuity and pressure tests in accordance with UL Standard 567.

b. Every breakaway coupling is manufactured to the standard that passed all tests conducted during the ARB certification for the following:

TP-201.2J - Breakaway Pressure Drop

Part II - Hirt Manufacturing Performance Standards and Specifications

The Hirt VCS 100 thermal oxidizer and all components shall be manufactured in compliance with the performance standards and specifications in CP-201 (amended May 25, 2006), as well as the requirements specified in this Executive Order. All components (Exhibit 1) shall be manufactured as certified; no change to the equipment, parts, design, materials or manufacturing process shall be made unless approved in writing by the Executive Officer or Executive Officer delegate. Unless specified in Exhibit 2 or in the ***ARB Approved Installation, Operation and Maintenance Manual***, the requirements of this section apply to the manufacturing process and are not appropriate for determining the compliance status of a gasoline dispensing facility.

1. HIRT VCS 100 THERMAL OXIDIZER

a. The VCS 100 processor is subjected to an assembly quality check.

b. The VCS 100 processor is visually inspected to verify identification, caution/warning, electrical, and other Agency labels are in place.

c. The VCS 100 processor is subjected to vacuum and pressure leak tests.

d. The VCS 100 processor is subjected to the following functional tests:

i. Power test;
ii. Verify set point of vacuum sensor switch;
iii. Verify operation of main vapor valve;
iv. Verify flow rate of pilot and main vapor valves; and
v. Dielectric test.

Executive Order VR-205-A
VST Phase II EVR System with Hirt Thermal Oxidizer

Exhibit 4
Required Items in Conducting TP-201.3[1,2]

The instructions below are required when conducting TP-201.3 for the VST Phase II EVR system with Hirt VCS 100 processor. The tester shall document that each step was followed as indicated below and shall include this page of the Exhibit with the submission of TP-201.3 test results. **See footnote regarding testing of pressure/vacuum vent valve**. Note that districts may require use of an alternate form to meet these requirements, provided the alternate form includes the same minimum parameters.

Hirt VCS 100 Thermal Oxidizer Installed

1. Prior to conducting TP-201.3, the ball valve on the inlet of the Hirt VCS 100 processor shall be Open (Open to UST Ullage), as shown in Figure 1. At the Hirt Indicator Panel, turn the Power Switch to the "Off" position.

2. After conducting TP-201.3, turn the Power Switch to the "On" position.

3. The ball valve on the inlet of the Hirt VCS 100 processor shall remain opened and locked.

Required Steps	Verification (please circle)
1. Inlet ball valve is open and Power Switch is in "Off" position before conducting TP-201.3?	Yes No
2. Power Switch is in "On" position after conducting TP-201.3?	Yes No
3. Inlet ball valve is in the open locked position after conducting TP-201.3?	Yes No

Test Company: _____ Facility Name:_____

_____
Print Name (Technician) Signature Date

_____
Technician Certification Number and Expiration Date
(ICC or District Training Certification, as applicable)

[1] Note: If the pressure/vacuum (P/V) vent valve is required to be tested by the local District, then the P/V vent valve shall be tested prior to conducting Exhibit 4.
[2] If Exhibit 8 Testing is to be conducted following completion of this test, at least 24 hours must have elapsed before conducting Exhibit 8.

Figure 1
Configuration of Hirt VCS 100 Thermal Oxidizer to Conduct TP-201.3

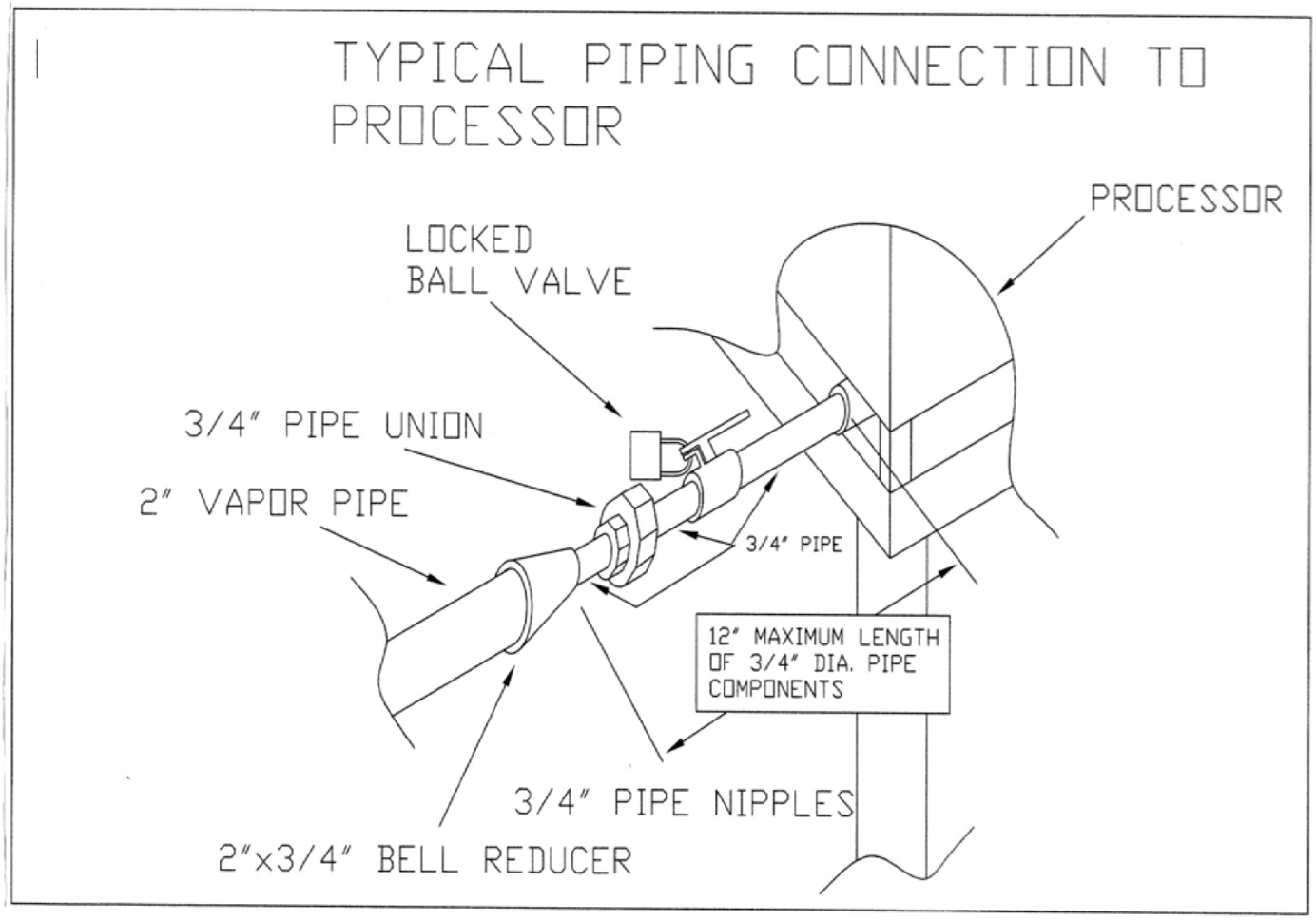

Executive Order VR-205-A
VST Phase II EVR System with Hirt Thermal Oxidizer

Exhibit 5
Liquid Removal Test Procedure

Definitions common to all certification and test procedures are in:

D-200 Definitions for Vapor Recovery Procedures

For the purpose of this procedure, the term "ARB" refers to the California Air Resources Board, and the term "Executive Officer" refers to the ARB Executive Officer or his or her authorized representative or designate.

1. PURPOSE AND APPLICABILITY

1.1 This procedure is used to quantify the removal rate of liquid from the vapor passage of a Phase II balance system hose equipped with a liquid removal device. This procedure provides a method to determine compliance with the liquid removal requirements specified in ARB Executive Orders VR-203 and VR-204 and any subsequent amendments or revisions.

2. PRINCIPLE AND SUMMARY OF TEST PROCEDURE

2.1 This test procedure provides two options to determine the compliance of liquid removal devices. Under option 1 (short version), liquid in the vapor path of a coaxial hose is drained and measured. If the volume of liquid drained equals or exceeds 25 ml, a liquid removal test is conducted. For those hoses with less than 25 ml drained, no further testing is required. Under option 2 (long version), all hoses are evaluated regardless of the volume of liquid drained. Option 2 includes a prewetting and wall adhesion step. Both options test the liquid removal device by introducing gasoline into the vapor path of the coaxial hose through the nozzle bellows. After 7.5 gallons of gasoline is dispensed, the amount of gasoline remaining in the hose is measured and the liquid removal rate is determined. The district shall specify which testing option is to be used.

Caution: When draining liquid from the vapor side of the hose, make sure the dispenser is not activated. The nozzle vapor valve is on the same stem as the fuel valve. To drain gasoline from the vapor side of the hose, the fuel lever must be engaged. If the dispenser is activated, gasoline in the fuel hose may be pressurized when engaging the fuel lever.

3. BIASES AND INTERFERENCES

3.1. Slits or tears in the hose or nozzle vapor path may bias the results towards compliance.

3.2. This test shall not be conducted on any fueling point where the hanging hardware is defective as identified in Exhibit 2.

3.3. Any spillage of gasoline invalidates the test for any volumes that are required to be measured or recorded.

3.4. A breach of the inner product hose may introduce additional gasoline into the outer vapor path resulting in a larger volume drained than introduced.

3.5. Not having the liquid extraction device (indicated by the mark on the outside of the house) at the bottom of the hose loop during liquid removal testing, as shown in Figure 1, will bias the results towards failure.

3.6. The test procedure requires the use of VST's nozzle spout plug, P/N VST-STP-100 as shown in Figure 2. This tool is used to plug the spout when draining liquid from the vapor side of the hose. Not plugging the spout may bias the results towards failure. Nicks, cuts, or tears in the plug o-rings will bias the results towards failure.

3.7. Dispensing rates not between 6.0 and 10.0 gallons per minute (GPM) invalidates the test.

4. SENSITIVITY, RANGE, AND PRECISION

4.1 The range of measurement of the liquid removal rate is dependent upon the range of the graduated cylinder used for testing.

4.2 To ensure precision, graduated cylinder readings shall be measured at the liquid level meniscus.

5. EQUIPMENT

5.1. Nozzle Spout Plug: Use VST's spout plug, P/N VST-STP-100 (Figure 2).

5.2. Stopwatch. Use a stopwatch accurate to within 0.2 seconds.

5.3. Funnels. Large and small gasoline compatible, non-breakable, funnels with dimensions similar to those as shown in Figure 3, or equivalent.

5.4. Graduated Cylinders. Gasoline compatible, non-breakable 0-25ml, 0-100ml, 0-250 ml, and 0-500 ml graduated cylinders with stable base plates. The 25ml cylinder may be necessary to quantify volumes of liquid less than 20 ml.

5.5. Gasoline Test Tank. (Optional) A portable tank, meeting fire safety requirements for use with gasoline, may be used to receive the gasoline dispensed during testing. The tank shall have sufficient volume so that at least 10.0 gallons may be dispensed prior to activating the primary shutoff mechanism of the nozzle. **When using a gasoline test tank, ensure that a ground strap is used and that it is properly connected to an acceptable ground.** To minimize testing-related emissions, vehicle refueling events should be used for this procedure whenever feasible.

5.6. Traffic Cones. Use traffic cones to encircle the area where testing is conducted.

5.7. Field Data Sheet. Use the appropriate data sheet to record liquid removal test information. Forms 1 and 2 serve as examples; districts may require modified versions.

5.8. Gasoline Container. Use a portable fuel container equipped with a tight fitting cap, of at least 1.0 gallon capacity.

NOTE: THIS TEST PROCEDURE PROVIDES TWO OPTIONS TO DETERMINE COMPLIANCE OF LIQUID REMOVAL DEVICES. THE DISTRICT SHALL SPECIFY WHICH TESTING OPTION IS TO BE USED

6. OPTION 1 (SHORT VERSION)

PRE-TEST PROCEDURE

6.1 Verify that the 500 ml graduated cylinder is empty. Position the large funnel into the graduated cylinder.

6.2 Remove the nozzle from the dispenser. **Do not activate dispenser!** Install VST's spout plug, P/N VST-STP-100 in the tip of the spout (Figure 2). Carefully tilt the spout into the funnel/graduated cylinder assembly.

6.3 Lower the nozzle and funnel/graduated cylinder assembly as close to the ground as possible. "Walk out" the hose while keeping the nozzle lowered and hose fully extended. The hose shall slope downward from the dispenser toward the nozzle.

6.4 **Do not activate dispenser!** Open the nozzle's vapor check valve by compressing the bellows and engaging the fuel lever. Allow 20 seconds for all liquid to drain. Use caution to avoid spillage.

6.5 Remove VST's spout plug and return the nozzle to the dispenser and measure the volume of liquid drained. If the volume drained is less than 200 ml, transfer the liquid into an appropriately sized graduated cylinder. For example, if 40 ml of liquid was drained, use the 100 ml graduated cylinder to take the measurement.

6.6 Record the amount of liquid drained on Form 1 ("PRE-TEST").

6.7 If the volume drained is greater than or equal to 25 ml, proceed to Section 6.8 of the procedure. Hoses with greater than 25 ml drained are considered to be pre-wetted. If the amount drained is less than 25 ml, proceed to the next nozzle/hose to be evaluated and repeat Section 6.1-6.6

TEST PROCEDURE (FOR HOSES WITH GREATER THAN 25 ML DRAINED)

6.8 Pour 150 ml to 175 ml of gasoline into the 250 ml graduated cylinder. Measure and record this volume on Form 1 (VI).

6.9 Remove the nozzle from the dispenser and position the nozzle upright so that the

spout is in a vertical position. **Do not activate dispenser!**

6.10 Open the nozzle's vapor check valve by compressing the bellows and engaging the fuel lever. Carefully insert the stem of the small funnel between the bellows and nozzle spout.

6.11 Pour the measured volume into the vapor path of the hose. Use caution not to spill the gasoline. Remove the small funnel after the gasoline has been introduced.

6.12 Insert the nozzle into a vehicle or test tank fill pipe.

6.13 Find the mark on the outside of the hose which indicates the location of the liquid pick-up device. Ensure the mark is at the bottom of the hose loop when dispensing as shown in Figure 1. This can be accomplished by lifting up the back of the hose, adjusting nozzle position, or adjusting the test tank position.

6.14 Dispense 7.5 (±0.5) gallons at the highest possible flow rate by holding the nozzle lever in the maximum handheld position. Use a stopwatch to measure the time elapsed while dispensing. Record the volume of fuel dispensed (G) and the elapsed time (T) on Form 1. Return nozzle to the dispenser.

6.15 Calculate the dispensing rate using the equation below. If the dispensing rate is not between 6.0 and 10.0 gallons per minute (GPM), the test results are invalid.

$$GPM = 60 \times \left(\frac{G}{T}\right)$$

Where:

GPM	=	dispensing rate (in gallons per minute)
G	=	gallons of fuel dispensed
T	=	number of seconds required to dispense

6.16 Using the 250 ml graduated cylinder and large funnel, carefully drain the remaining liquid from the vapor path of the hose as described in Section 6.1 through 6.5 **(make sure dispenser is not activated and spout plug is installed before draining liquid!)**. Record this quantity on Form 1 (VF).

6.17 Use Equation 9.1 to calculate the liquid removal rate for all the applicable hoses tested.

6.18 If the liquid removal rate is less than 5.0 ml/gallon, but greater than or equal to 4.5 ml/gallon, repeat the test two additional times and average the three results.

7. OPTION 2 (LONG VERSION)

PRETEST PROCEDURE

7.1 Carefully pour 150 ml of gasoline into the 250 ml graduated cylinder.

7.2 Remove the nozzle from the dispenser. **Do not activate dispenser!** Install VST's spout plug, P/N VST-STP-100 in the tip of the spout as shown in Figure 2. Position the nozzle upright so that the spout is in a vertical position.

7.3 Open the nozzle's vapor check valve by compressing the bellows and engaging the fuel lever. Carefully insert the stem of the small funnel between the bellows and nozzle spout.

7.4 Pour the gasoline from the 250 ml graduated cylinder into the vapor path of the hose. Use caution not to spill the gasoline. Remove the small funnel after the gasoline has been introduced.

7.5 Verify that the 500 ml graduated cylinder is empty. Position the large funnel into the graduated cylinder.

7.6 Carefully tilt the spout into the funnel/graduated cylinder assembly. **Make sure VST's spout plug is installed and the dispenser is deactivated.**

7.7 Lower the nozzle and funnel/graduated cylinder assembly as close to the ground as possible. "Walk out" the hose while keeping the nozzle lowered and hose fully extended. The hose shall slope downward from the dispenser toward the nozzle.

7.8 Open the nozzle's vapor check valve by compressing the bellows and engaging the fuel lever. Allow 20 seconds for all liquid to drain. Use caution to avoid spillage. If necessary, drain full graduated cylinders into a portable gas can until the hose is empty.

7.9 Remove VST's spout plug and return the nozzle to the dispenser.

TEST PROCEDURE

7.10 Pour 150 ml to 175 ml of gasoline into the 250 ml graduated cylinder. Measure and record this volume on Form 2 (VI).

7.11 Remove the nozzle from the dispenser. **Do not activate dispenser!** Position the nozzle upright so that the spout is in a vertical position.

7.12 Open the nozzle's vapor check valve by compressing the bellows and engaging the fuel lever. Carefully insert the stem of the small funnel between the bellows and nozzle spout.

7.13 Pour the measured volume into the vapor path of the hose. Use caution not to spill the gasoline. Remove the small funnel after the gasoline has been introduced.

7.14 Insert the nozzle into a vehicle or test tank fill pipe.

7.15 Find the mark on the outside of the hose which indicates the location of the liquid pick-up device. Ensure the mark is at the bottom of the hose loop when dispensing

as shown in Figure 1. This can be accomplished by lifting up the back of the hose, adjusting nozzle position, or adjusting the test tank position.

7.16 Dispense 7.5 (±0.5) gallons at the highest possible flow rate by holding the nozzle lever in the maximum handheld position. Use a stopwatch to measure the time elapsed while dispensing. Record the volume of fuel dispensed (G) and the elapsed time (T) on Form 2. Return nozzle to the dispenser.

7.17 Calculate the dispensing rate using the equation below. If the dispensing rate is not between 6.0 and 10.0 gallons per minute (GPM), the test results are invalid.

$$GPM = 60 \times \left(\frac{G}{T}\right)$$

Where:

GPM	=	dispensing rate (in gallons per minute)
G	=	gallons of fuel dispensed
T	=	number of seconds required to dispense

7.18 Using the 250 ml graduated cylinder and large funnel, carefully drain the remaining liquid from the vapor path of the hose as described in Section 7.5 through 7.8 **(make sure dispenser is deactivated and spout plug is installed before draining liquid!)**. Record this quantity on Form 2 (VF).

7.19 Open the nozzle's vapor check valve by compressing the bellows and engaging the fuel lever. **Do not activate dispenser!** Carefully insert the stem of the small funnel between the bellows and nozzle spout

7.20 Use the 250 ml graduated cylinder and small funnel to pour 150 ml of gasoline into the vapor passage of the hose. Dispense no gasoline.

7.21 Using the 250 ml graduated cylinder and large funnel, completely drain the gasoline from the vapor passage back into the graduated cylinder as described in Section 7.5 through 7.9 **(make sure dispenser is deactivated and spout plug is installed before draining liquid!)**.

7.22 Subtract the volume drained (value from Section 7.21) from the volume added (value from Section 7.20). This value represents the volume of gasoline lost due to wall adhesion. The purpose of the wall adhesion value is to quantify the amount of gasoline lost to evaporation from transfer to and from the graduated cylinders and adhesion of liquid to vapor passage surfaces in previous measurements. Record this quantity on Form 2 (VW).

7.23 Use Equation 9.2 to calculate the liquid removal rate for all the applicable hoses tested.

7.24 If the liquid removal rate is less than 5.0 ml/gallon, but greater than or equal to 4.5 ml/gallon, repeat the test two additional times and average the three results.

8. POST TEST PROCEDURES

8.1. Empty all containers and return any excess gasoline to the underground storage tank.

8.2. Remove the traffic cones from the testing area.

9. CALCULATING RESULTS

9.1 If using OPTION 1(short version), the liquid removal rate shall be calculated as follows:

$$VR = \frac{VI - VF}{G}$$

Where:

VR	=	Gasoline removed per gallon dispensed, milliliters/gallon
VI	=	Total initial volume poured into hose vapor passage, milliliters
VF	=	Volume of gasoline remaining in the hose vapor passage after dispensing, milliliters
G	=	Total dispensed, gallons

9.2 If using OPTION 2 (long version), the liquid removal rate shall be calculated as follows:

$$VR = \frac{(VI - VW) - VF}{G}$$

Where:

VR	=	Gasoline removed per gallon dispensed, milliliters/gallon
VI	=	Total initial volume poured into hose vapor passage, milliliters
VW	=	Volume of liquid lost due to wall adhesion, milliliters
VF	=	Volume of gasoline remaining in the hose vapor passage after dispensing, milliliters
G	=	Total dispensed, gallons

10. REPORTING RESULTS

10.1. Record all applicable liquid removal rate information on the appropriate form as shown in Form 1 and 2. Districts may require the use of alternate forms provided that the alternate forms include the same parameters as identified in Forms 1 and 2.

10.2. If the calculated liquid removal rate is greater than or equal to 5 milliliters/gallon, the liquid removal device has demonstrated compliance.

10.3. If the calculated liquid removal rate is less than 5 milliliters/gallon, the liquid removal

device is not in compliance.

11. ALTERNATIVE TEST PROCEDURES

This procedure shall be conducted as specified. Modifications to this test procedure shall not be used to determine compliance unless prior written approval has been obtained from the Executive Officer, pursuant to Section 14 of Certification Procedure CP-201.

FIGURE 1
Position of Liquid Removal Device
When Conducting Liquid Removal Testing

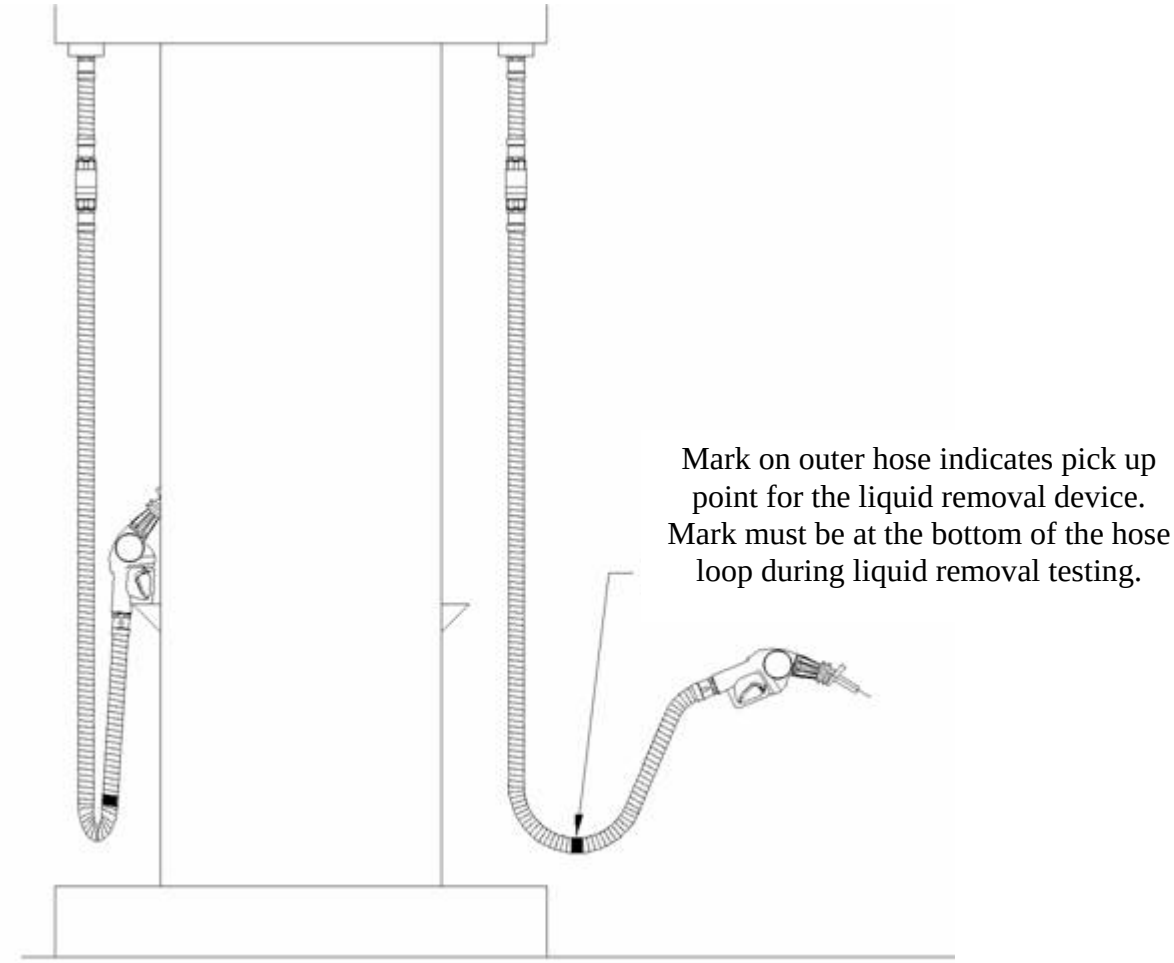

FIGURE 2
VST Nozzle Spout Plug P/N VST-STP-100

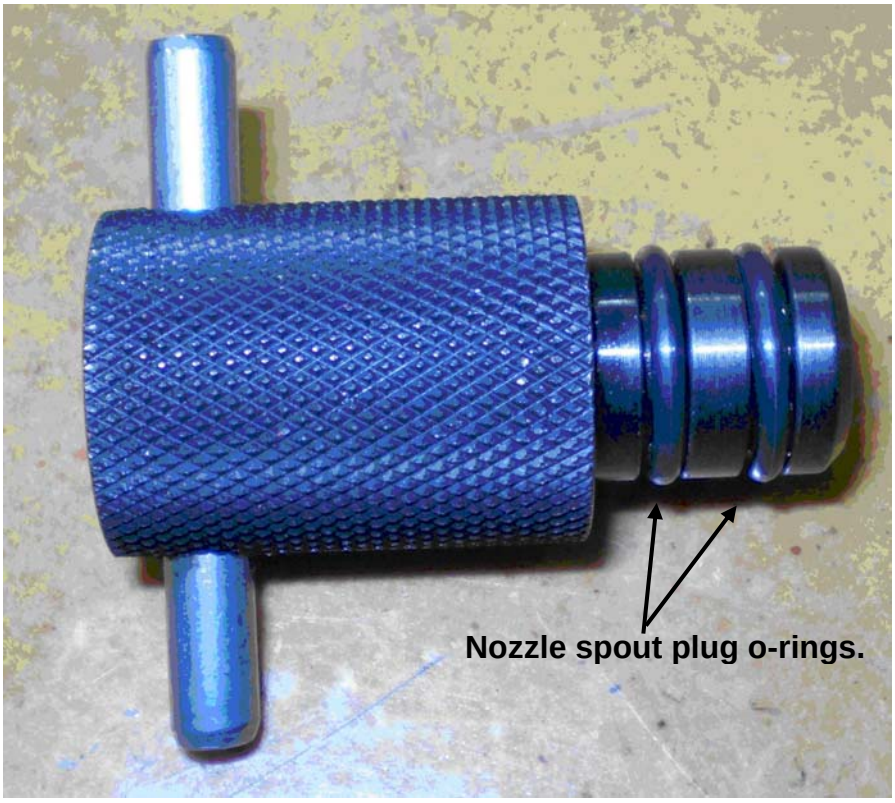

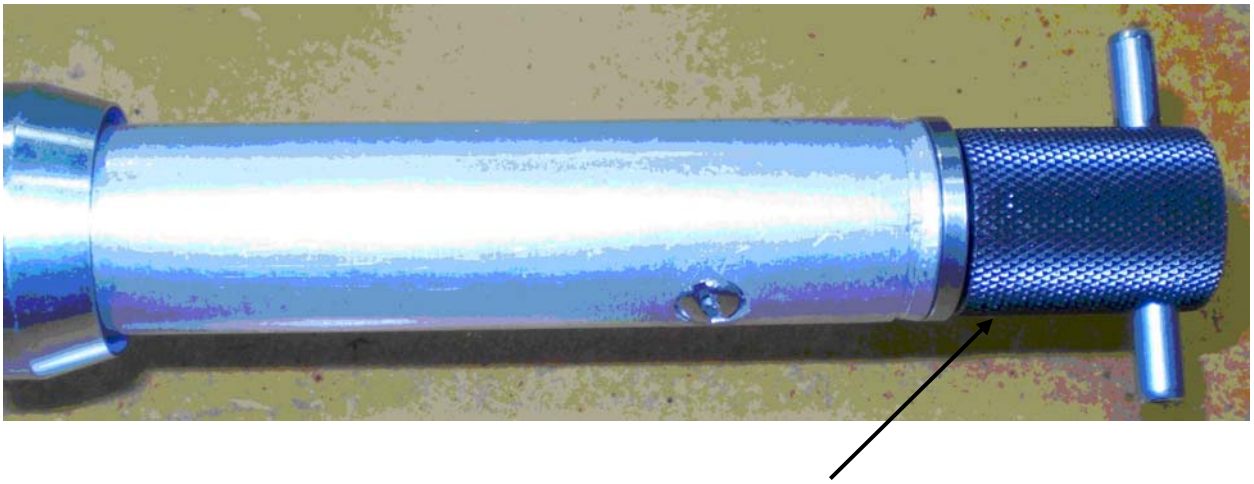

Plug properly inserted into nozzle spout.
Both plug o-rings seated into nozzle spout.

FIGURE 3
Recommended FUNNEL SPECIFICATIONS

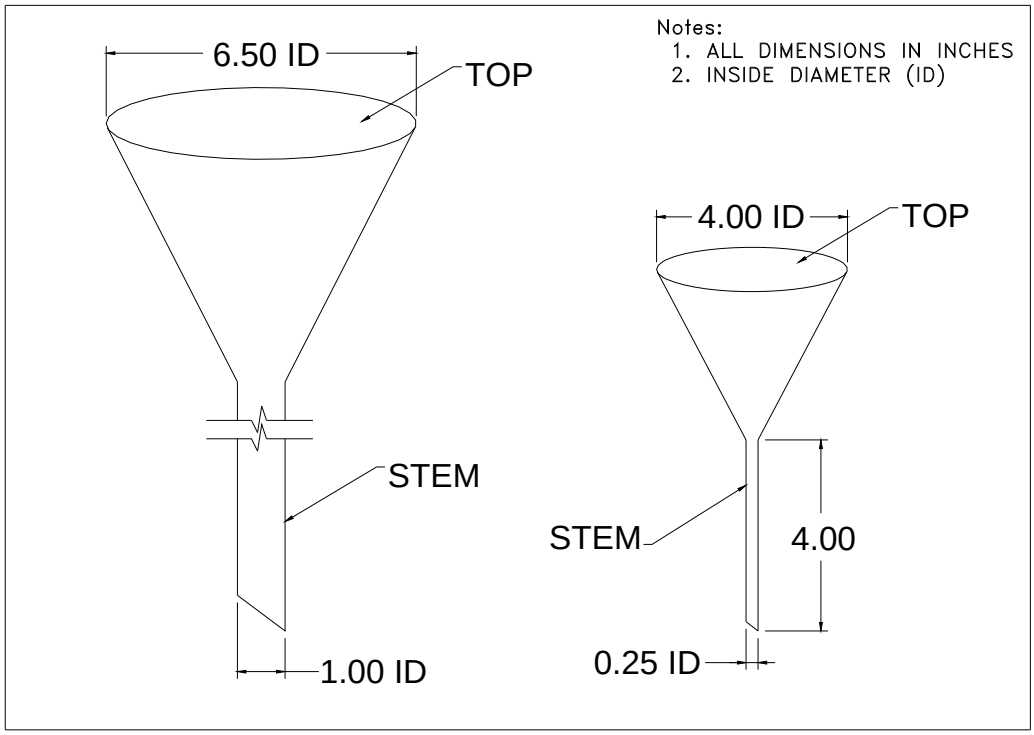

FORM 1: LIQUID REMOVAL TEST DATA SHEET (OPTION 1)

Facility Name & Address	Facility Representative & Title
	Phone No.

Test Date	
A/C or Permit No.	
Testing Company	
Tester Name	
VST Training Cert # (if applicable)	
Inspector Name	

GENERAL INFORMATION				PRE-TEST	TEST RUN					VR=(VI-VF)/G
Dispenser Number	Product Grade	Make & Model of Hose	Serial Number of Hose	Volume Drained From Hose in mL	Volume Poured Into Hose in mL (VI)	Gallons Dispensed (G)	Seconds to Dispense (T)	Dispensing Rate (60*(G/T))	Volume Remaining in mL (VF)	Liquid Removal Rate (mL/gal)

FORM 2: LIQUID REMOVAL TEST DATA SHEET (OPTION 2)

Facility Name & Address	Facility Representative & Title
	Phone No.

Test Date	
A/C or Permit No.	
Testing Company	
Tester Name	
VST Training Cert # (if applicable)	
Inspector Name	

GENERAL INFORMATION				PRE-TEST	TEST RUN					VR=((VI-VW)-VF)/G
Dispenser Number	Product Grade	Make & Model of Hose	Serial Number of Hose	Volume Poured into Hose in mL (VI)	Gallons Dispensed (G)	Seconds to Dispense (T)	Dispensing Rate (60*(G/T))	Volume Remaining in mL (VF)	Volume Lost to Wall Adhension in mL (VW)	Liquid Removal Rate (mL/gal)

Executive Order VR-205-A
VST Phase II EVR System with Hirt Thermal Oxidizer

Exhibit 6
Required Items in Conducting TP-201.4

The instructions below are required when conducting TP-201.4 for the VST Phase II EVR System with Hirt Thermal Oxidizer. The tester shall document that each step was followed as indicated below and shall include this page of the Exhibit with the submission of TP-201.4 test results. Note that districts may require use of an alternate form to meet these requirements, provided the alternate form includes the same minimum parameters.

The VST Model VST-EVR-NB nozzle incorporates a lever-actuated vapor valve. The vapor valve is on the same stem as the fuel valve. When conducting TP-201.4, the nozzle lever must be actuated to open the vapor valve and allow vapor to flow from the nozzle to the underground storage tank. The following steps must be taken when conducting Methodology 1 of TP-201.4:

1. The dispenser shall not be activated. If the dispenser is activated, gasoline in the fuel hose may be pressurized when engaging the fuel lever.
2. The Hirt VCS 100 Thermal Oxidizer shall be turned off. At the Hirt Indicator Panel, turn the Power Switch to the “Off” position.
3. Prior to inserting the VST EVR nozzle into the fillpipe of the Dynamic Back Pressure Test Unit in step 7.1 of TP-201.4, completely drain any gasoline in the nozzle and vapor path of the hose. The dispenser must be deactivated and the nozzle lever and bellows shall be fully engaged.
4. When flowing nitrogen per step 7.1.2, fully engage the nozzle lever to allow vapor flow from the nozzle to the UST.
5. After conducting TP-201.4, turn the Hirt VCS 100 Power Switch to the “On” position.

Required Steps	Verification (please circle)
1. Were all dispensers deactivated?	Yes No
2. Was VCS 100 Power Switch turned to “Off” position?	Yes No
3. Were all nozzles and hoses completely drained of gasoline prior to inserting nozzle into Dynamic Back Pressure Unit?	Yes No
4. Were all nozzle levers fully engaged when conducting flow test?	Yes No
5. Was VCS 100 Power Switch turned to “On” position after conducting TP-201.4?	Yes No

Test Company: _____ Facility Name:_____

_____
Print Name (Technician) Signature Date

_____
Technician Certification Number and Expiration Date
(ICC or District Training Certification, as applicable)

Executive Order VR-205-A
VST Phase II EVR System with Hirt Thermal Oxidizer

Exhibit 7
Nozzle Bag Test Procedure

Verification of the integrity of the VST nozzle vapor valve shall be performed on installed nozzles by use of the following test.

1. Seal nozzle(s) at the gasoline dispensing facility (GDF) in a plastic bag, using tape or other means to secure the bag around the base of the nozzle (see Figure 1). Any plastic bag large enough to enclose the nozzle and having a thickness of no greater than 2 mils can be used. In California, 12" x 20" x 2 mil thick bags are available from the Air Resources Board by calling 800-952-5588.

2. Observe the bagged nozzle(s) for 30 seconds.

3. Any nozzle where the bag can be seen visually expanding or collapsing has a defective vapor valve and is not in compliance with Exhibit 2.

4. Record the test results on the "Nozzle Bag Test Results" form provided in this Exhibit. Districts may require use of an alternate form, provided that the alternate form includes the same minimum parameters.

5. Remove the bags from all the nozzles and return the nozzles to the dispenser holsters.

Figure 1
Example of Bagged Nozzle

NOZZLE BAG TEST RESULTS

SOURCE INFORMATION		TEST COMPANY INFORMATION	
Facility (DBA)/Site Address:	Facility Representative/Title:	Test Company Name	# of Nozzles:_____ # Nozzles Tested: _____ # Nozzles Passed: _____ # Nozzles Failed: _____ # Nozzles not Tested: _____
Print Name	Print Name	Print Name of Tester	
Street Address	Title ( )	Street Address	
City Zip	Phone No.	City Zip	
District Inspector:	☐ P/O ☐ S/A ☐ A/C Number:	Date of Test:	Time of Test:

Dispenser	Gas Grade	Nozzle Type	Bag Expanded or Collapsed after 30 Seconds
			☐ Yes ☐ No
			☐ Yes ☐ No
			☐ Yes ☐ No
			☐ Yes ☐ No
			☐ Yes ☐ No
			☐ Yes ☐ No
			☐ Yes ☐ No
			☐ Yes ☐ No
			☐ Yes ☐ No
			☐ Yes ☐ No
			☐ Yes ☐ No
			☐ Yes ☐ No
			☐ Yes ☐ No
			☐ Yes ☐ No
			☐ Yes ☐ No
			☐ Yes ☐ No

Executive Order VR-205-A
VST Phase II EVR System with Hirt Thermal Oxidizer

Exhibit 8
Hirt VCS 100 Processor
With Indicator Panel
Operability Test Procedure

Definitions common to all certification and test procedures are in:

D-200 Definitions for Vapor Recovery Procedures

For the purpose of this procedure, the term "ARB" refers to the California Air Resources Board, and the term "ARB Executive Officer" refers to the Executive Officer of the ARB or his or her authorized representative or designate.

1. PURPOSE AND APPLICABILITY

This test procedure verifies the operational status of the Hirt VCS 100 Processor and Indicator Panel.

The station may remain open (normal fuel dispensing) while conducting this procedure.

2. PRINCIPLE AND SUMMARY OF TEST PROCEDURE

The Hirt VCS 100 Processor is designed to activate (e.g. thermally oxidize vapors) when the underground storage tank (UST) ullage pressure exceeds a nominal -0.40 inches water column ("w.c.). Processor activation will be verified by exposing the processor's internal vacuum sensor/switch to an atmospheric pressure input. The processor should activate and the Indicator Panel Processing lamp should light.

3. BIASES AND INTERFERENCES

3.1 This test is only valid when total ullage is 70% or less than capacity of GDF storage tanks.

3.2 At least 24 hours must have elapsed after any tests that introduce air and/or nitrogen into the vapor spaces, such as, but not limited to TP-201.3 (including Exhibit 4), TP-201.4 (including Exhibit 6) and Exhibit 5.

3.3 There shall be no Phase I bulk product deliveries into or out of the storage tank(s) within the three (3) hours prior to the test or during performance of this test procedure.

3.4 Processor should be inactive (i.e. powered but not processing gasoline vapor).

4. EQUIPMENT

4.1 Hand tools: 5/16" nut driver or equivalent, 3/8" open end wrench.

4.2 Stopwatch: Use a stopwatch with an accuracy of ±0.2 seconds.

4.3 Teflon pipe tape.

5. TEST PROCEDURE

5.1 System Status Check: Locate Hirt Indicator Panel and verify that the green lamp on the POWER switch is lit, to be sure power is ON. Record on Form 1. If the Power switch is not lit, the processor does not meet the Exhibit 2 Hirt VCS 100 Thermal Oxidizer specifications and no testing shall be conducted.

Indicator Panel Face

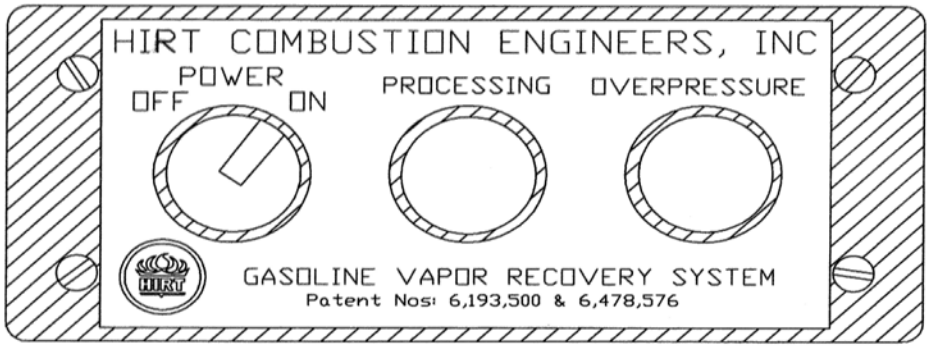

5.2 Check green PROCESSING lamp on Indicator Panel. Is the green PROCESSING lamp on? Record on Form 1. If so, then wait until PROCESSING lamp is extinguished before proceeding to step 5.3, to meet BIAS condition 3.4.

5.3 Forced Processor Operation: Turn POWER to processor OFF at Indicator Panel.

CAUTION: Processor components, such as Shell, Stack, Burner, and Weather Cover can be Hot! Use care when handling processor or removing its parts.

5.4. Remove screw from Weather Cover with 5/16” nut driver and remove Weather Cover from Outer Stack.

5.5 Remove (4) screws holding Shell to Base with 5/16” nut driver and then remove Shell.

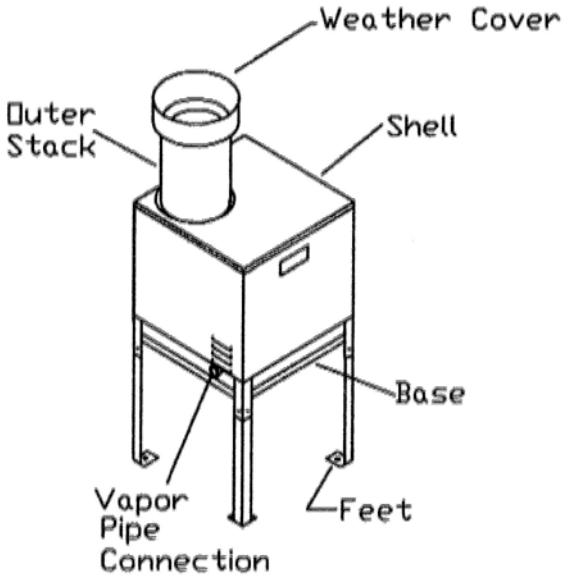

5.6 Locate 3-Way Valve on tubing leading to Vacuum Sensor/Switch. The 3-Way Valve handle should be pointing down, in the Normal Operating Position – Opened to UST Ullage. Remove the 1/4" NPT pipe plug from 3-Way Valve with 3/8" wrench.

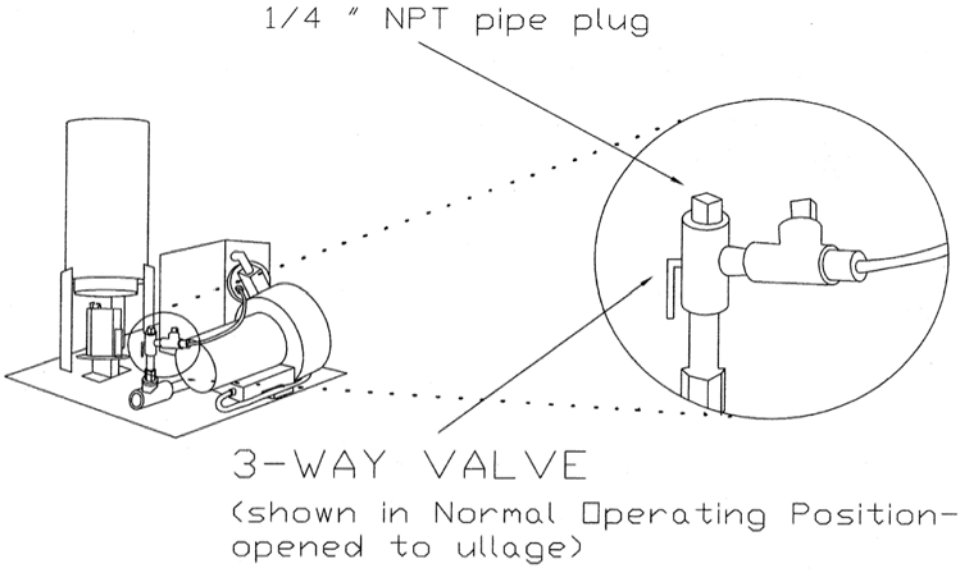

5.7 Turn 3-Way Valve handle to the up position.

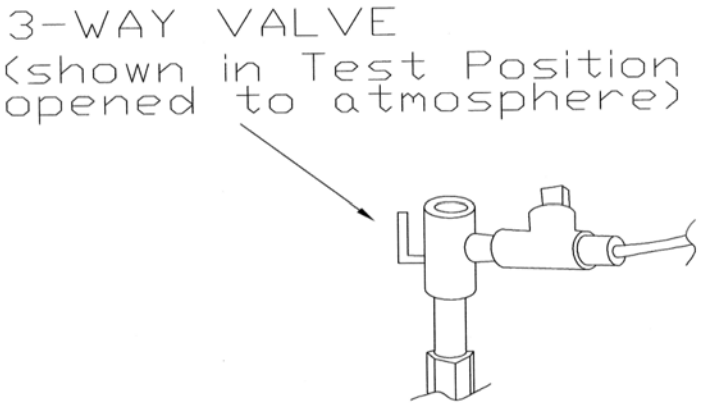

5.8 Turn POWER to processor ON at Indicator Panel, and verify that green lamp on POWER switch is lit. Start the stopwatch.

5.9 Verify green PROCESSING lamp on the Indicator Panel lights within 3 minutes. Record on Form 1. If the Processing lamp is on, processor meets the Exhibit 2 Processor specifications. If the Processing lamp is not on within 3 minutes, the processor does not meet the Exhibit 2 Processor specifications and needs technical service.

5.10 Verify the OVERPRESSURE lamp on the Indicator Panel lights within sixty two (62) minutes. Record on Form 1. If the OVERPRESSURE lamp is on, processor meets the Exhibit 2 Processor specifications. If the OVERPRESSURE lamp is not on within sixty two (62) minutes, the processor does not meet the Exhibit 2 Processor specifications and needs technical service.

5.11 Turn POWER to processor OFF at Indicator Panel.

5.12 Turn 3-Way Valve handle back down to Normal Operating Position. Reinstall 1/4" NPT plug (with Teflon pipe tape) and tighten ¼ turn past snug. Reinstall Shell and Weather Cover.

5.13 Turn POWER to processor ON at Indicator Panel. Testing is completed.

6. REPORTING

Record all results on Form 1. Districts may require the use of an alternate Form, provided it includes the same minimum parameters as identified in Form 1.

FORM 1:
HIRT VCS 100 PROCESSOR OPERABILITY TEST

DATE OF TEST:

SERVICE COMPANY NAME	SERVICE COMPANY'S TELEPHONE
SERVICE TECHNICIAN	HIRT TECHNICIAN CERTIFICATION #(as applicable) CC or DISTRICT TRAINING CERTIFICATION (as applicable)
STATION NAME	DISTRICT PERMIT #

STATION ADDRESS	CITY	STATE ZIP

Was TP-201.3 (Including Exhibit 4) conducted in the last 24 hours?	Yes ____ No ____
Was TP-201.4 (Including Exhibit 6) conducted in the last 24 hours?	Yes ____ No ____
Was Exhibit 5 conducted in the last 24 hours?	Yes ____ No ____
Was there a fuel delivery within the last 3 hours?	Yes ____ No ____
The % ullage of GDF storage tank(s) is _____ gallons.	

STEP 5.1	**Is POWER switch lit?**	YES ☐ NO ☐
STEP 5.2	**Is PROCESSING lamp ON?** If "YES", test cannot be performed until lamp goes off.	YES ☐ NO ☐
STEP 5.9	**Time for PROCESSING Lamp to Light? _____ minutes** **Did PROCESSING Lamp light within three (3) minutes?**	YES ☐ NO ☐
STEP 5.10	**Time for OVERPRESSURE Lamp to Light? _____ minutes** **Did OVERPRESSURE Lamp light within sixty two (62) minutes?**	YES ☐ NO ☐

Executive Order VR-205-A
VST Phase II EVR System with Hirt Thermal Oxidizer

Exhibit 9
Warranty

VST PHASE II EVR SYSTEM WARRANTY

This limited warranty is given by Vapor Systems Technologies, Inc. (hereinafter VST) to the purchaser of systems or products manufactured by it. VST products are warranted to be free from defect in material and workmanship under normal use, service, proper installation, and maintenance practices per manufacturer specifications.

VST warrants the materials and workmanship to be free from defects in accordance with the following provisions:

- This warranty will not apply to any products or systems that have:
    - been subject to misuse, abuse, tampering, negligence, accident, or drive off;
    - been misapplied, improperly installed, or not installed per VST's instructions or specifications;
    - been modified, altered, rebuilt or repaired by unauthorized persons or outside the criteria of VST specifications;
    - not been properly maintained in accordance with the system's or product's periodic maintenance schedule; or
    - been subject to damage resulting from acts of God.
- Use of VST products on non-UL systems or use that falls outside intended field of use voids any stated or implied warranty.
- The warranty for the material and workmanship of the systems or products extends to the purchaser and the duration of this warranty is TWELVE (12) MONTHS from the time of installation up to a maximum of EIGHTEEN (18) MONTHS from date of shipment, provided the Product Warranty Card is returned to VST. If the Product Warranty Card is not returned to VST, the warranty period is TWELVE (12) MONTHS from the date of shipment.
- VST warrants the material and workmanship of spare and/or replacements parts for NINETY (90) DAYS from the date of shipment.
- In the event of a warranty claim, the purchaser/distributor must obtain a copy of a Return Goods Authorization (RGA) from VST prior to returning product so as to insure proper processing. All warranty claim returns must be shipped freight prepaid by the purchaser/distributor.
- Warranty status will be determined upon inspection at VST's facility within THIRTY (30) DAYS of receipt of the warranted products. All returned merchandise deemed *Not Under Warranty*; will be held by VST for SEVEN (7) BUSINESS DAYS prior to disposal. Return of this product to the purchaser/distributor will require purchaser/distributor to issue a call tag within SEVEN (7) BUSINESS DAYS of notification.
- Repair or replacement of the warranted product is the **EXCLUSIVE REMEDY** under the terms of this warranty.
- This warranty does not cover any components exposed to contact with fuels containing greater than 5% methanol, 10% ethanol, or 15% MTBE by volume or any exposure to M85/E85 fuel.

- This warranty does not cover and VST is not liable for, incidental, consequential and/or indirect damages or loss including, but not limited to, personal injury, death, property damage, environmental damage, cost of labor, clean-up, downtime, installation and removal, product damage, and loss of product, revenue or profits.
- VST is not liable for any claims or lawsuits against the purchaser/distributor.
- VST is not responsible for labor or materials necessary to disconnect or connect the warranted product for return to VST.
- Use of non-VST replacement parts, the unauthorized addition of non-VST items to equipment, and the unauthorized alteration of equipment and/or systems voids this warranty.
- VST, as to each defect, shall be relieved of all obligations and liabilities under this Limited Warranty if the vapor recovery system(s) or components have been operated with any accessory, equipment, or a part not specifically approved by VST, and not manufactured by VST to VST design and specification, or parts not specifically approved by CARB to be used with VST products.

THIS LIMITED WARRANTY IS EXCLUSIVE AND IS IN LIEU OF ALL OTHER WARRANTIES.

VST MAKES NO OTHER WARRANTIES (WHETHER WRITTEN OR ORAL), EXPRESS OR IMPLIED, INCLUDING BUT NOT LIMITED TO ANY IMPLIED WARRANTY OF MERCHANTABILITY, FITNESS FOR A PARTICULAR PURPOSE, OR OTHERWISE, AND ANY OTHER SUCH WARRANTIES ARE HEREBY DISCLAIMED.

VST NEITHER ASSUMES NOR AUTHORIZES ANY OTHER PERSON OR ENTITY TO ASSUME FOR IT OR BIND IT TO ANY OTHER LIABILITY OR OBLIGATION RELATED TO OR IN CONNECTION WITH THIS LIMITED WARRANTY.

VST products should be used in compliance with applicable federal, state, and local laws and regulations.

VST reserves the right to make changes at any time to prices and designs, or make additions or improvements with respect to its products, without incurring any obligation to modify or install same on previously manufactured products.

Vapor Systems Technologies, Inc.
Phone: (937)-704-9333 • Fax: (937)-704-9443
www.vsthose.com

IMPORTANT
PRODUCT WARRANTY
REGISTRATION CARD

12 MONTH WARRANTY BECOMES EFFECTIVE AT TIME OF INSTALLATION. IF THIS CARD IS NOT RETURNED, WARRANTY BECOMES EFFECTIVE FROM DATE OF SHIPMENT FROM VST.

THE MAXIMUM WARRANTY LIFE IS 18 MONTHS FROM DATE OF SHIPMENT.

PLEASE CALL VST IF THIS PRODUCT IS BEING USED AS A REPLACEMENT. REPLACEMENT WITH A NON VST PRODUCT VOIDS ANY WARRANTY.

SERIAL NUMBER:
INSTALLATION DATE:
INSTALLATION SITE:
CITY/STATE/ZIP:
DISTRIBUTOR NAME:
PRODUCT STYLE
☐ HOSE ☐ SAFETY BREAKAWAY
☐ NOZZLE ☐ ECS PROCESSOR

VST-0006-04/06

Warranty and Testing Stickers for Balance EVR Products

- VST will continue to use individual tracking serial numbers on every product shipped (nozzle, hose, safety breakaway, and membrane processor).
- VST will continue to include a warranty card with every product shipped.
- VST will attach additional **NOTICE** stickers to the EVR balance-style products.

Nozzle

- A florescent colored sticker will be placed over the threaded area of the nozzle where the hose is to be attached.
- This sticker will include the following text:

NOTICE: The nozzle was factory tested to and met all applicable performance standards & specifications to which it was certified: Reference all applicable CARB Executive Orders, CARB Test procedures, Exhibits, and UL Standard 842.

WARRANTY: 12-month warranty becomes effective at time of installation upon VST receipt of warranty card. If the warranty card is not returned to VST, the warranty becomes effective from VST's shipment date. The maximum warranty life is 18 months from date of shipment. Please call VST if this product is being used as a replacement. Replacement with a non-VST product voids any warranty.

Safety Breakaway

- A florescent colored sticker will be placed over one of the threaded ports of the breakaway.
- This sticker will include the following text:

NOTICE: This breakaway was factory tested to and met all applicable performance standards & specifications to which it was certified: Reference all applicable CARB Executive Orders, CARB Test procedures, Exhibits, and UL Standard 567.

WARRANTY: 12-month warranty becomes effective at time of installation upon VST receipt of warranty card. If the warranty card is not returned to VST, the warranty becomes effective from VST's shipment date. The maximum warranty life is 18 months from date of shipment. Please call VST if this product is being used as a replacement. Replacement with a non-VST product voids any warranty.

Hose

- A florescent colored sticker will be placed on the hose.
- This sticker will include the following text:

NOTICE: This hose was factory tested to and met applicable performance standards & specifications to which it was certified: Reference all applicable CARB Executive Orders, CARB Test procedures, Exhibits, and UL Standard 330.

WARRANTY: 12-month warranty becomes effective at time of installation upon VST receipt of warranty card. If the warranty card is not returned to VST, the warranty becomes effective from VST's shipment date. The maximum warranty life is 18 months from date of shipment. Please call VST if this product is being used as a replacement. Replacement with a non-VST product voids any warranty.

HIRT COMBUSTION ENGINEERS, INC. (HCE) VCS 100 THERMAL OXIDIZER WARRANTY POLICY

- This product has a 12 month warranty, which becomes effective at time of installation or from date of shipment from HCE, if registration card is not returned.
- Liability under any implied or expressed warranty is limited to replacement of the product.
- HCE is not responsible for improperly installed or misuse of the product.
- HCE cannot be held responsible for damage to the product or its equipment due to acts of nature, vandalism, or neglect.
- HCE products are warranted to be free of defects in material and workmanship.
- In the event of a warranty claim, the purchaser must obtain a Return Authorization Number prior to returning product. All shipping costs are the responsibility of the customer.
- HCE shall repair or replace, at its option, any HCE component which proves to be defective.
- The cost of labor for any field repair, removal, replacement, or diagnosis is not covered by this warranty.
- The liability of HCE is limited solely and specifically to this warranty.
- HCE shall not be liable for any special, collateral, or consequential damages arising from this warranty, the use of this equipment or from any order accepted pursuant thereto.
- The use of parts not authorized by HCE voids the warranty.
- Installation, start-up, service, or repairs of this product by personnel not certified by HCE voids the above described warranty.

The following warranty card will be shipped with the Hirt VCS 100 Thermal Oxidizer:

Hirt Combustion Engineers, Inc.
Tel: (562) 692-1490
Fax: (562) 692-7413
Email: HirtVCS@aol.com

IMPORTANT

PRODUCT WARRANTY
REGISTRATION CARD

THE 12 MONTH WARRANTY BECOMES EFFECTIVE AT TIME OF INSTALLATION IF THIS CARD IS RETURNED WITHIN 30 DAYS OF START-UP. IF THIS CARD IS NOT RETURNED, WARRANTY BECOMES EFFECTIVE FROM DATE OF SHIPMENT FROM HIRT COMBUSTION ENGINEERS, INC.

THE MAXIMUM WARRANTY LIFE IS 18 MONTHS FROM DATE OF SHIPMENT FROM HIRT COMBUSTION ENGINEERS, INC.

PROCESSOR WAS FACTORY TESTED TO AND MET APPLICABLE PERFORMANCE STANDARDS & SPECIFICATIONS TO WHICH IT WAS CERTIFIED: REFERENCE ALL APPLICABLE CARB EXECUTIVE ORDERS, CARB TEST PROCEDURES, AND EXHIBITS.

SERIAL NUMBER: VSE
TURBINE NUMBER: VSE
INSTALLATION DATE:
SITE ADDRESS:
CITY / STATE / ZIP CODE:
DISTRIBUTOR NAME:
ISD BRAND / MODEL (IF ANY):
DATE OF MANUFACTURE: