Executive Order VR-205-A
VST Phase II EVR System with Hirt Thermal Oxidizer

Exhibit 1
Equipment List

Component	Manufacturer/ Model
Nozzle	VST Model VST-EVR-NB (Figure 1A-1) VST Model VST-EVR-NB-R (Rebuilt)
Coaxial Curb Hose	VST Model VDV-EVR Series (Figure 1A-2)
Coaxial Whip Hose	VST Model VSTA-EVR Series (Figure 1A-2)
Breakaway Coupling	VST Model VSTA-EVR-SBK (Figure 1A-2)
Hanging Hardware with Liquid Removal Device	(Figure 1A-3)
Hirt Thermal Oxidizer With Indicator Panel	Hirt Model VCS 100 (Figure 1A-4) Leg Attachments: 5” – M39 48”- M40
Hirt 1/4" Check Valve[1]	Hirt P65

[1] Optional component used with Hirt Thermal Oxidizer System.

Figure 1A-1
Model VST-EVR- NB Nozzle

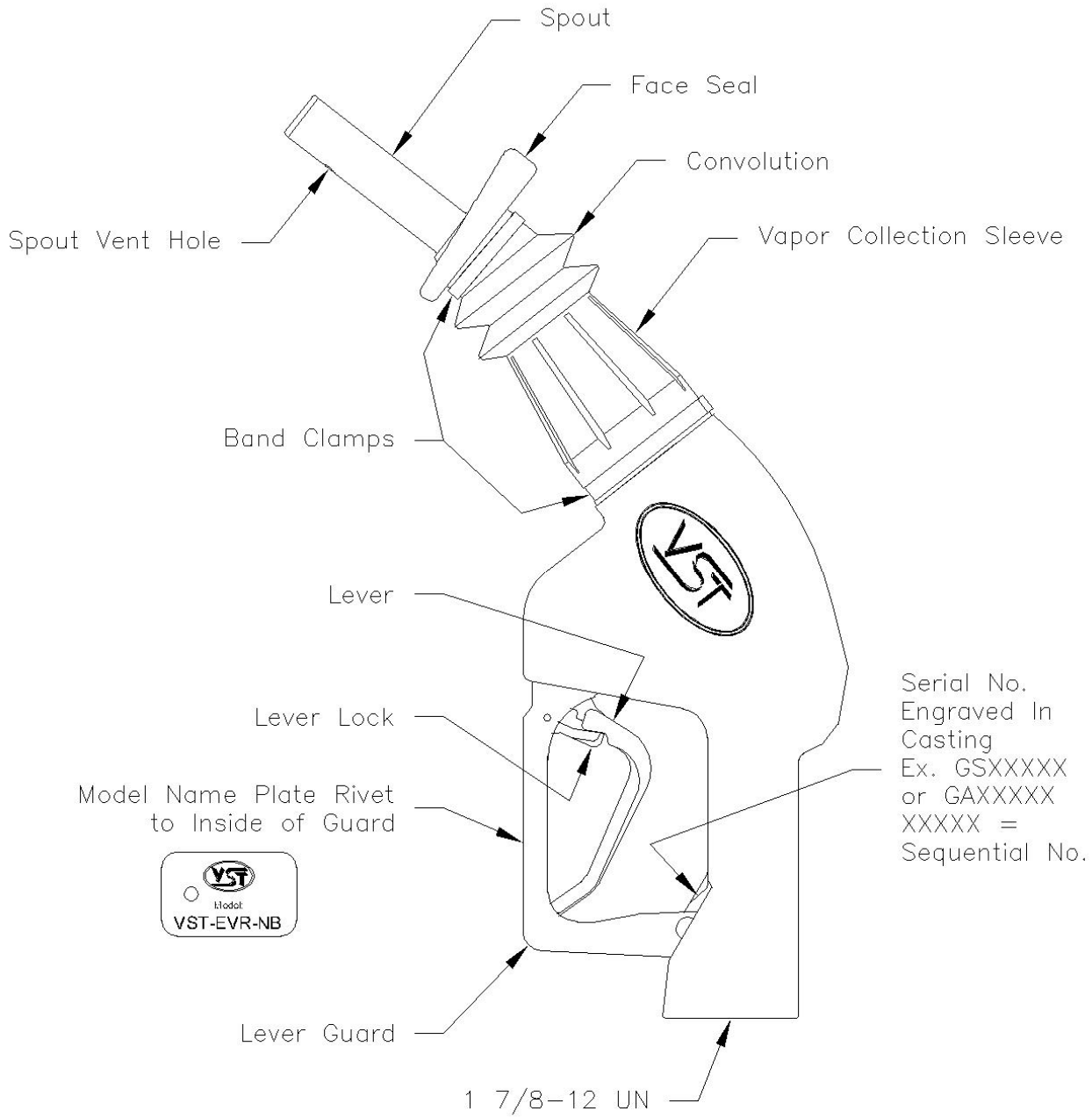

Figure 1A-2
VST Hanging Hardware
(Nozzle, Coaxial Curb Hose, Breakaway, and Coaxial Whip Hose)

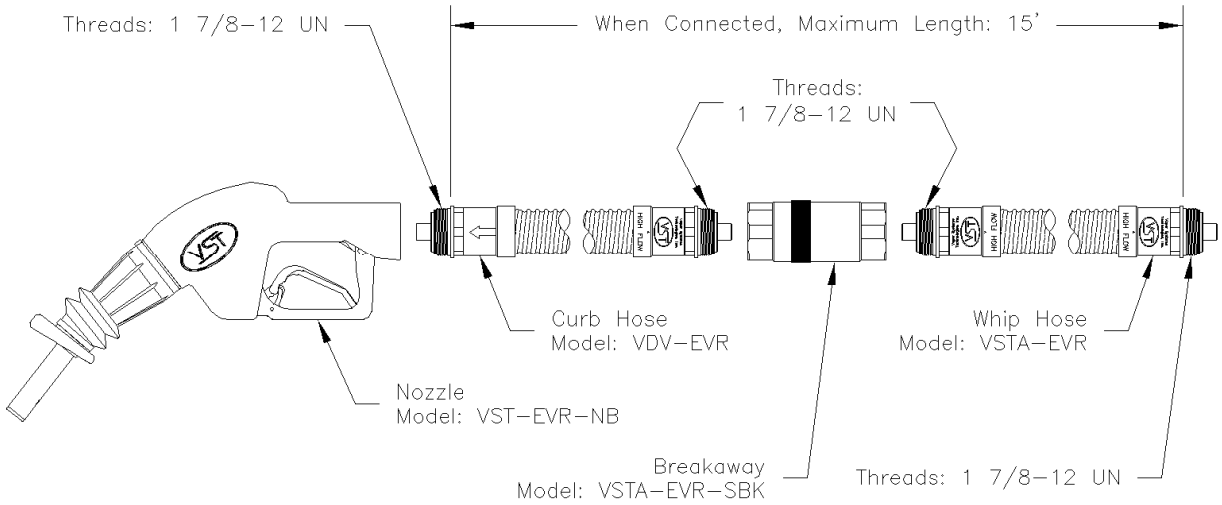

Figure 1A-2 (continued)
VST Hanging Hardware
(Nozzle, Coaxial Curb Hose, Breakaway, and Coaxial Whip Hose)

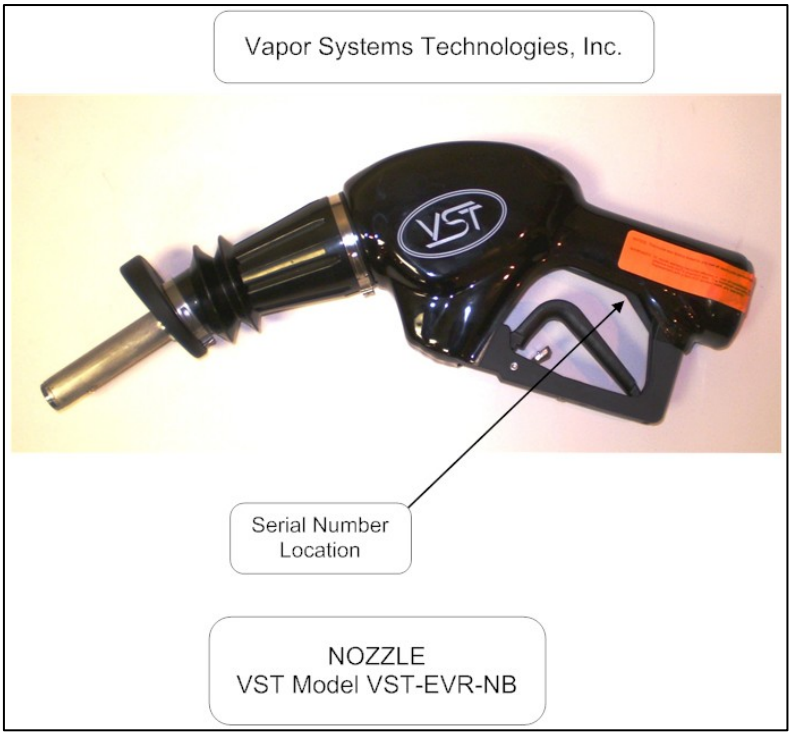

Figure 1A-3
Typical VST Hanging Hardware with Liquid Removal Device

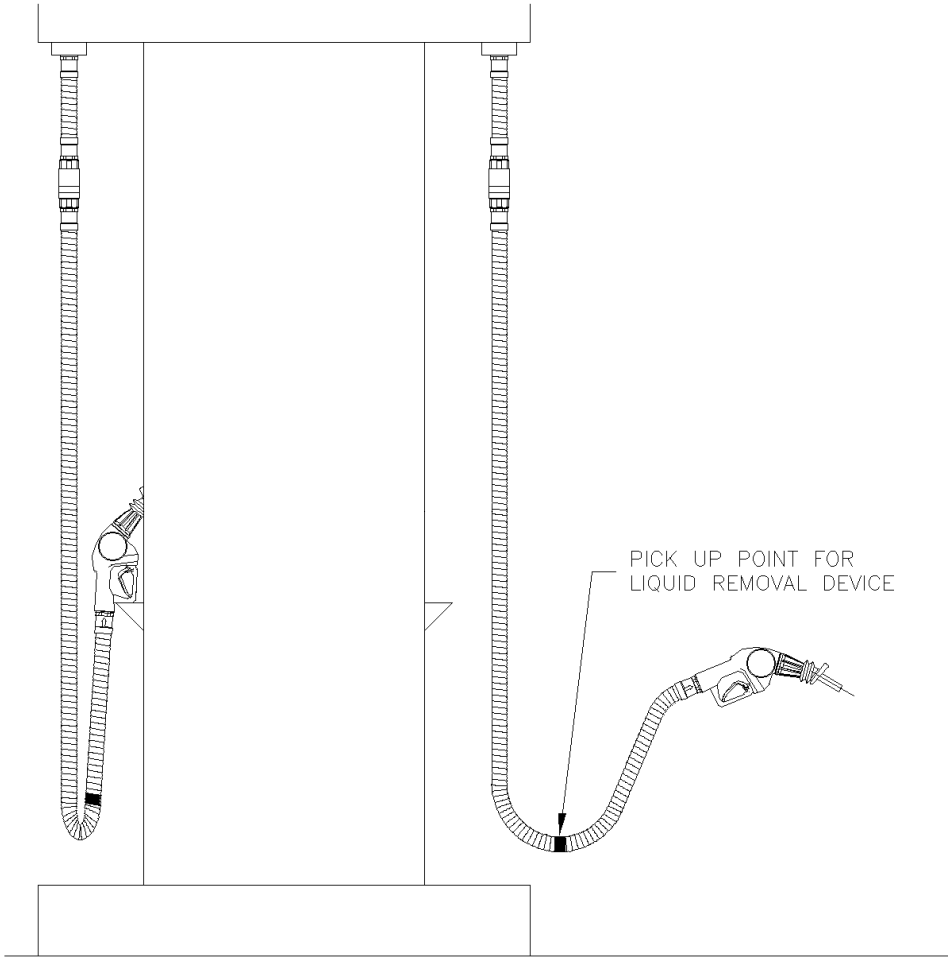

Figure 1A-4
Hirt VCS 100 Thermal Oxidizer and Indicator Panel

VCS 100 Identification Plate

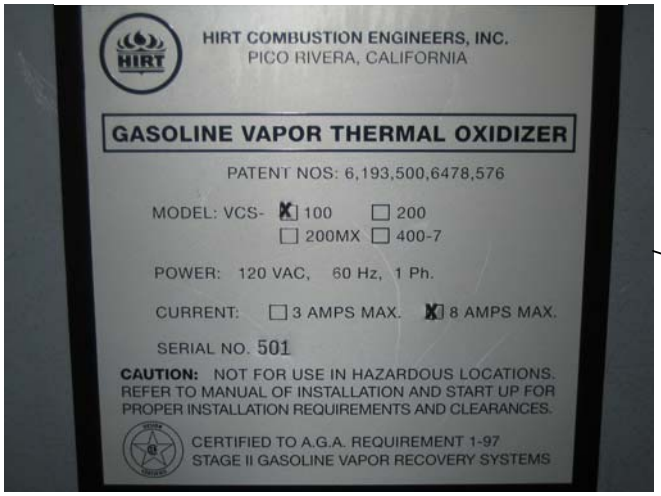

Hirt VCS 100 Processor

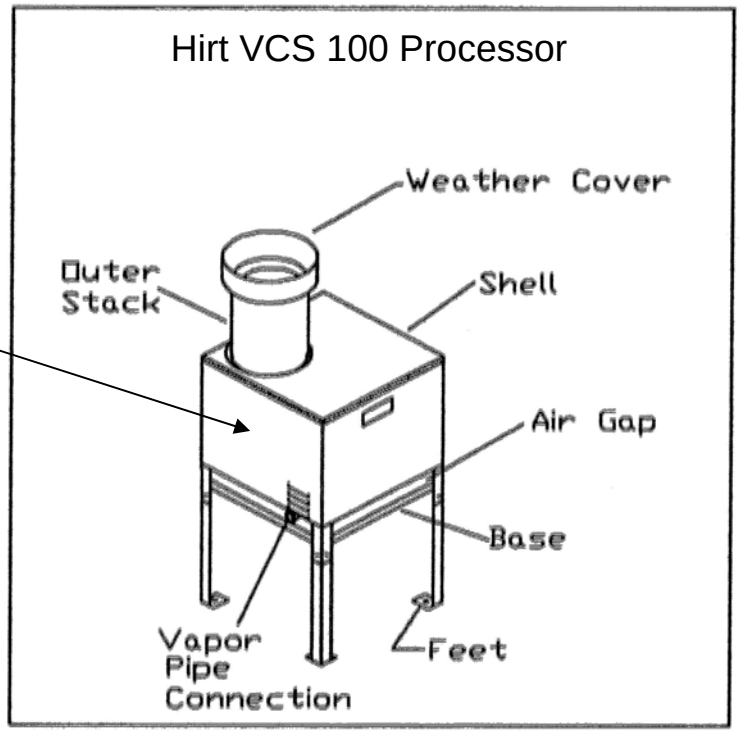

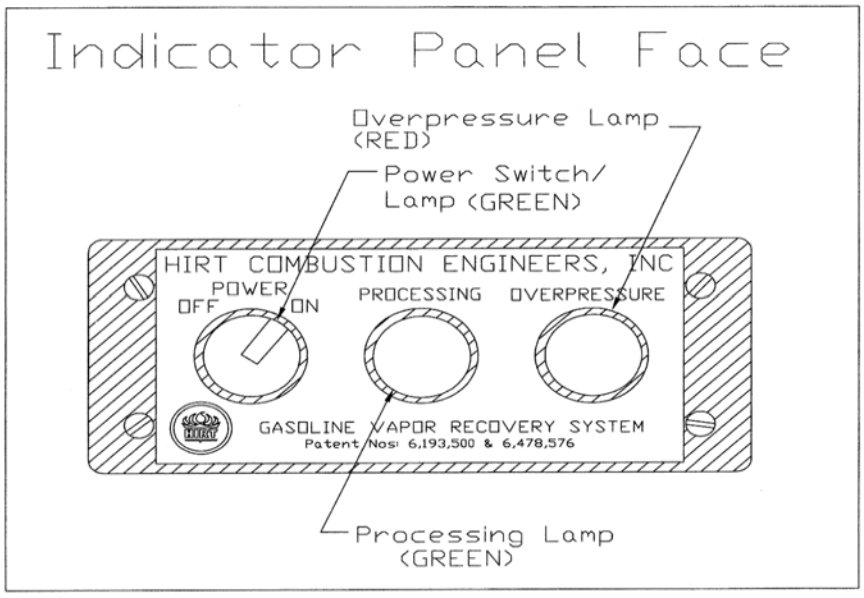
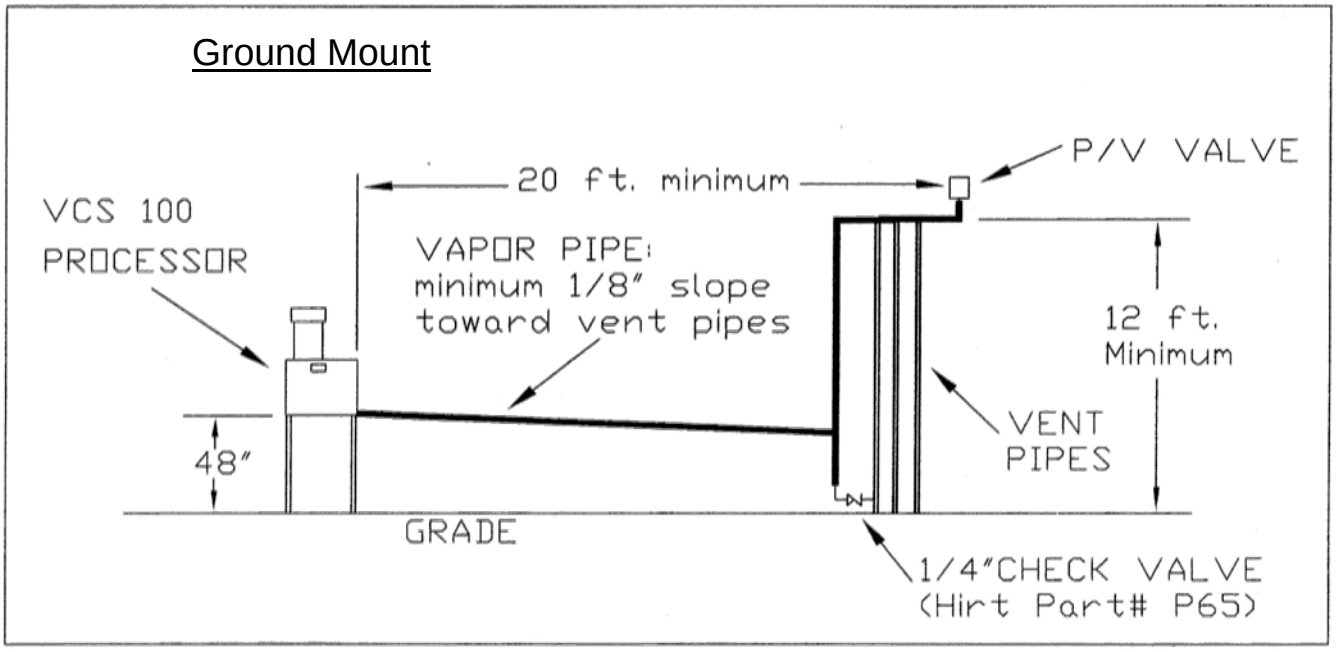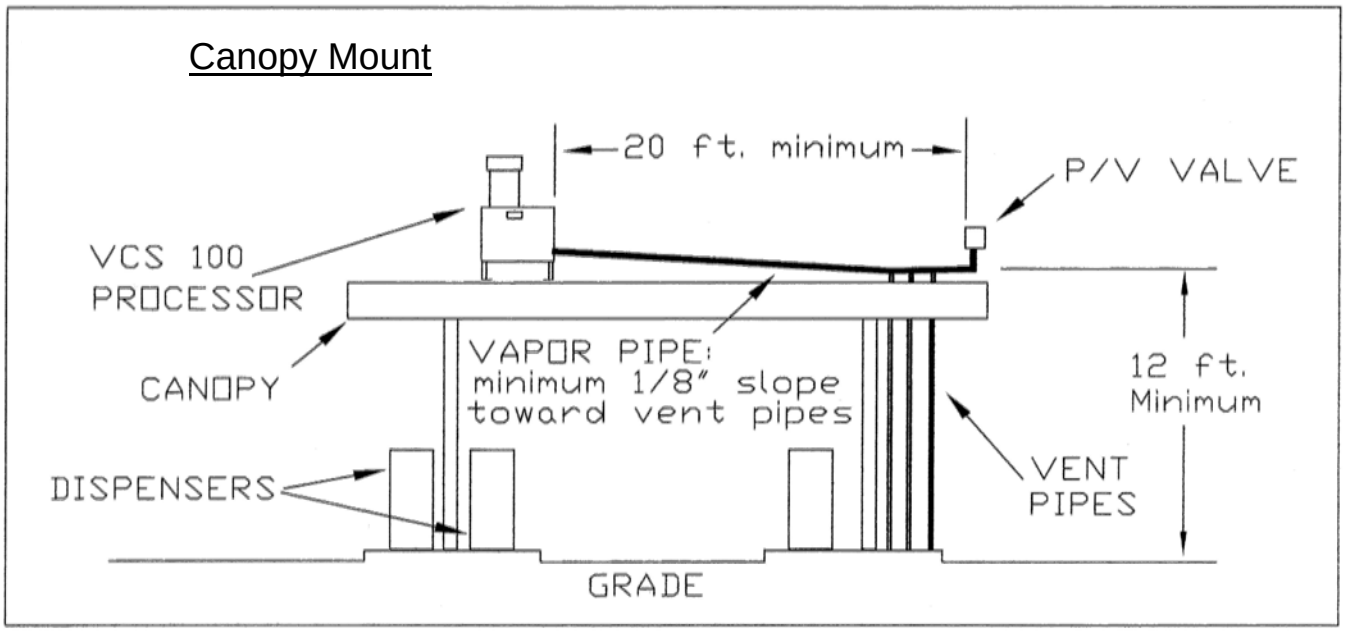
Figure 1A-4 (continued)
Typical Hirt VCS100 Thermal Oxidizer Processor