INSTALLATION MANUAL

HIRT VCS 100
VAPOR PROCESSOR AND INDICATOR PANEL

FOR EXECUTIVE ORDER VR-207

HIRT COMBUSTION ENGINEERS, INC.
3659 San Gabriel River Parkway · Pico Rivera, Ca 90660
P.O. Box 6816 · Pico Rivera, CA 90661
Tel: (562)692-1490 · Fax: (562)692-7413 · E-mail: HirtVCS@AOL.com

REV. 5:10/2008

Table of Contents

Section	Page
1. Introduction	1
2. Safety/Warnings	1
3. Contractor Requirements	1
4. Hirt VCS 100 Processor Overview	2
4.1 Theory of Operation	
4.2 How the Processor Operates	
4.3 Indicator Panel Function	
4.4 Dimensions, Weight, Specifications	
4.5 Processor Components	
5. Installation of Processor	5
6. Installation of Indicator Panel	9
7. Connection of Electrical and Vapor Pipe	9
8. Start-Up	13
9. Maintenance Instructions	17
10. Repair and Replacement of Components	17
11. Product Warranty	17

1. INTRODUCTION

This Manual contains the operation, installation, interconnection, start-up, and maintenance instructions for the VCS 100 processor and Indicator Panel. Note, these instructions are written to give the best installation in a sequence easiest for the installer. If there are any instructions in this manual which seem impossible, impractical, or questionable for your installation, call the Hirt Customer Service Department at (562) 692-6970 and ask for information regarding your local Hirt representative. Note, this manual should be retained for future reference.

2. SAFETY/WARNINGS

WARNING: Improper installation, adjustment, alteration, service or maintenance can cause property damage, injury, or death. Read instructions thoroughly before installing or servicing this equipment.

WARNING: When gasoline vapor abatement system (i.e. processor) is in operation, temperature inside can exceed 2,000◦F. To prevent burn hazard, do not contact any part of the gasoline vapor abatement system except controls. Do not remove protective covers while gasoline vapor abatement system is in operation.

3. CONTRACTOR REQUIREMENTS

To prevent from voiding the product warranty, all contractors who install, startup, and/or repair the VCS 100 system must be a Hirt VCS 100 certified technician. To attend a VCS 100 training session, call Hirt Customer Service at (562) 692-6970 or send an email request to HirtVCS@aol.com. Once Hirt training is successfully completed, the technician will receive a wallet size proof of certification card. Technicians should carry the card while on the jobsite. Hirt maintains a list of active certified installers and companies. Technician certification can be verified by calling or emailing Hirt Combustion Engineers, Inc.

Note to Contractors/Technicians: Contractors should always verify the training and certification requirements with the local Air Quality Management District (District) before beginning installation of CARB EVR systems. The District inspector may request to see your certification card(s) on-site for confirmation.

4. HIRT VCS 100 PROCESSOR OVERVIEW

4.1 THEORY OF OPERATION

The processor continuously measures the pressure of the vapor in the storage tanks. When that pressure is negative, the processor remains de-energized and completely inactive. At any time when the pressure in the storage tank vapor becomes positive, the processor energizes its turbine, which extracts vapor from the storage tanks and sends that vapor into its thermal oxidizer where that vapor is destroyed. The processor continues to extract vapor until the pressure of the vapor is returned to negative, whereupon the processor turns itself off. It remains off unless or until the pressure again becomes positive.

4.2 PROCESSOR MECHANIZATION

The processor is connected to the storage tanks via the tank vapor vents, or another vapor pipe. The processor contains a vacuum sensor/switch, turbine, spark igniter, pilot, flame safeguard, vapor valve, and a thermal oxidizer.

When the vacuum sensor/switch measures that the pressure in the storage tank is negative, it remains open, thus not energizing the processor. In this condition the processor is inert and has zero effect on the remainder of the dispensing facility or its Stage I/II vapor recovery systems.

When the vacuum sensor/switch measures that the pressure of the vapor in the storage tanks is positive, the switch closes thereby energizing the turbine and activating the flame safeguard. The flame safeguard generates a spark at the pilot tip (i.e. spark igniter). The vapor is forced by the turbine from the storage tanks into the pilot and hence into the spark igniter. Only ignition of the pilot can cause the flame safeguard's relay to close*. Only when pilot ignition is present and the flame safeguard relay is closed does the vapor valve open admitting vapor to the thermal oxidizer. Note that if the pilot does not ignite, the main vapor valve does not open, thus unprocessed vapor from the thermal oxidizer cannot be vented to the atmosphere. In the thermal oxidizer, the vapor is converted into CO_2 and H_2O and then vented to the atmosphere.

*This electrical interlock, built into the flame safeguard, is required by the California State Fire Marshal, ETL, American Gas Association specification 1-97, and ANSI Z21.20

4.3 INDICATOR PANEL FUNCTION

The processors' electrical power source comes thru an Indicator Panel. The panel allows the station operator to determine the current state of the

processor and whether or not the processor is operating properly. The panel includes a POWER switch with an integral POWER (green) lamp, a PROCESSING (green) lamp, and an OVERPRESSURE (red) lamp.

During normal operation, the POWER switch is on, the POWER lamp is on, the PROCESSING lamp is lit intermittently, and the OVERPRESSURE lamp is extinguished. The PROCESSING lamp is wired so it will light when the main valve is open and thermal oxidation is occurring.

The OVERPRESSURE lamp is wired to the vacuum sensor/switch and a timing module. If the UST pressure is positive for at least 1 hour, then the vacuum sensor/switch will be closed and the timing module will light the OVERPRESSURE lamp. The OVERPRESSURE lamp indicates a leak in the vapor recovery system or possibly a malfunction of the Hirt VCS 100 processor. The OVERPRESSURE lamp will extinguish after the leaks or processor malfunction is corrected and the processor has restored the UST ullage to a nominal –0.40” w.c.

4.4 Processor Dimensions, Weight, and Specifications

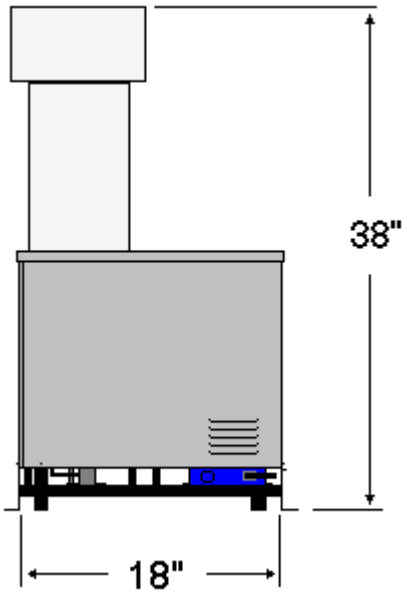

MODEL: VCS 100
SERVICE: Outdoor, non hazardous area
ELECTRICAL: 120 VAC, 3 Ampere, intermittent
VAPOR PIPE CONNECTION: 3/4@ NPT
WEIGHT: 80 lbs.
OVERALL DIMENSIONS**:** 18” wide X 18” deep x 38” high (without legs)

4.5. Processor Internal Components

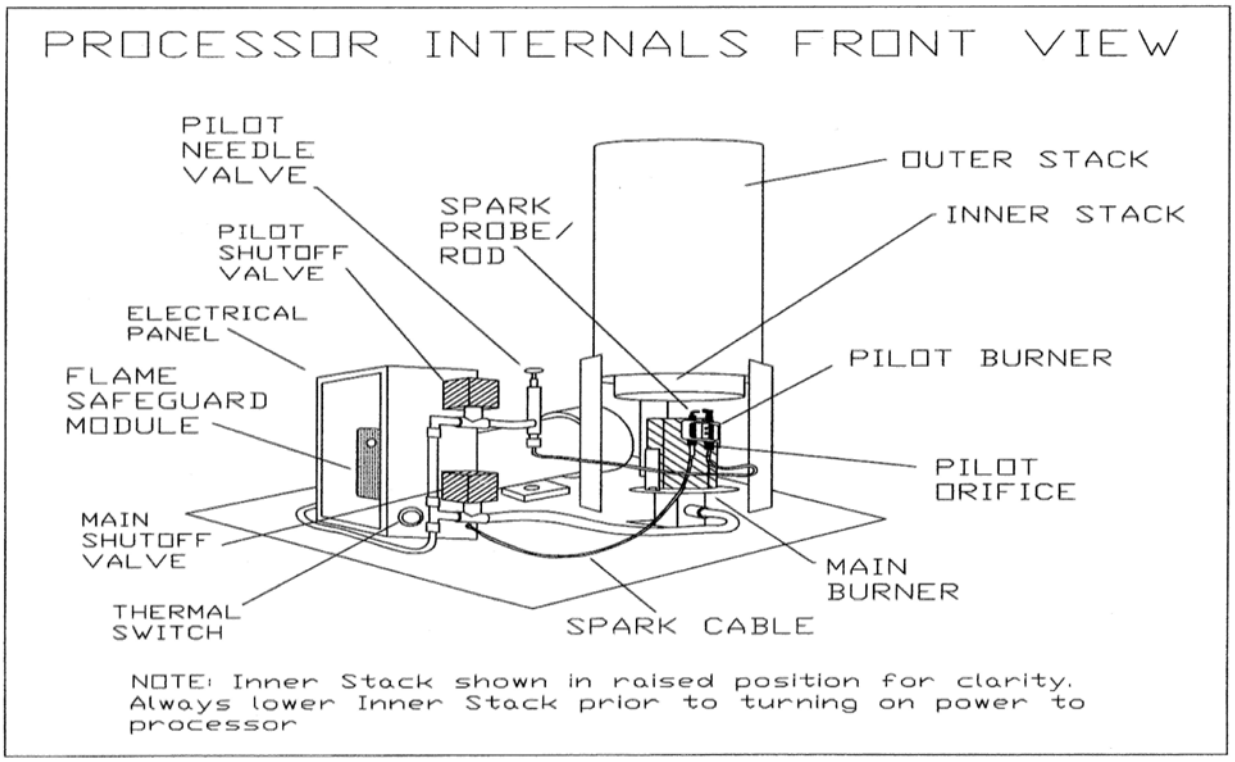

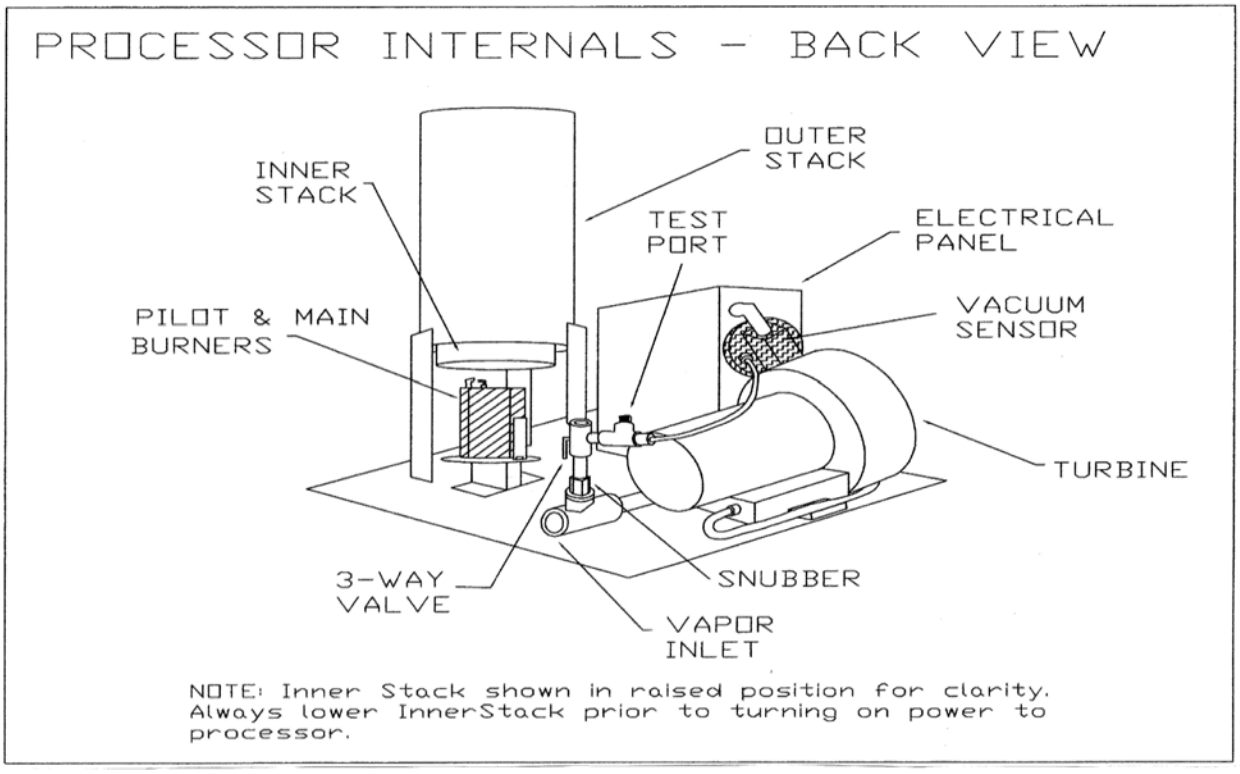

5. INSTALLATION OF PROCESSOR

5.1 PRE-INSTALLATION SITE REQUIREMENTS

Selection of processor location should be based on the following requirements and considerations:

5.1.1 Non-Hazardous area.

5.1.2 A minimum horizontal distance of 20 ft. from any fuel transfer point (i.e. nozzles or storage tank drop tubes).

5.1.3 A minimum horizontal distance of 20 ft. from pressure/vacuum valve.

5.1.4 Processor must be located so there is a 2 ft. clearance on all sides for maintenance.

5.1.5 Remote from wheel traffic, foot traffic, and valuable ground level space.

5.1.6 Ease of pipe run to processor from underground storage tanks(s). Typically the processor connects to the storage tank vent pipes. However, the processor can be connected to any tank fitting <u>except</u> for the dispenser's vapor return pipe. Note, the vapor piping must slope 1/8" per foot to prevent condensate from blocking vapor path. A slope of ¼" per foot is recommended. (See section 7.2.2 and FIGURE 8)

Any installations resulting in a low point liquid trap shall use a Hirt P65 ¼" check valve to drain any liquid back to the UST (see figures 1 and 4 for typical check valve configurations).

5.1.7 Ease of conduit run to Indicator Panel.

5.1.8 Do not locate processor on property easement. Consult local authority, such as City Hall, to determine width of set back from properly line.

The preferred location for the processor is on the roof of the building to which the vent pipes attach. Many other locations are also practical such as ground mount, canopy mount, roof mount on a remote building, and satellite mount as noted in Figures 1 through 4.

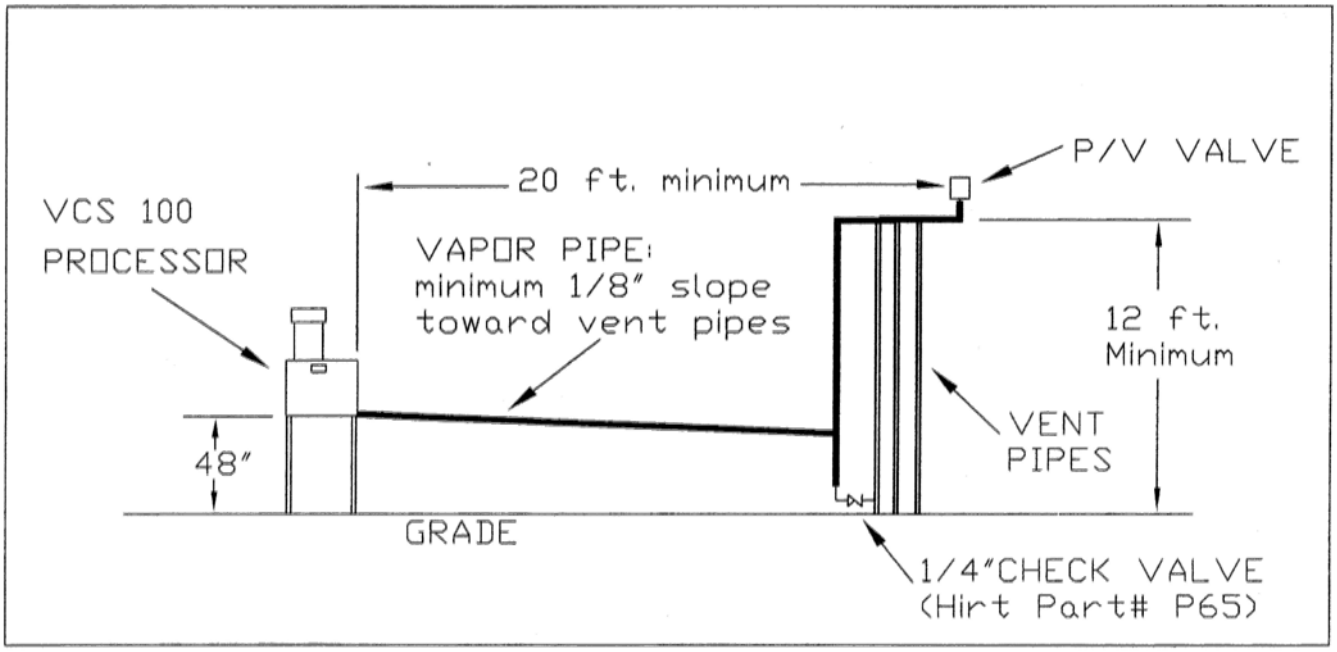

FIGURE 2: Canopy Mount

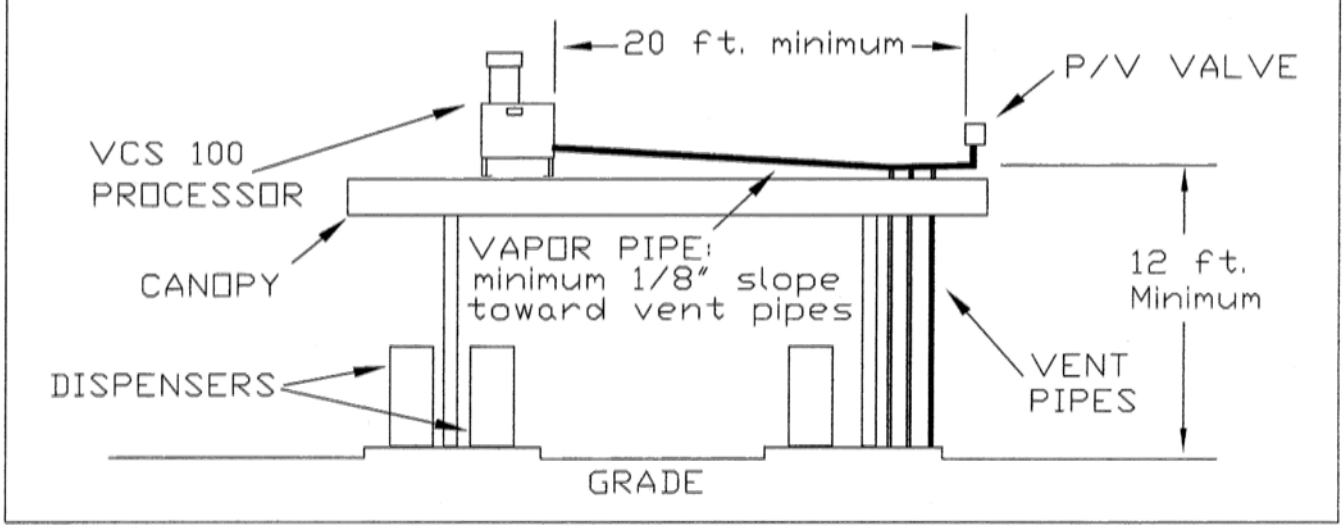

FIGURE 3: Roof Mount

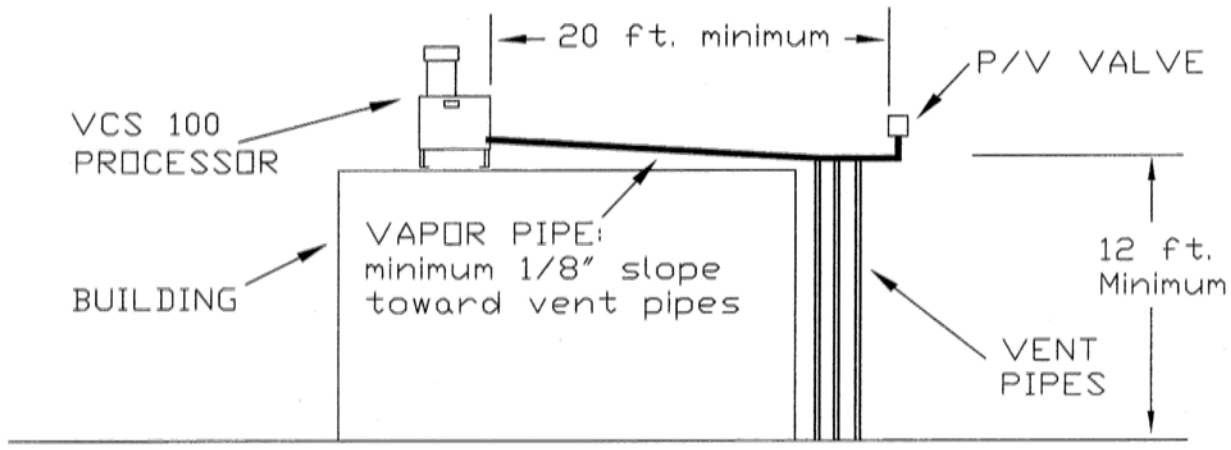

FIGURE 4: Satellite Vapor Pipe

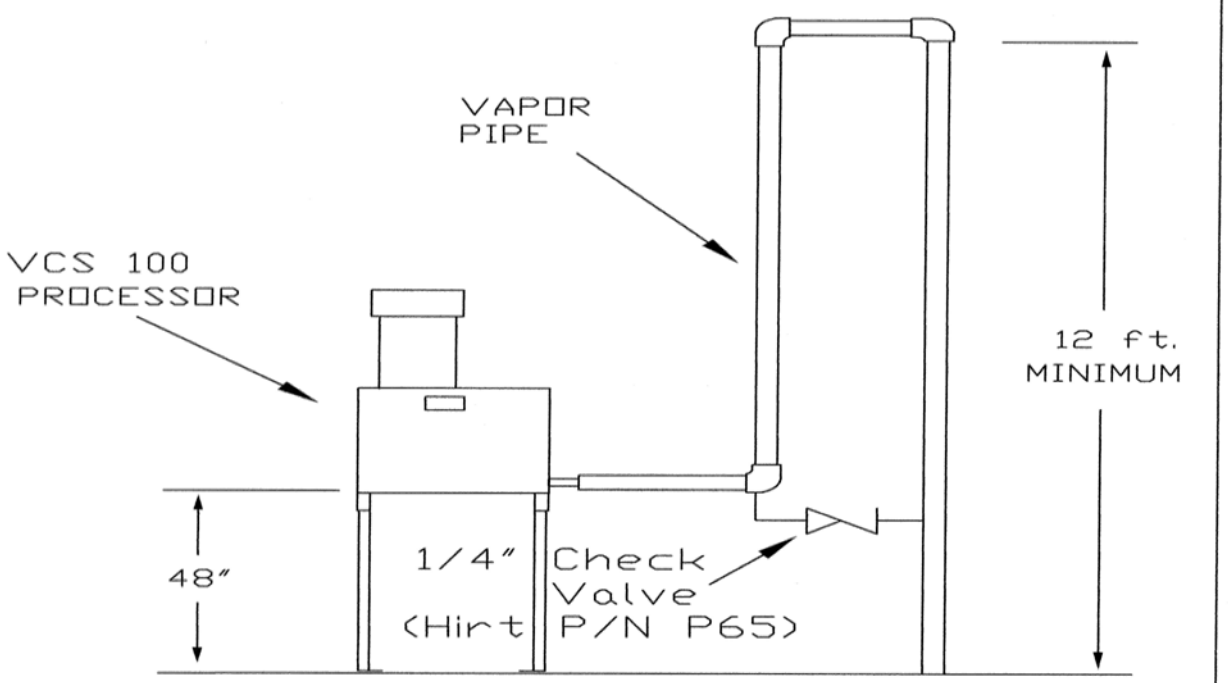

5.2 ASSEMBLY OF LEGS TO PROCESSOR

Please refer to FIGURE 5, the processor general arrangement drawing, for the following instructions.

FIGURE 5: Processor (general arrangement)

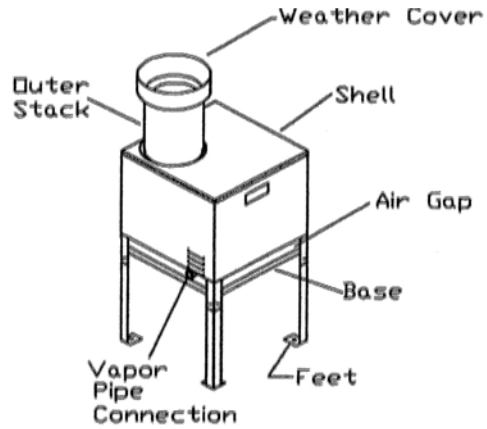

FIGURE 6

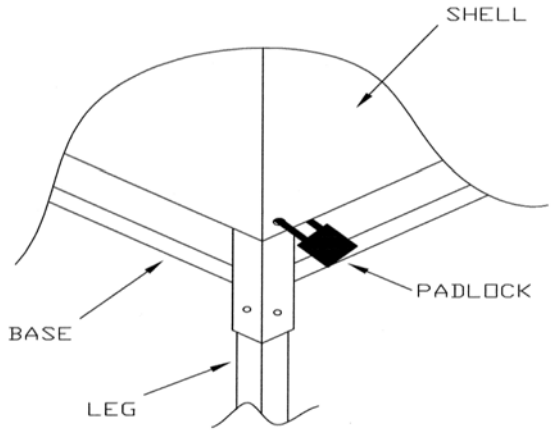

Ground level mount requires the use of the 48” Legs, and canopy or roof mount will require the 5” or longer Legs.

5.2.1 Bolt appropriate Legs to Base of processor. Be sure to use the bolts, lock washers, and nuts provided with the Legs. Note that Legs attach behind corner angle brackets of Base, See FIGURE 6 for details.

5.2.2 Bolt feet to concrete, deck plate, and/or solid non-flammable structure. Note, concrete mount will require the use of (4) 1/4” DIA. X 3” RED HEAD wedge anchors (i.e. 2.5” embedment).

WARNING: Do not block 1.5” air gap between processor Shell and Base. This gap allows combustion air to reach thermal oxidizer. Also, keep the processor area free and clear from combustibles, keep a minimum clearance of 2 ft. all the way around processor.

6. INSTALLATION OF INDICATOR PANEL

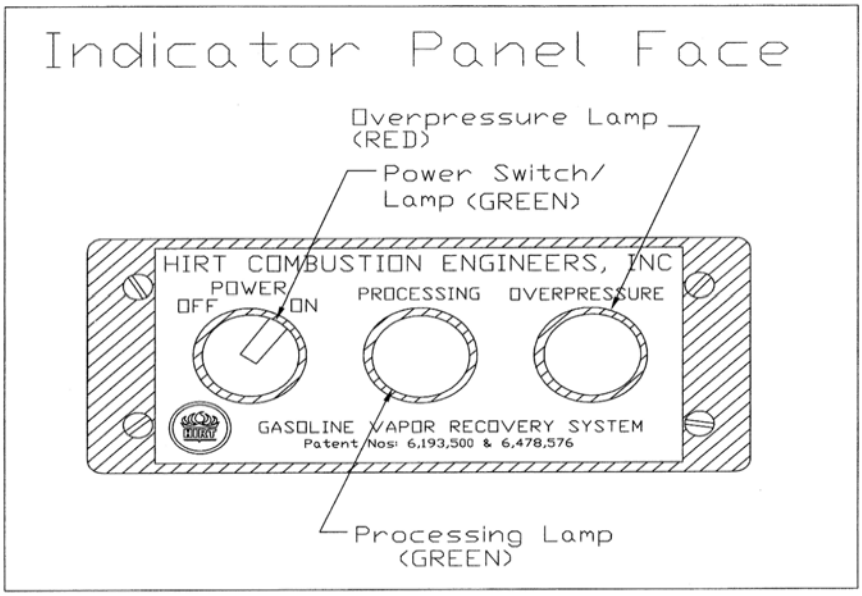

Install the Indicator Panel at a location chosen for the following considerations:

6.1 Indoors

6.2 Access by attendant.

6.3 In view of attendant.

6.4 Ease of conduit run to station's main electrical panel.

6.5 Ease of conduit run to processor location.

7. CONNECTION OF ELECTRICAL AND VAPOR PIPE

Remove Processor's Weather Cover, Shell, and electrical panel lid prior to performing the following steps.

7.1 ELECTRICAL POWER SUPPLY

7.1.1 Note that the power to the Indicator Panel and processor comes through the station master switch and the emergency pump shutdown switch. See FIGURE 7.

7.1.2 Wire size should be per local electrical code for an eight (8) ampere, 120 VAC load. Be sure to include circuit protection per local code. Also, system must be electrically grounded in accordance with local

codes, or in the absence of local codes, with the current edition of the National Electrical Code, ANSI/NFPA70.

7.1.3 Conduit access to the processor is through the bottom of the processor's electrical panel. Be sure to use a sealed cable fitting approved for use in Class I, Groups C and D, Division 2 areas where the conduit enters the panel.

FIGURE 7: Field Wiring

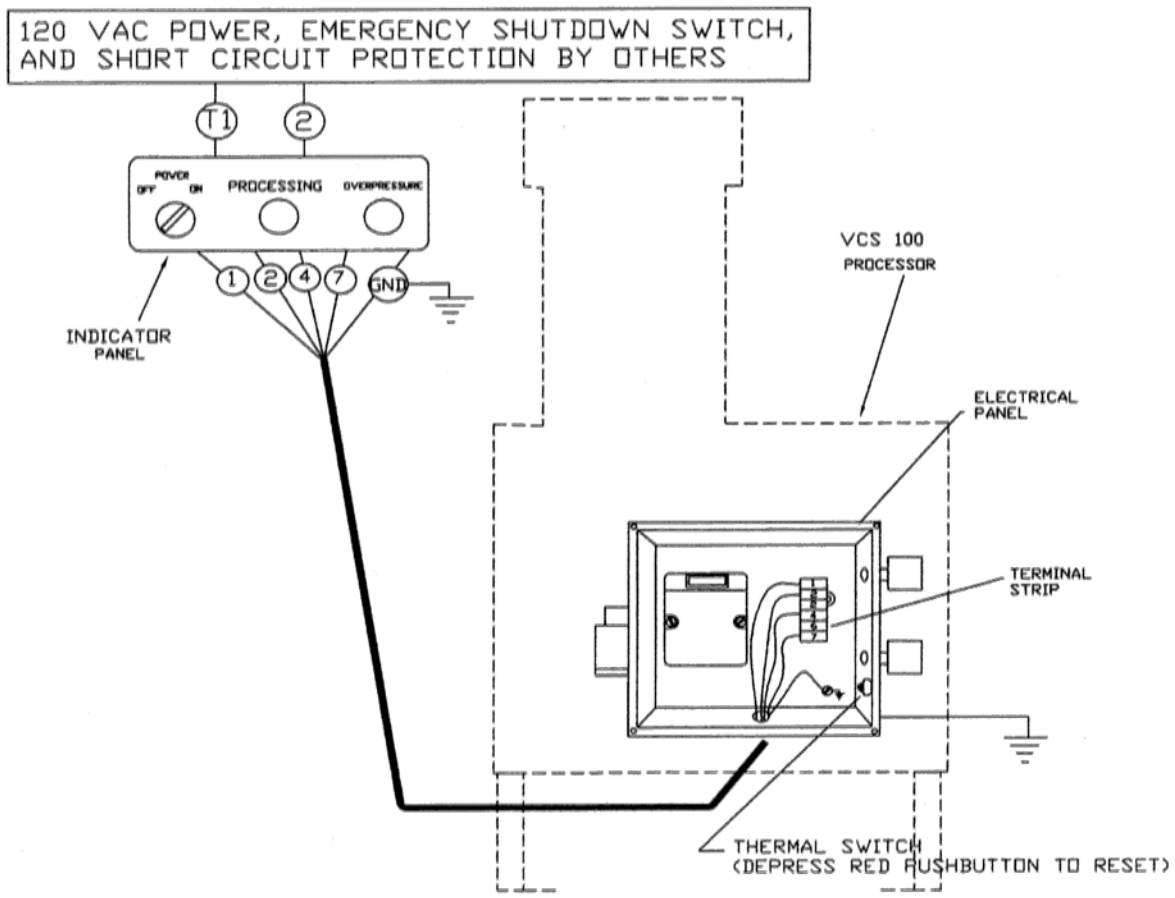

7.2 GASOLINE VAPOR SUPPLY

7.2.1 A vapor pipe is needed to connect the processor to the ullage of <u>all</u> the gasoline storage tanks. Use 2" NPT galvanized pipe for runs up to 300 ft. Usually the vapor pipe connects to the vent pipes, however, any connection to the ullage of the storage tanks, <u>other than direct connection to the dispenser's vapor return pipe</u>, is acceptable. See FIGURE 8.

FIGURE 8: Pipe Separation for Processor

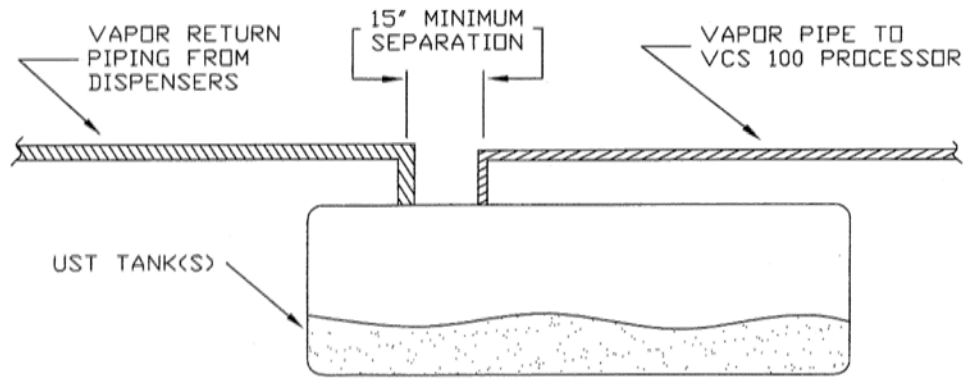

7.2.2 Vapor pipe must rise continuously from storage tank ullage connection to processor connection, and it needs to be supported to prevent trapping liquid in droops or sags in the pipe. Pipe slope must be at least 1/8” per foot, but a slope of 1/4” per foot is recommended. Also be sure to put a pipe support close to the processor to prevent placing undue stress on the Turbine.

7.2.3 Vapor pipe configuration must prevent liquid gasoline from reaching processor. Acceptable solutions include locating the processor 12 ft. above grade, connecting the vapor pipe to the top of the vent pipes, and installing a 12 ft. high loop. See FIGURES 1, 2, 3, and 4. Any installations resulting in a low point liquid trap shall use a Hirt P65 ¼” check valve to drain any liquid back to the UST (see figures 1 and 4 for typical check valve configurations).

7.2.4 Vapor pipe connection at the processor is with (3) 3/4” NPT nipples, (1) 3/4" NPT lockable ball valve, (1) 3/4” NPT union, and (1) 3/4” NPT to 2” NPT bell reducer. Note: The ball valve is installed in the vapor pipe at the processor for maintenance and repair. The ball valve is to be left in the locked open position (Opened to UST Ullage) during normal operation. Failure to leave valve in an open position may result in a processor malfunction. Note, use no more than a 12” length of 3/4” piping components. See FIGURE 9 for details.

FIGURE 9: Typical Piping Connection to Processor

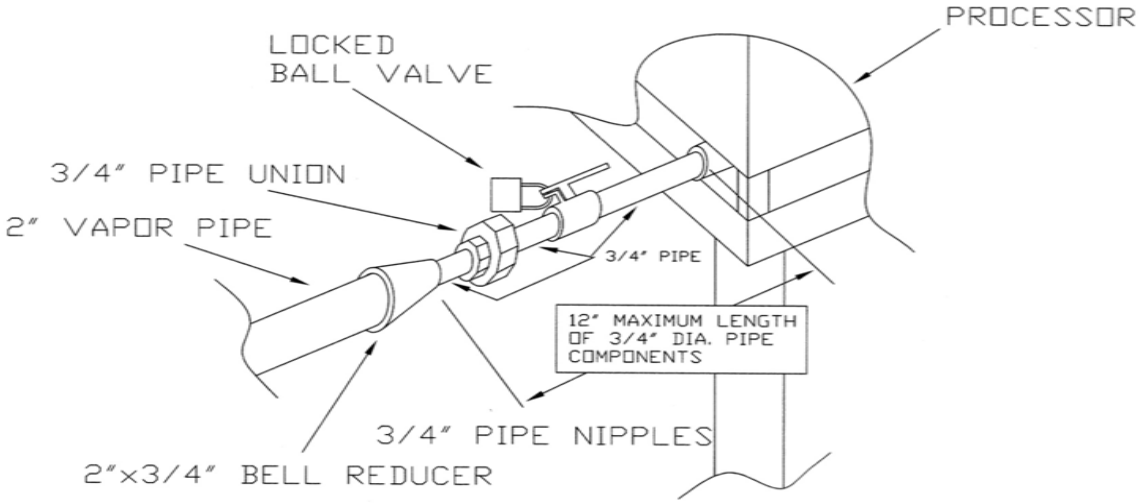

CAUTION: Hold processor internal pipe train with backing wrench to <u>prevent</u> twisting pipe train while connecting vapor piping.

7.2.5 If the ullage of the tanks is not already interconnected underground, then manifold the vent pipes together with 2" galvanized pipe at a minimum of 12 ft. above grade. See FIGURE 10 below. Note that at least (1) P/V Valve must remain connected to the manifold.

FIGURE 10: Typical Vent Pipe Manifold

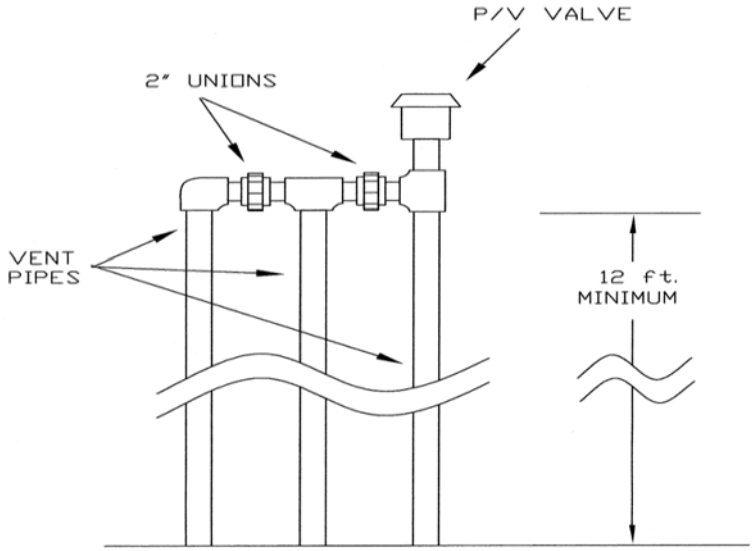

8. START-UP

If all instructions thus far have been followed, the system should start itself and run automatically. Proceed with the following steps:

8.1 Check to see that nozzles are on their hangers and vapor hoses are connected. Check also to see that gasoline storage tank fittings (fill caps, dry breaks, drop tubes, drain valves, etc.) are seated and sealing.

8.2 At the Indicator Panel, turn the POWER switch ON. The green lamp on the switch should light, and the processor should have electrical power now. The green PROCESSING lamp will be lit intermittently (only when the processor is energized), and the red OVERPRESSURE lamp should remain extinguished.

WARNING: The processor (pilot and main burner) is automatic. It will cycle its thermal oxidizer ON if vacuum diminishes in the vapor spaces and OFF if there is sufficient vacuum. Therefore use caution when working close to the thermal oxidizer. It may come ON without notice. A mirror is recommended for looking down the stack.

8.3 Check the pressure in storage tanks.

8.3.1 If UST ullage pressure is negative (vacuum), then proceed with step 8.6.

8.3.2 If the storage tank pressure is positive, check to see that turbine is running and either there is a flame at pilot burner tip or a spark. If not, reset thermal switch inside processor's electrical panel, by depressing (red) pushbutton, see FIGURE 7, Field Wiring Drawing. Turbine and spark should come on. If so, proceed with step 8.4. If turbine is not running or sparking is not present, refer to Hirt VCS 100 Troubleshooting Manual.

8.4 Within 1 hour, the processor pilot and main burner stages should ignite. Once a vacuum of approximately -0.40" w.c. is generated, the processor should shutoff. This indicates that the processor is completely functional and controlling itself automatically. If so, go to step 8.8. If the stages don't ignite within 1 hour or if your work schedule is such that waiting 1 hour is inconvenient then continue with the following step 8.5.

8.5 The turbine in the processor should be running and the igniter/sensor probe sparking but the pilot will not be ignited. Failure of the pilot to ignite is probably because the station's vapor piping is full of air. To purge this air and replace it with vapor, use 2 short pieces of wire and jump the circuit from terminal [1] to [6] and [6] to [7] at the terminal strip inside the electrical panel inside the processor.

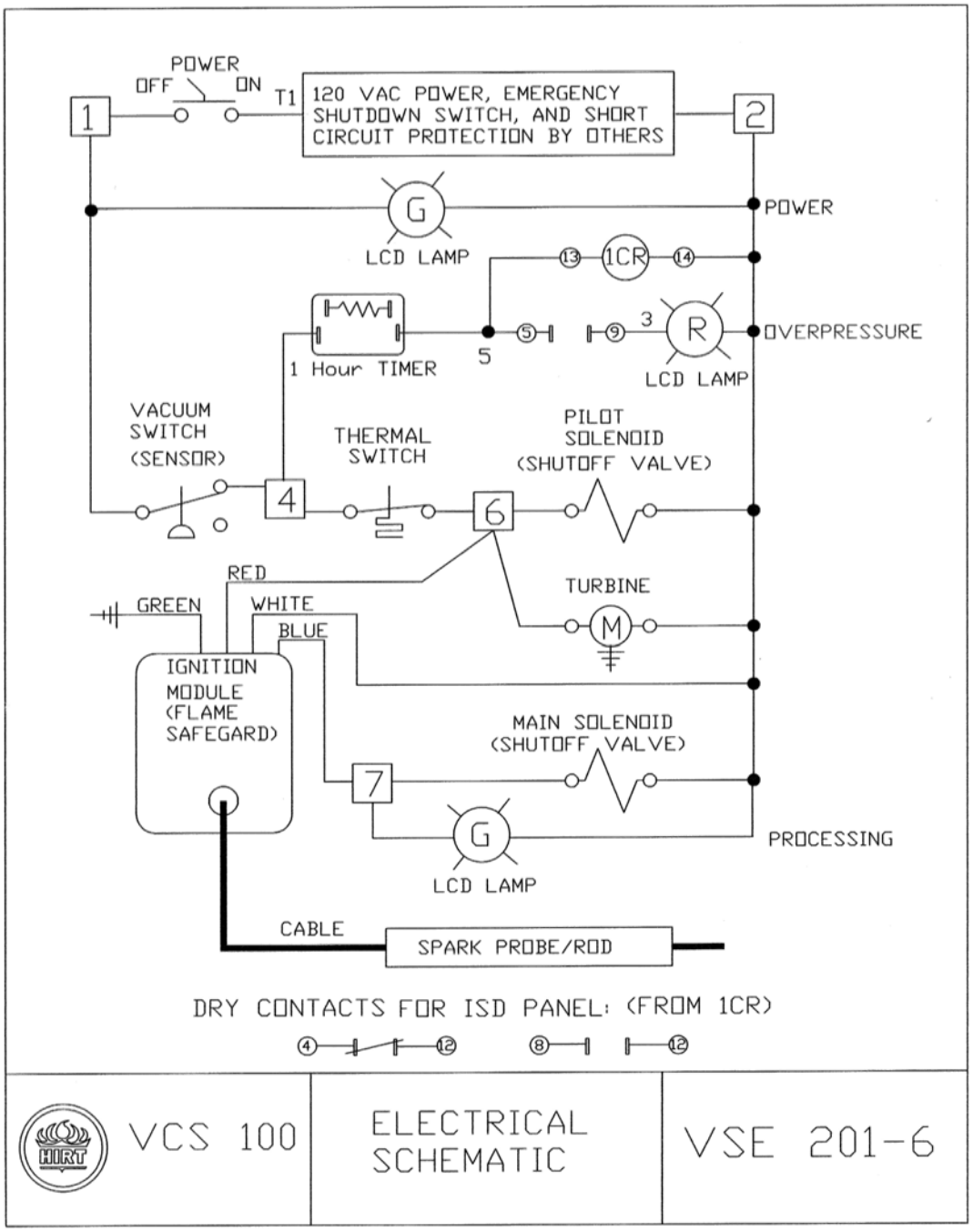

Note on the ELECTRICAL SCHEMATIC that a [1] to [6] jumper energizes the turbine, ignition module, and pilot solenoid. A [6] to [7] jumper energizes the main solenoid.

As soon as the air is purged from the vapor piping, approximately 15 minutes, the pilot and main stages will both ignite. As soon as pilot and main ignite, the 2 jumpers must be removed. If so, go to step 8.8.

If the stages do not ignite after 15 minutes, go to step 8.7.

8.6 The processor will not turn on if the vacuum sensor/switch is satisfied. Therefore, any air in the vapor piping will need to be purged so the processor stages can ignite when storage tank vacuum decays. To purge this air and replace it with vapor, use 2 short pieces of wire and jump the circuit from Terminal [1] to [6] and [6] to [7] at the terminal strip inside the electrical panel inside the processor. Note on the ELECTRICAL SCHEMATIC that a [1] to [6] jumper energizes the turbine, igniter, and pilot solenoid. A [6] to [7] jumper energizes the main solenoid. As soon as the air is purged from the vapor piping, approximately 15 minutes, the pilot and main stages will both ignite. As soon as pilot and main ignite, the 2 jumpers must be removed. If so, go to step 8.8. If the stages do not ignite after 15 minutes, go to step 8.7.

8.7 If the pilot and main do not ignite after the jumpers have been connected for 15 minutes, it is probably because there is an air leak in the vapor piping and air is entering as fast as it is being purged.

First remove the jumper wires. To find leak(s), conduct ARB test procedure TP-201.3 and Exhibit 4 (Items to consider when conducting TP-201.3). Check the pipe fittings, vent riser manifold, PV valve, storage tank fill tube caps, dry break gaskets and cover cap gaskets, hoses, nozzles, and vapor valves – any place where air could be entering the UST ullage space. Correct leaks and then go back to step 8.3.

8.8 Check setting of Pilot Needle Valve adjustment. The valve is used to adjust the <u>length</u> of the (2) tongues of flame at the pilot burner. The ideal pilot flames are approximately 1” long, blue in color, with yellow tips. One flame tongue licks the Spark Probe/Rod. The factory setting for the Pilot Needle Valve is 2 1/4 turns open. A small adjustment may be necessary to achieve the ideal flame length. If required, adjust the black knob on the Needle

Valve more open or closed until ideal flame setting is achieved. See FIGURE 11.

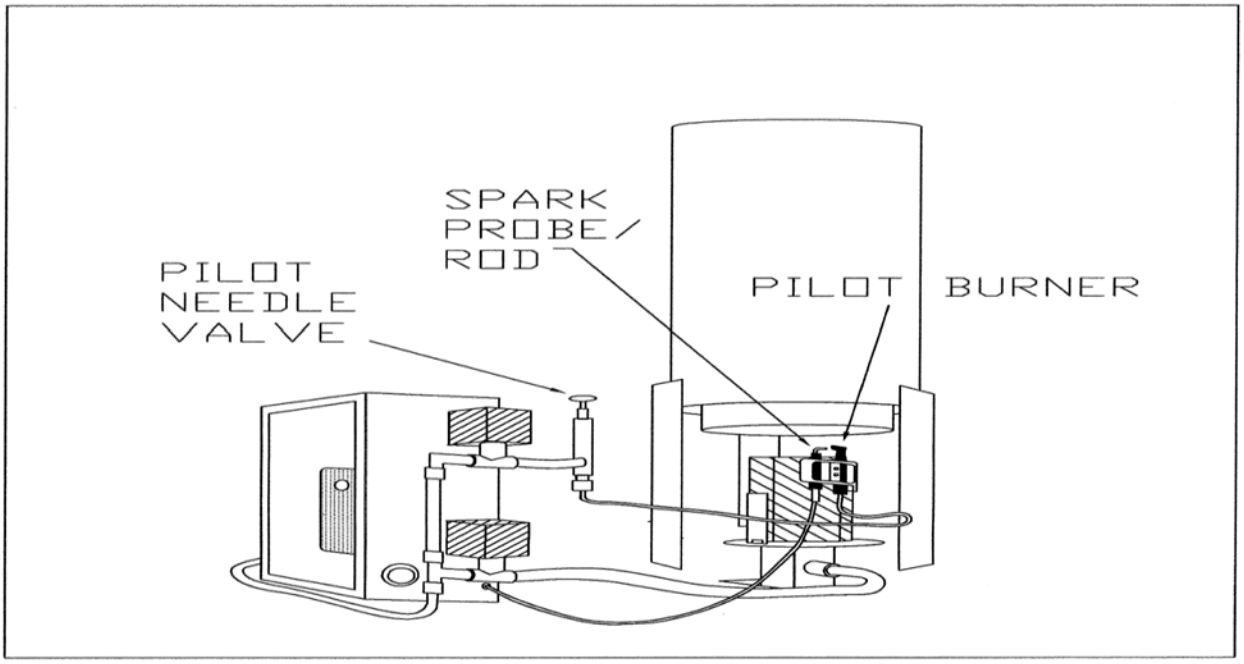

8.9 Installation and start-up are now complete. Turn off power to processor. Replace lid on electrical panel, Shell, and Weather Cover. If desired, the station owner can add padlocks to prevent tampering, see FIGURE 12 below. Ensure the 3/4" ball valve at the processor inlet is in the locked open position (Opened to UST Ullage). Turn on power to processor. The processor is now in normal, automatic mode.

FIGURE 12

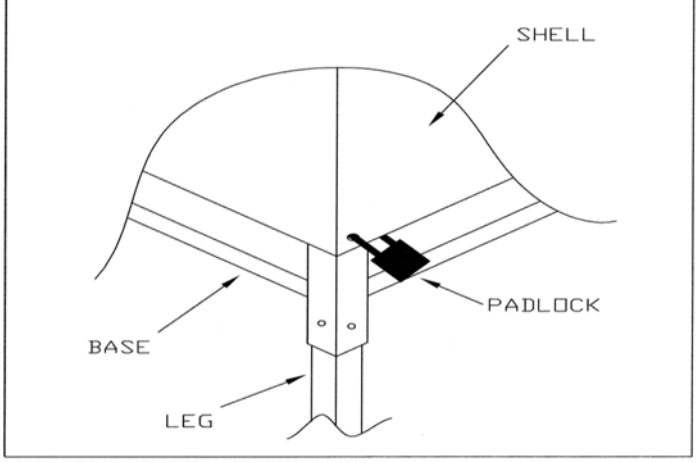

9. MAINTENANCE INSTRUCTIONS

The Hirt VCS 100 vapor processor must be inspected and tested annually. The technician must complete the Hirt VCS 100 Annual Inspection Checklist (reference section 6 of VR-207 IOM) and leave with the site's maintenance records.

10. REPAIR AND REPLACEMENT OF COMPONENTS

Any Hirt VCS 100 system components which have failed cannot be repaired. Failed components must be replaced. In order to maintain the product warranty, use only genuine Hirt replacement parts. Each component comes with its own written instructions covering replacement and testing to insure proper installation and operation.

11. PRODUCT WARRANTY

- HCE warrants the workmanship and materials to be free from defects and will comply with the performance standards of California ARB CP-201 for a period of one (1) year from the date of installation or from date of shipment from HCE, if registration card is not returned.
- Liability under any implied or expressed warranty is limited to replacement of the product.
- HCE is not responsible for improperly installed or misuse of the product.
- HCE cannot be held responsible for damage to the product or its equipment due to acts of nature, vandalism, or neglect.
- HCE products are warranted to be free of defects in material and workmanship.
- In the event of a warranty claim, the purchaser must obtain a Return Authorization Number prior to returning product. All shipping costs are the responsibility of the customer.
- HCE shall repair or replace, at its option, any HCE component which proves to be defective.
- The cost of labor for any field repair, removal, replacement, or diagnosis is not covered by this warranty.
- The liability of HCE is limited solely and specifically to this warranty.

- HCE shall not be liable for any special, collateral, or consequential damages arising from this warranty, the use of this equipment or from any order accepted pursuant thereto.
- The use of parts not authorized by HCE voids the warranty.
- Installation, start-up, service, or repairs of this product by personnel not certified by HCE voids the above described warranty.